z/OS

Language Environment Programming Guide

Version 2 Release 1

SA38-0682-01

Note
Before using this information and the product it supports, read the information in "Notices" on page 603.

This edition applies to Version 2 Release 1 of z/OS (5650-ZOS) and to all subsequent releases and modifications until otherwise indicated in new editions.

© Copyright IBM Corporation 1991, 2015.
US Government Users Restricted Rights – Use, duplication or disclosure restricted by GSA ADP Schedule Contract with IBM Corp.

Contents

Figures xi

Tables xiii

About this document xv
Using your documentation xv
How to read syntax diagrams xvii
Symbols xvii
Syntax items xvii
Syntax examples xviii
This Programming Guide xix

How to send your comments to IBM xxi
If you have a technical problem xxi

Summary of changes xxiii
Summary of changes for z/OS Version 2 Release 1 (V2R1) as updated February, 2015 xxiii
z/OS Version 2 Release 1 summary of changes xxiii

Part 1. Creating applications with Language Environment 1

Chapter 1. Introduction to Language Environment 3
Components of Language Environment 3
Common runtime environment of Language Environment 4

Chapter 2. Preparing to link-edit and run under Language Environment 7
Understanding Language Environment library routines 7
Planning to link-edit and run 8
Link-editing single-language applications 9
Link-editing ILC applications 10
Downward compatibility considerations 10
Checking which runtime options are in effect . . . 13
HLL compatibility considerations 13
C/C++ AMODE/RMODE considerations 14
COBOL considerations. 14
Replacing COBOL library routines in a COBOL load module 14
Using Language Environment resident routines for callable services 15
Fortran considerations 15
Replacing Fortran runtime library modules in a Fortran executable program 15
Using the Fortran library module replacement tool 16
Resolving static common block name conflicts . . 16
Resolving library module name conflicts between Fortran and C 17
PL/I considerations 24
Link-editing PL/I subroutines for later use . . . 24
Replacing PL/I library routines in an OS PL/I executable program. 25
Link-editing fetchable executable programs . . . 25
PL/I link-time considerations 26
Fetching modules with different AMODEs . . . 26

Chapter 3. Using Extra Performance Linkage (XPLINK) 29
What is XPLINK? 29
Objectives 29
Support for XPLINK 30
XPLINK concepts and terms. 30
The XPLINK stack 31
When XPLINK should be used 36
When XPLINK should not be used 36
How is XPLINK enabled? 37
XPLINK compiler option 37
XPLINK runtime option 37
Building and running an XPLINK application . . . 38
Other considerations 39
XPLINK / non-XPLINK compatibility 40
XPLINK restrictions 40

Chapter 4. Building and using dynamic link libraries (DLLs) 43
Support for DLLs 43
DLL concepts and terms 44
Loading a DLL 45
Loading a DLL implicitly 45
Loading a DLL explicitly 45
Managing the use of DLLs when running DLL applications 51
Loading DLLs 51
Sharing DLLs. 52
Freeing DLLs 53
Creating a DLL or a DLL application 53
Building a simple DLL 53
Writing DLL code 53
Compiling your DLL code 57
Binding your DLL code 58
Building a simple DLL application. 60
Creating and using DLLs 63
DLL restrictions 64
Improving performance 66
Building complex DLLs 66

Chapter 5. Link-editing, loading, and running under batch 69
Basic link-editing and running under batch 69
Accepting the default runtime options 69
Overriding the default runtime options 70

© Copyright IBM Corp. 1991, 2015

Specifying runtime options with the CEEOPTS DD card 70
Specifying runtime options in the EXEC statement 71
Providing link-edit input 71
Writing JCL for the link-edit process 72
Binder control statements 76
Link-edit options 77
Loading your application using the loader 77
Writing JCL for the loader 78
Invoking the loader with the EXEC statement . . 79
Using the PARM parameter for loader options. . 79
Requesting loader options 79
Passing parameters through the loader 79
Using DD statements for the standard loader data sets 80
Running an application under batch 80
Program library definition and search order . . 81
Specifying runtime options under batch 82

Chapter 6. Creating and executing programs under TSO/E 83
Basic link-editing and running under TSO/E . . . 83
Accepting the default runtime options 83
Overriding the default runtime options 83
Specifying runtime options with the CEEOPTS DD card 84
Link-editing and running 84
Link-editing your application using the LINK command 84
Using CMOD CLIST to invoke the TSO/E LINK command 85
Using the CALL command to run your application 87
TSO/E parameter list format 88
Loading and running using the LOADGO command 88
Allocating data sets under TSO/E 89
Example of using LOADGO 89
Link-edit and loader options. 89
Using the iconv utility and ICONV CLIST for C/C++ 90
Using the genxlt utility and GENXLT CLIST for C/C++ 91
Running your application under TSO/E 91

Chapter 7. Creating and executing programs using z/OS UNIX System Services 93
Basic link-editing and running C/C++ applications under z/OS UNIX 93
Invoking a shell from TSO/E 94
Using the z/OS UNIX c89 utility to link-edit and create executable files 94
Running z/OS UNIX C/C++ application programs 94
z/OS UNIX application program environments 95
Placing an MVS application executable program in the file system 95
Restriction on using 24-Bit AMODE programs . . 95
Running an MVS executable program from a z/OS UNIX shell 95
Running POSIX-enabled programs. 96
Running COBOL programs under z/OS UNIX . . 98
Basic link-editing and running PL/I routines under z/OS UNIX with POSIX(ON) 99
Basic link-editing and running PL/I MTF applications under z/OS UNIX 101

Chapter 8. Using IBM-supplied cataloged procedures 103
Invoking cataloged procedures 103
Step names in cataloged procedures 103
Unit names in cataloged procedures 104
Data set names in cataloged procedures . . . 104
IBM-supplied cataloged procedures 105
CEEWG — Load and run a Language Environment conforming non XPLINK program . 108
CEEWL — Link a Language Environment conforming non XPLINK program 108
CEEWLG — Link and run a Language Environment conforming non-XPLINK program . 109
CEEXR — Load and run a Language Environment conforming XPLINK program . . 110
CEEXL — Link-edit a Language Environment conforming XPLINK program 110
CEEXLR — Link and run a Language Environment conforming XPLINK program . . 111
AFHWL — Link a program written in Fortran 112
AFHWLG — Link and run a program written in Fortran 113
AFHWN — Resolving name conflicts between C and Fortran 114
Modifying cataloged procedures 115
Overriding and adding to EXEC statements . . 115
Overriding and adding DD statements 115
Overriding generic link-edit procedures for constructed reentrant programs 116

Chapter 9. Using runtime options . . . 119
Methods available for specifying runtime options 119
Order of precedence 122
Order of precedence examples. 123
Specifying suboptions in runtime options 123
Specifying runtime options and program arguments 123
Creating application-specific runtime option defaults with CEEXOPT 124
CEEXOPT invocation for CEEUOPT 126
CEEXOPT coding guidelines for CEEUOPT . . 126
Using the CEEOPTS DD statement 127
Runtime compatibility considerations 129
C and C++ compatibility considerations . . . 129
COBOL compatibility considerations 129
Fortran compatibility considerations. 130
PL/I compatibility considerations 130
IMS compatibility considerations 130

Part 2. Preparing an application to run with Language Environment . . 131

Chapter 10. Using Language Environment parameter list formats . . 133
Argument lists and parameter lists 134
Passing arguments between routines 134
Preparing your main routine to receive parameters 136
PL/I argument passing considerations 140

Chapter 11. Making your application reentrant 141
Making your C/C++ program reentrant 141
Natural reentrancy 141
Constructed reentrancy 141
Generating a reentrant program executable for C or C++ 142
Making your COBOL program reentrant 142
Making your Fortran program reentrant 142
Making your PL/I program reentrant 143
Installing a reentrant load module 143

Part 3. Language Environment concepts, services, and models . . 145

Chapter 12. Initialization and termination under Language Environment. 147
The basics of initialization and termination . . . 147
Language Environment initialization 148
What happens during initialization 149
Language Environment termination 150
What causes termination 150
What happens during termination 151
Managing return codes in Language Environment 153
How the Language Environment enclave return code is calculated 153
Setting and altering user return codes 154
Termination behavior for unhandled conditions 156
Determining the abend code 157

Chapter 13. Program management model. 161
Model terminology for Language Environment program management 161
Language Environment terms and their HLL equivalents 161
Terminology for data 162
Processes 163
Enclaves 164
The enclave defines the scope of language semantics. 164
Additional enclave characteristics 165
Threads 165
The full Language Environment program management model 165
Mapping the POSIX program management model to the Language Environment program management model 166
Key POSIX program entities and Language Environment counterparts 166
Scope of POSIX semantics 167

Chapter 14. Stack and heap storage 169
How Language Environment-conforming languages uses stack and heap storage 169
Stack storage overview 170
Tuning stack storage 171
COBOL storage considerations 172
PL/I storage considerations 172
Heap storage overview 172
Using HEAPPOOLS to improve performance 174
Heap IDs recognized by the Language Environment heap manager 175
AMODE considerations for heap storage . . . 176
Tuning heap storage 176
Storage performance considerations 177
Dynamic storage services 177
Examples of callable storage services 178
C example of building a linked list 178
COBOL example of building a linked list . . . 180
PL/I example of building a linked list 182
C example of storage management 184
COBOL example of storage management . . . 186
PL/I example of storage management 187
User-created heap storage 190
Alternative Vendor Heap Manager 190
Using _CEE_HEAP_MANAGER to invoke the alternative Vendor Heap Manager 190

Chapter 15. Introduction to Language Environment condition handling . . . 193
Concepts of Language Environment condition handling 193
The stack frame model 195
Handle cursor 195
Resume cursor 196
What is a condition in Language Environment? 196
Steps in condition handling 196
Enablement step 197
Condition step 199
Termination imminent step 202
Invoking condition handlers 205
Responses to conditions 206
Condition handling scenarios 207
Scenario 1: Simple condition handling 207
Scenario 2: User-written condition handler present for T_I_U 208
Scenario 3: Condition handler present for divide-by-zero 210

Chapter 16. Language Environment and HLL condition handling interactions 211
C condition handling semantics 211
Comparison of C-Language Environment terminology 212
Controlling condition handling in C 213
C condition handling actions 214
C signal representation of S/370 exceptions . . 218
C++ condition handling semantics 219

COBOL condition handling semantics 219
COBOL condition handling examples 220
Resuming execution after an IGZ condition occurs 223
Resuming execution after a COBOL STOP RUN statement. 223
Reentering COBOL programs after stack frame collapse 224
Handling fixed-point and decimal overflow conditions 224
Fortran Condition handling semantics 224
Arithmetic program interruptions from vector instructions 224
Restrictions on using vector instructions in user-written condition handlers 225
PL/I condition handling semantics 226
PL/I condition handling actions 226
Promoting conditions to the PL/I ERROR condition 227
Mapping non-PL/I conditions to PL/I conditions 227
Additional PL/I condition handling considerations 228
PL/I condition handling example 228
Language Environment and POSIX signal handling interactions 230
Synchronous POSIX signal and Language Environment condition handling interactions . . 231

Chapter 17. Coding a user-written condition handler 235
PL/I considerations 235
Invocation of a procedure registered as a user handler 236
Types of conditions you can handle 236
User-written condition handler interface 236
Registering user-written condition handlers using USRHDLR 238
Nested conditions 239
Nested conditions in applications containing a COBOL program 240
Using Language Environment condition handling with nested COBOL programs . . . 240
Examples with a registered user-written condition handler 241
Handling a divide-by-zero condition in C, C++, COBOL, or PL/I 241
Handling an out-of-storage condition in C, C++, COBOL, or PL/I 249
Signaling and handling a condition in a C/C++ routine 259
Handling a divide-by-zero condition in a COBOL program 261
Handling a program check in an assembler routine 265

Chapter 18. Using condition tokens 271
The basics of using condition tokens 271
The effect of coding the fc parameter 272
Testing a condition token for success 272
Testing condition tokens for equivalence . . . 273
Testing condition tokens for equality 273
Effects of omitting the fc parameter 273
Understanding the structure of the condition token 274
Using symbolic feedback codes 275
Locating symbolic feedback codes for conditions 275
Including symbolic feedback code files 276
Examples using symbolic feedback codes . . . 277
Condition tokens for C signals under C and C++ 282
q_data structure for abends. 283
Usage notes 284
Example illustrating retrieval of q_data. . . . 284
q_data structure for arithmetic program interruptions 286
Usage notes 288
q_data structure for square-root exception 289
q_data structure for math and bit-manipulation conditions 289
Usage notes 293
Format of q_data descriptors 293

Chapter 19. Using and handling messages 295
How Language Environment messages are handled 295
Creating messages. 296
Creating a message source file. 296
Using the CEEBLDTX utility 299
Files created by CEEBLDTX 301
Creating a message module table. 304
Assigning values to message inserts 306
Interpreting runtime messages. 307
Specifying national languages 309
Runtime messages with POSIX 309
Handling message output 310
Using Language Environment MSGFILE . . . 310
Using MSGFILE under z/OS UNIX 311
Using C or C++ I/O functions. 312
Using COBOL I/O statements 313
Using Fortran I/O statements 314
Using PL/I I/O statements. 316
MSGFILE considerations when using PL/I . . 316
Examples using multiple message handling callable services 317
C/C++ example calls to CEEMOUT, CEENCOD, CEEMGET, CEEDCOD, and CEEMSG 317
COBOL example calls to CEEMOUT, CEENCOD, CEEMGET, CEEDCOD, and CEEMSG 319
PL/I example calls to CEEMOUT, CEENCOD, CEEMGET, CEEDCOD, and CEEMSG 321

Chapter 20. Using date and time services. 325
The basics of using date and time services. . . . 325
Working with date and time services 326
Date limits 326
Picture character terms and picture strings . . 327
Notation for eras 327
Performing calculations on date and time values 327
Century window routines 328

National Language Support for date and time services 329
Examples using date and time callable services . . 329
Examples illustrating calls to CEEQCEN and CEESCEN 329
Examples illustrating calls to CEESECS. . . . 332
Examples illustrating calls to CEESECS and CEEDATM 336
Examples illustrating calls to CEESECS, CEESECI, CEEISEC, and CEEDATM. 340
Examples illustrating calls to CEEDAYS, CEEDATE, and CEEDYWK. 346
Calls to CEECBLDY in COBOL 352

Chapter 21. National language support 355
Customizing Language Environment output for a given country 355
Setting the national language 356
Setting the country code. 356
Euro support 356
Combining national language support and date and time services 357
Calls to CEE3CTY, CEEFMDT, and CEEDATM in C 357
Calls to CEE3CTY, CEEFMDT, and CEEDATM in COBOL 358
Example using CEE3CTY, CEEFMDT, and CEEDATM in PL/I 360

Chapter 22. Locale callable services 363
Customizing Language Environment locale callable services 363
Developing internationalized applications 364
Examples of using locale callable services 364
Example calls to CEEFMON 364
Example calls to CEEFTDS 366
Example calls to CEELCNV and CEESETL . . 369
Example calls to CEEQDTC and CEESETL . . 372
Example calls to CEESCOL. 375
Example calls to CEESETL and CEEQRYL. . . 377
Example calls to CEEQRYL and CEESTXF. . . 379

Chapter 23. General callable services 383
List of the general callable services 383
CEE3DMP callable service 383
CEE3USR callable service 384
CEEGPID callable service 384
CEEGTJS callable service 384
CEERAN0 callable service 385
CEEENV callable service 385
CEE3DLY callable service 385
CEEDLYM callable service 385
CEETEST callable service 385
Using basic callable services 385

Chapter 24. Math services 389
What Language Environment math services does 389
Related services 389
Call interface to math services. 391
Parameter types: parm1 type and parm2 type 391
Examples of calling math services 392
Calling CEESSLOG in C and C++ 392
Calling CEESSLOG in COBOL. 393
Calling CEESSLOG in PL/I. 394

Part 4. Using interfaces to other products 395

Chapter 25. Running applications under CICS 397
Terminology used in the Language Environment program model. 397
CICS region 397
CICS transaction 397
CICS run unit 398
Running Language Environment applications under CICS 398
Developing an application under CICS 398
PL/I coding considerations under CICS . . . 399
Assembler considerations 400
Link-edit considerations under CICS 400
CICS processing program table (PPT) considerations 401
Specifying runtime options under CICS . . . 401
Accessing DLI databases from CICS. 403
Using callable services under CICS 403
OS/VS COBOL compatibility considerations under CICS 404
Using math services in PL/I under CICS . . . 404
Coding program termination in PL/I under CICS 404
Storage management under CICS. 404
CICS short-on-storage condition 404
CICS storage protect facility 405
PL/I storage considerations under CICS . . . 405
Condition handling under CICS 406
PL/I considerations for using the CICS HANDLE ABEND command 406
Effect of the CICS HANDLE ABEND command 407
Effect of the CICS HANDLE CONDITION and CICS HANDLE AID 407
Restrictions on user-written condition handlers under CICS 407
CICS transaction abend codes 408
Using the CBLPSHPOP runtime option under CICS 408
Restrictions on assembler user exits under CICS 408
Ensuring transaction rollback under CICS . . . 409
Runtime output under CICS 409
Message handling under CICS. 409
Dump services under CICS. 410
Support for calls within the same HLL under CICS 411
C 411
C++ 411
COBOL 411
PL/I 412

Chapter 26. Running applications under DB2. 413
Language Environment support for DB2 applications 413
Condition handling under DB2 413
PL/I consideration for DB2 applications 413

Chapter 27. Running applications under IMS 415
Using the interface between Language Environment and IMS 415
z/OS XL C/C++ considerations under IMS . . . 415
C++ considerations under IMS 416
PL/I considerations under IMS 416
IMS communication with your application . . . 417
Link-edit considerations under IMS 417
Making your IMS application reentrant. 417
Condition handling under IMS 417
Coordinated condition handling under IMS . . 417
Diagnosing abends with the IMS dump . . . 418

Part 5. Specialized programming tasks 419

Chapter 28. Using runtime user exits 421
User exits supported under Language Environment 421
Using the assembler user exit CEEBXITA . . . 422
Using the HLL initialization exit CEEBINT . . 422
PL/I and C compatibility 423
Using sample assembler user exits 423
When user exits are invoked 424
CEEBXITA behavior during enclave initialization. 426
CEEBXITA behavior during enclave termination 426
CEEBXITA behavior during process termination 426
Specifying abend codes to be percolated by Language Environment 427
Actions taken for errors that occur within the exit. 427
CEEBXITA assembler user exit interface 427
Guidelines for using CEEBXITA 428
Parameter values in the assembler user exit . . 432
CEEBINT high-level language user exit interface 435

Chapter 29. Assembler considerations 439
Compatibility considerations 439
Control blocks 439
Save areas 440
CICS 440
C and Fortran duplicate names 440
Register conventions 441
Language Environment-conforming assembler 441
Non-Language Environment conforming assembler routines. 442
Considerations for coding or running assembler routines 442
Asynchronous interrupts 442
Condition handling 443
Access to the Inbound Parameter String . . . 443
Overlay Programs 443
CEESTART, CEEMAIN, and CEEFMAIN . . . 443
Mode considerations 444
Language Environment library routine retention (LRR) 444
Using library routine retention 445
Library routine retention and preinitialization 445
CEELRR macro — Initialize or terminate Language Environment library routine retention. 446
Assembler macros 448
CEEENTRY macro— Generate a Language Environment-conforming prolog 449
CEETERM macro — Terminate a Language Environment-conforming routine 452
CEECAA macro — Generate a CAA mapping 453
CEEDSA macro — Generate a DSA mapping 453
CEEPPA macro — Generate a PPA 454
CEELOAD macro — Dynamically load a Language Environment-conforming routine . . 456
CEEFETCH macro — Dynamically load a routine 459
CEEFTCH macro — Generate a FTCHINFO mapping 463
CEEGLOB macro — Extract Language Environment product information 466
CEERELES macro — Dynamically delete a routine 467
CEEPCALL macro — Call a Language Environment-conforming routine 468
CEEPDDA macro — Define a data item in the writeable static area (WSA). 470
CEEPLDA macro — Returns the address of a data item defined by CEEPDDA 472
Example of assembler main routine 472
Example of an assembler main calling an assembler subroutine. 473
DSPARM subroutine example 474
Invoking callable services from assembler routines 476
System Services available to assembler routines 476
Using the ATTACH macro 478
Using the SVC LINK macro 480

Chapter 30. Using preinitialization services. 481
Using preinitialization 482
Using the PreInit table 482
Reentrancy considerations 484
PreInit XPLINK considerations 485
User exit invocation 486
Stop semantics 487
Preinitialization interface 488
Initialization. 489
Application invocation 497
Service routines 514
An example program invocation of CEEPIPI . . . 521
HLLPIPI examples 523

Chapter 31. Using nested enclaves 525
Creating child enclaves 525
XPLINK considerations 526

COBOL considerations 526
PL/I considerations 526
Determining the behavior of child enclaves . . . 526
Creating child enclaves with EXEC CICS LINK or EXEC CICS XCTL 526
Creating child enclaves by calling a second main program 527
Creating child enclaves using SVC LINK . . . 528
Creating child enclaves using the C system() function 530
Creating child enclaves containing a PL/I fetchable main 531
Other nested enclave considerations 532
What the enclave returns from CEE3PRM and CEE3PR2 533
Finding the return and reason code from the enclave 534
Assembler user exit 535
Message file 535
COBOL multithreading considerations 535
z/OS UNIX considerations 535
AMODE considerations 535

Part 6. Appendixes 537

Appendix A. Prelinking an application 539
Which programs need to be prelinked 539
What the prelinker does 540
Prelinking process 541
References to currently unresolved symbols (unresolved external references) 542
Processing the prelinker automatic library call 543
Language Environment prelinker map 543
Control statement processing 546
IMPORT control statement 546
INCLUDE control statement 547
LIBRARY control statement. 547
RENAME control statement 548
Mapping L-Names to S-Names 549
Starting the Prelinker under batch and TSO/E . . 551
Under batch 551
Under TSO/E 551
Using the CXXBIND EXEC under TSO/E . . . 554
Using the CXXMOD EXEC under TSO/E . . . 554
Prelinker options 556

Appendix B. EXEC DLI and CALL IMS Interfaces 559

Appendix C. Guidelines for writing callable services 561

Appendix D. Operating system and subsystem parameter list formats . . 563
C and C++ parameter passing considerations. . . 563
C PLIST and EXECOPS Interactions 565
C++ PLIST and EXECOPS Interactions 567
Case sensitivity under TSO 569
Parameter passing considerations with XPLINK C and C++ 569
COBOL parameter passing considerations 569
PL/I main procedure parameter passing considerations 571

Appendix E. Object library utility . . . 573
Creating an object library 573
Under batch 573
Under TSO 574
Object library utility map 575

Appendix F. Using the systems programming environment 579
Building freestanding applications 579
Special considerations for reentrant modules . . . 581
Notes 582
Building system exit routines 583
Building persistent C environments 583
Building user-server environments 583
Summary. 583

Appendix G. Sort and merge considerations 587
Invoking DFSORT directly 587
Using the COBOL SORT and MERGE verbs . . . 587
User exit considerations 588
Condition handling considerations 588
Using the PL/I PLISRTx interface 589
User exit considerations 589
Condition handling considerations 590

Appendix H. Running COBOL programs under ISPF 593

Appendix I. Language Environment macros 595

Appendix J. PL/I macros that activate variables 597

Appendix K. Accessibility 599
Accessibility features 599
Consult assistive technologies 599
Keyboard navigation of the user interface 599
Dotted decimal syntax diagrams 599

Notices 603
Policy for unsupported hardware. 604
Minimum supported hardware 605
Programming interface information 605
Trademarks 605

Index 607

Figures

1. Components of Language Environment . . . 4
2. The common runtime environment of Language Environment . . . 5
3. Replacing VS FORTRAN run-time library modules under batch, using CEEWL . . . 16
4. Replacing VS FORTRAN run-time library modules under TSO/E, using a CLIST . . . 16
5. Changing conflicting names in an executable program under MVS . . . 19
6. Changing conflicting names in several executable programs under MVS . . . 20
7. Changing conflicting names in an executable program under TSO/E . . . 20
8. Changing conflicting names in several executable programs under TSO/E . . . 21
9. Changing conflicting names in multiple executable programs under MVS . . . 21
10. Changing conflicting names in multiple executable programs under TSO/E . . . 22
11. Replacing Fortran routines with Language Environment routines under MVS . . . 22
12. Replacing Fortran routines with Language Environment routines under TSO/E . . . 23
13. Relink-editing an executable program to resolve conflicting names under batch . . . 24
14. Relink-editing an executable program to resolve conflicting names under TSO/E . . . 24
15. Example of link-editing a fetchable executable program . . . 26
16. Standard stack storage model . . . 32
17. XPLINK stack storage model . . . 32
18. XPLINK stack frame layout . . . 33
19. Using #pragma export to create a DLL executable module named BASICIO . . . 54
20. Using #pragma export to create a DLL executable module TRIANGLE . . . 55
21. Using _export to create DLL executable module TRIANGLE . . . 55
22. Using Language Environment macros to create an assembler DLL executable named ADLLBEV2 . . . 57
23. COBOL DLL application calling a COBOL DLL 62
24. Assembler DLL application calling an assembler DLL . . . 63
25. Summary of DLL and DLL application preparation and usage . . . 64
26. Accepting the default runtime options under batch . . . 70
27. Overriding the default runtime options under batch . . . 70
28. Overriding the default runtime options for COBOL . . . 70
29. Basic batch link-edit processing . . . 72
30. Creating a non-XPLINK executable program under batch . . . 75
31. Creating an XPLINK executable program under batch . . . 75
32. Using the INCLUDE linkage editor control statement . . . 76
33. Using the LIBRARY linkage editor control statement . . . 76
34. Basic loader processing . . . 78
35. JCL for creating an executable program 80
36. Cataloged procedure CEEWG, which loads and runs a program written in any Language Environment-conforming HLL . . . 108
37. Cataloged procedure CEEWL, which link-edits a program written in any Language Environment-conforming HLL . . . 109
38. Cataloged procedure CEEWLG, which link-edits and runs a program written in any Language Environment-conforming HLL . . . 109
39. Cataloged procedure CEEXR, which loads and runs a program-compiled XPLINK . . . 110
40. Cataloged procedure CEEXL, which link-edits a program-compiled XPLINK . . . 111
41. Cataloged procedure CEEXLR, which link-edits and runs a program-compiled XPLINK . . . 112
42. Using AFHWL to link a program written in Fortran . . . 113
43. Procedure AFHWLG, used to link and run a program written in Fortran . . . 114
44. Cataloged procedure AFHWN, used in resolving name conflicts . . . 114
45. Overriding parameters in the CEEWLG cataloged procedure . . . 116
46. Sample Invocation of CEEXOPT within CEEUOPT source program . . . 125
47. Example syntax for the CEEOPTS DD statement . . . 128
48. Call terminology refresher . . . 134
49. Argument passing styles in Language Environment . . . 135
50. Language Environment ILC — only one runtime environment to initialize . . . 149
51. Program management model illustration of resource ownership . . . 163
52. Overview of the full Language Environment program management model . . . 166
53. Scope of semantics against POSIX processes and Language Environment processes and enclaves . . . 168
54. Language Environment stack storage model 171
55. Language Environment heap storage model 174
56. Condition processing . . . 200
57. Queues of user-written condition handlers 205
58. Scenario 1: Division by zero with no user condition handlers present . . . 207

© Copyright IBM Corp. 1991, 2015

59. Scenario 2: Division by zero with a user-written condition handler present in routine A 209
60. Scenario 3: Division by zero with a user handler present in routine B 210
61. C370A routine 216
62. C370B routine 216
63. C370C routine 217
64. C condition handling example 217
65. COBOLA program 221
66. COBOLB program 222
67. COBOLC program 223
68. PL/I condition processing 226
69. Enablement step for signals under z/OS UNIX 232
70. Parameter declarations in a PL/I user-written condition handler 236
71. Restricted type_of_move If COBOL nested programs are present 241
72. Handle and resume cursor movement as a condition is handled 242
73. DIVZERO program (COBOL) 245
74. Language Environment condition token 274
75. C/C++ example testing for CEEGTST symbolic feedback code CEE0P3 278
76. COBOL example testing for CEESDEXP symbolic feedback code CEE1UR 279
77. Wrong placement of COBOL COPY statements for testing feedback code 280
78. PL/I example testing for symbolic feedback code CEE000 281
79. Structure of abend qualifying data 284
80. q_data structure for arithmetic program interruption conditions 287
81. q_data structure for math and bit manipulation routines. 290
82. Format of a q_data descriptor 293
83. Example of a message source file 296
84. Example of a message module table with one language 305
85. Example of a message module table with two languages 305
86. Example of assigning values to message inserts 307
87. Directing output messages 315
88. Performing calculations on dates 328
89. Default century window 328
90. Using CEESCEN to change the century window 328
91. z/OS XL C/C++ routine with a call to CEEFMDT 386
92. COBOL program with a call to CEEFMDT 387
93. PL/I routine with a call to CEEFMDT 388
94. C/C++ call to CEESSLOG — Logarithm base e 392
95. Call to CEESSLOG — Logarithm base e in COBOL 393
96. Call to CEESSLOG — Logarithm base e in PL/I 394
97. Format of messages sent to CESE 410
98. Location of user exits 425
99. Interface for the CEEBXITA assembler user exit 428
100. CEEAUE_FLAGS format 430
101. Exit_list and hook_exit control blocks 437
102. Example calling routine named Bif5 with no parameters: 470
103. Example calling routine named Bif5 passing 5 integer parameters: 470
104. Example of a simple main assembler routine 473
105. Sample invocation of a callable service from assembler 476
106. Issuing an ATTACH to Language Environment-conforming routines. 478
107. A dynamically-called COBOL program that dynamically calls another COBOL program . 480
108. Format of service routine vector 514
109. Basic prelinker and linkage editor processing 542
110. Example of prelinking under batch 553
111. Example of prelinking under TSO/E 553
112. Alternate C/C++ parameter passing styles 563
113. Accessing parameters using macros __R1 and __osplist 564
114. Examples of casting and dereferencing 565
115. Object library utility map 576
116. Specifying alternate initialization at link-edit time 579
117. Simple freestanding routine 580
118. Link-edit control statements used to build a freestanding MVS routine 580
119. Compile and link using EDCCL 581
120. Sample reentrant freestanding routine 581
121. Building and running a reentrant freestanding MVS routine 582

Tables

1. How to use z/OS Language Environment publications xvi
2. Syntax examples xviii
3. Prerequisite OS/390 release level for the various compilers that support downward compatibility 11
4. Fortran and C library routine names that are identical 17
5. Conflicting names per product and release 18
6. Decision table for name conflict resolution 18
7. Comparing non-XPLINK and XPLINK register conventions 35
8. Required data sets used for link-editing 73
9. Optional data sets used for link-editing 74
10. Selected link-edit options 77
11. Selected loader options. 79
12. Standard loader data sets 80
13. CMOD calls 86
14. Selected loader options. 90
15. IBM-supplied cataloged procedures 105
16. Formats for specifying runtime options and program arguments 123
17. Semantic terms and methods for passing arguments in Language Environment . . . 135
18. Default passing style per HLL 135
19. Coding a main routine to receive an inbound parameter list in TSO/E 136
20. Coding a main routine to receive an inbound parameter list in IMS 138
21. Coding a main routine to receive an inbound parameter list in CICS 138
22. Coding a main routine to receive an inbound parameter list in MVS. 139
23. Fortran reentrancy separation tool and Language Environment cataloged procedures . 143
24. Return code modifiers used by Language Environment to determine enclave return codes 155
25. Summary of enclave reason codes. 156
26. Termination behavior for unhandled conditions of severity 2 or greater. 157
27. Abend codes used by Language Environment when the Assembler user exit requests an abend 157
28. Abend code values used by Language Environment with ABTERMENC(ABEND) . . 158
29. Program interrupt abend and reason codes in a non-CICS environment. 158
30. Usage of stack and heap storage by Language Environment-conforming languages 169
31. Runtime options and functions. 169
32. Runtime options and functions. 170
33. Heap IDs recognized by Language Environment heap manager. 175
34. Default responses to unhandled conditions 201
35. T_I_U condition representation 202
36. T_I_S condition representation 203
37. C conditions and default system actions 212
38. Mapping of S/370 exceptions to C signals 218
39. Mapping of abend signals to C signals 219
40. Valid result codes from user-written condition handlers 237
41. Designating requested fixup actions 238
42. Symbolic feedback codes associated with CEEGTST 276
43. Language Environment condition tokens and non-POSIX C signals 282
44. Language Environment condition tokens and POSIX C signals 282
45. Arithmetic program interruptions and corresponding conditions 286
46. Square-root exception and corresponding condition 289
47. Abbreviations of math operations in q_data structures 292
48. q_data descriptor data types 294
49. Language Environment runtime message severity codes 308
50. Condition tokens with POSIX 309
51. Operating system, SYSOUT definitions, MSGFILE default attributes 311
52. Defining an I/O device for a ddname 311
53. C and C++ message output 313
54. C/C++ Redirected stream output 313
55. Allowable OPEN statement specifiers 315
56. Language Environment locale callable services and equivalent C library routines . . 363
57. Runtime option behavior under CICS 401
58. User exits supported under Language Environment. 421
59. Interaction of assembler user exits 423
60. Sample assembler user exits for Language Environment. 423
61. Parameter values in the assembler user exit (Part 1) 432
62. Parameter values in the assembler user exit (Part 2) 434
63. C external names and their analogous Fortran names 440
64. Structure of version 1 CEEFTCH 464
65. Cross reference for version 1 CEEFTCH 465
66. Equivalent host services provided by Language Environment 477
67. Invocation of user exits during process and enclave initialization and termination . . . 487
68. Preinitialization services accessed using CEEPIPI 488
69. pipi_environment mask values. 511
70. program_attributes mask values 512
71. Return and reason codes. 515
72. Return and reason codes. 516
73. Return and reason codes. 517

© Copyright IBM Corp. 1991, 2015

74. Return and reason codes 517
75. Return and reason codes 518
76. Parameters for language environment condition handler 519
77. Return and reason codes 519
78. Return and reason codes 521
79. Handling conditions in child enclaves 528
80. Unhandled condition behavior in a C, C++, or assembler child enclave 529
81. Unhandled condition behavior in a COBOL child enclave 529
82. Unhandled condition behavior in a Fortran or PL/I child enclave 529
83. Unhandled condition behavior in a system()-created child enclave 531
84. Unhandled condition behavior in a child enclave that contains a PL/I fetchable main . 532
85. Determining the command-line equivalent 533
86. Determining the order of runtime options and program arguments 534
87. Prelinker options 556
88. IMS and CICS support of user interfaces to DL/I databases 559
89. Interactions of C PLIST and EXECOPS 566
90. Interactions of C++ PLIST and EXECOPS (compiler options) 568
91. Case sensitivity of arguments under TSO 569
92. Interactions of SYSTEM and NOEXECOPS 572
93. Summary of types 583
94. DFSORT exit called as a function of a PLISRTx interface call 590
95. Variables activated by PL/I macros 597

About this document

This document supports z/OS (5650-ZOS).

IBM® z/OS Language Environment (also called Language Environment) provides common services and language-specific routines in a single run-time environment for C, C++, COBOL, Fortran (z/OS only; no support for z/OS UNIX System Services or CICS®), PL/I, and assembler applications. It offers consistent and predictable results for language applications, independent of the language in which they are written.

Language Environment is the prerequisite run-time environment for applications generated with the following IBM compiler products:
- z/OS XL C/C++ (feature of z/OS)
- z/OS® C/C++
- OS/390® C/C++
- C/C++ for MVS/ESA
- C/C++ for z/VM®
- XL C/C++ for z/VM
- AD/Cycle C/370™
- VisualAge for Java, Enterprise Edition for OS/390
- Enterprise COBOL for z/OS
- Enterprise COBOL for z/OS and OS/390
- COBOL for OS/390 & VM
- COBOL for MVS & VM (formerly COBOL/370)
- Enterprise PL/I for z/OS
- Enterprise PL/I for z/OS and OS/390
- VisualAge® PL/I
- PL/I for MVS & VM (formerly PL/I MVS™ & VM)
- VS FORTRAN and FORTRAN IV (in compatibility mode)

Although not all compilers listed are currently supported, Language Environment® supports the compiled objects that they created.

Language Environment supports, but is not required for, an interactive debug tool for debugging applications in your native z/OS environment.

Debug Tool is also available as a standalone product. Debug Tool Utilities and Advanced Functions is also available. For more information about Debug Tool, see
.

Language Environment supports, but is not required for, VS FORTRAN Version 2 compiled code (z/OS only).

Language Environment consists of the common execution library (CEL) and the runtime libraries for C/C++, COBOL, Fortran, and PL/I.

For more information about VisualAge for Java, Enterprise Edition for OS/390, program number 5655-JAV, see the product documentation.

Using your documentation

The publications provided with Language Environment are designed to help you:

© Copyright IBM Corp. 1991, 2015

- Manage the runtime environment for applications generated with a Language Environment-conforming compiler.
- Write applications that use the Language Environment callable services.
- Develop interlanguage communication applications.
- Customize Language Environment.
- Debug problems in applications that run with Language Environment.
- Migrate your high-level language applications to Language Environment.

Language programming information is provided in the supported high-level language programming manuals, which provide language definition, library function syntax and semantics, and programming guidance information.

Each publication helps you perform different tasks, some of which are listed in Table 1.

Table 1. How to use z/OS Language Environment publications

To ...	**Use ...**
Evaluate Language Environment	*z/OS Language Environment Concepts Guide*
Plan for Language Environment	*z/OS Language Environment Concepts Guide* *z/OS Language Environment Runtime Application Migration Guide*
Install Language Environment	*z/OS Program Directory* at the z/OS installation related information website
Customize Language Environment	*z/OS Language Environment Customization*
Understand Language Environment program models and concepts	*z/OS Language Environment Concepts Guide* *z/OS Language Environment Programming Guide* *z/OS Language Environment Programming Guide for 64-bit Virtual Addressing Mode*
Find syntax for Language Environment runtime options and callable services	*z/OS Language Environment Programming Reference*
Develop applications that run with Language Environment	*z/OS Language Environment Programming Guide* and your language programming guide
Debug applications that run with Language Environment, diagnose problems with Language Environment	*z/OS Language Environment Debugging Guide*
Get details on runtime messages	*z/OS Language Environment Runtime Messages*
Develop interlanguage communication (ILC) applications	*z/OS Language Environment Writing Interlanguage Communication Applications* and your language programming guide
Migrate applications to Language Environment	*z/OS Language Environment Runtime Application Migration Guide* and the migration guide for each Language Environment-enabled language

How to read syntax diagrams

This section describes how to read syntax diagrams. It defines syntax diagram symbols, items that may be contained within the diagrams (keywords, variables, delimiters, operators, fragment references, operands) and provides syntax examples that contain these items.

Syntax diagrams pictorially display the order and parts (options and arguments) that comprise a command statement. They are read from left to right and from top to bottom, following the main path of the horizontal line.

For users accessing the IBM Knowledge Center using a screen reader, syntax diagrams are provided in dotted decimal format.

Symbols

The following symbols may be displayed in syntax diagrams:

Symbol
Definition

►►— Indicates the beginning of the syntax diagram.

—► Indicates that the syntax diagram is continued to the next line.

►— Indicates that the syntax is continued from the previous line.

—►◄ Indicates the end of the syntax diagram.

Syntax items

Syntax diagrams contain many different items. Syntax items include:

- Keywords - a command name or any other literal information.
- Variables - variables are italicized, appear in lowercase, and represent the name of values you can supply.
- Delimiters - delimiters indicate the start or end of keywords, variables, or operators. For example, a left parenthesis is a delimiter.
- Operators - operators include add (+), subtract (-), multiply (*), divide (/), equal (=), and other mathematical operations that may need to be performed.
- Fragment references - a part of a syntax diagram, separated from the diagram to show greater detail.
- Separators - a separator separates keywords, variables or operators. For example, a comma (,) is a separator.

Note: If a syntax diagram shows a character that is not alphanumeric (for example, parentheses, periods, commas, equal signs, a blank space), enter the character as part of the syntax.

Keywords, variables, and operators may be displayed as required, optional, or default. Fragments, separators, and delimiters may be displayed as required or optional.

Item type
Definition

Required
Required items are displayed on the main path of the horizontal line.

Optional
Optional items are displayed below the main path of the horizontal line.

Default
Default items are displayed above the main path of the horizontal line.

Syntax examples

The following table provides syntax examples.

Table 2. Syntax examples

Item	Syntax example
Required item. Required items appear on the main path of the horizontal line. You must specify these items.	
Required choice. A required choice (two or more items) appears in a vertical stack on the main path of the horizontal line. You must choose one of the items in the stack.	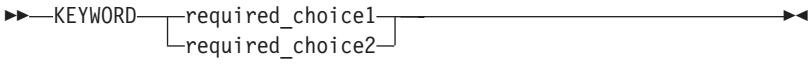
Optional item. Optional items appear below the main path of the horizontal line.	
Optional choice. An optional choice (two or more items) appears in a vertical stack below the main path of the horizontal line. You may choose one of the items in the stack.	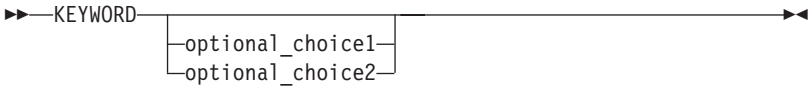
Default. Default items appear above the main path of the horizontal line. The remaining items (required or optional) appear on (required) or below (optional) the main path of the horizontal line. The following example displays a default with optional items.	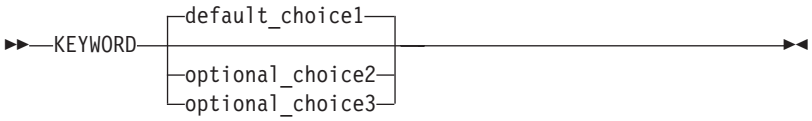
Variable. Variables appear in lowercase italics. They represent names or values.	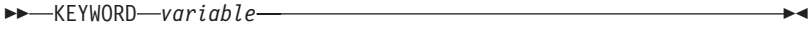

Table 2. Syntax examples (continued)

Item	Syntax example
Repeatable item. An arrow returning to the left above the main path of the horizontal line indicates an item that can be repeated. A character within the arrow means you must separate repeated items with that character. An arrow returning to the left above a group of repeatable items indicates that one of the items can be selected, or a single item can be repeated.	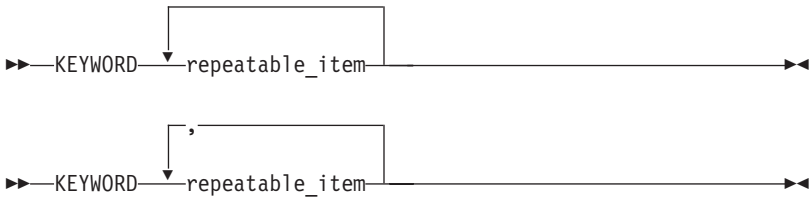
Fragment. The fragment symbol indicates that a labelled group is described below the main syntax diagram. Syntax is occasionally broken into fragments if the inclusion of the fragment would overly complicate the main syntax diagram.	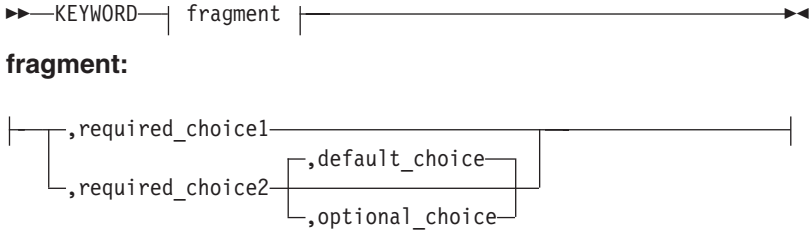

This Programming Guide

To use this book you should be familiar with the Language Environment product and one or more of the supported Language Environment-conforming high-level languages listed above. The term C/C++ is used generically to refer to information that applies to both C and C++.

Previous versions of the Language Environment-conforming language products provided their own environment and services for running applications, and their associated application programming guides including information on how to link-edit and run applications. Language Environment now provides the runtime support required to run applications compiled under all of the Language Environment-conforming HLLs, as well as the facility for interlanguage communication between supported languages.

For application programming, you will need to use this book and *z/OS Language Environment Programming Reference*. This book contains information about linking, running, and using services within the Language Environment environment, the Language Environment program management model, and language- and operating system-specific information, where applicable. *z/OS Language Environment Programming Reference* contains more detailed information, as well as specific syntax for using runtime options and callable services. *z/OS Language Environment Writing Interlanguage Communication Applications* provides information to help you create and run interlanguage communication (ILC) applications.

This book is organized as follows:

- Part 1 includes a basic introduction to Language Environment. It also describes linking, loading, and running under each of the supported operating systems, as

well as using IBM-supplied cataloged procedures, Language Environment runtime options, and Language Environment callable services.

- Part 2 describes how to prepare an application to run in Language Environment.
- Part 3 describes Language Environment concepts, services, and models, including initialization and termination, program management model, storage, condition handling, messages, callable services, and math services.
- Part 4 explains using interfaces to other products such as CICS, DB2®, and IMS™.
- Part 5 addresses specialized programming tasks, such as using runtime user exits, assembler considerations, preinitialization services, and using nested enclaves.
- The various appendixes describe interfaces to subsystems, writing callable services, using parameter list formats, prelinking, using the C object library, systems programming environments, sort and merge considerations, ISPF, and Language Environment macros.

How to send your comments to IBM

We appreciate your input on this publication. Feel free to comment on the clarity, accuracy, and completeness of the information or provide any other feedback that you have.

Use one of the following methods to send your comments:

1. Send an email to mhvrcfs@us.ibm.com.
2. Send an email from the "Contact us" web page for z/OS (http://www.ibm.com/systems/z/os/zos/webqs.html).
3. Mail the comments to the following address:
   IBM Corporation
   Attention: MHVRCFS Reader Comments
   Department H6MA, Building 707
   2455 South Road
   Poughkeepsie, NY 12601-5400
   US
4. Fax the comments to us, as follows:
   From the United States and Canada: 1+845+432-9405
   From all other countries: Your international access code +1+845+432-9405

Include the following information:

- Your name and address.
- Your email address.
- Your telephone or fax number.
- The publication title and order number:
  z/OS V2R1.0 Language Environment Programming Guide
  SA38-0682-01
- The topic and page number that is related to your comment.
- The text of your comment.

When you send comments to IBM, you grant IBM a nonexclusive right to use or distribute the comments in any way appropriate without incurring any obligation to you.

IBM or any other organizations use the personal information that you supply to contact you only about the issues that you submit.

If you have a technical problem

Do not use the feedback methods that are listed for sending comments. Instead, take one of the following actions:

- Contact your IBM service representative.
- Call IBM technical support.
- Visit the IBM Support Portal at z/OS support page (http://www.ibm.com/systems/z/support/).

© Copyright IBM Corp. 1991, 2015

Summary of changes

This information includes terminology, maintenance, and editorial changes. Technical changes or additions to the text and illustrations for the current edition are indicated by a vertical line to the left of the change.

Summary of changes for z/OS Version 2 Release 1 (V2R1) as updated February, 2015

The following changes are made for z/OS Version 2 Release 1 (V2R1) as updated February, 2015.

New

- In support of vector registers, two fields (VRSMASK and VRSLOCR) were added to the CEEPPA macro. See "CEEPPA macro — Generate a PPA" on page 454.

z/OS Version 2 Release 1 summary of changes

See the following publications for all enhancements to z/OS Version 2 Release 1 (V2R1):

- *z/OS Migration*
- *z/OS Planning for Installation*
- *z/OS Summary of Message and Interface Changes*
- *z/OS Introduction and Release Guide*

© Copyright IBM Corp. 1991, 2015

Part 1. Creating applications with Language Environment

This topic explains the steps for creating and running an executable program, and provides an overview of runtime options.

Note: The terms having to do with linking (*bind*, *binding*, *link*, *link-edit*, and so on) refer to the process of creating an executable program from object modules (the output that is produced by compilers and assemblers). The program used is the DFSMS program management binder. The binder extends the services of the linkage editor and is the default program provided for creating an executable. For information that is specific to the linkage editor, see *z/OS MVS Program Management: User's Guide and Reference* and *z/OS MVS Program Management: Advanced Facilities*.

If you have an application that contains interlanguage calls, you might need to relink-edit it to take advantage of the Language Environment ILC support. See *z/OS Language Environment Runtime Application Migration Guide* for more information.

© Copyright IBM Corp. 1991, 2015

Chapter 1. Introduction to Language Environment

Language Environment provides a common runtime environment for IBM versions of certain high-level languages (HLLs), namely, C, C++, COBOL, Fortran, and PL/I, in which you can run existing applications written in previous versions of these languages as well as in the current versions. Before Language Environment, each of the HLLs had to provide a separate runtime environment.

Language Environment combines essential and commonly used runtime services, such as routines for runtime message handling, condition handling, storage management, date and time services, and math functions, and makes them available through a set of interfaces that are consistent across programming languages. With Language Environment, you can use one runtime environment for your applications, regardless of the application's programming language or system resource needs because most system dependencies have been removed.

Language Environment provides compatible support for existing HLL applications; most existing single-language applications can run under Language Environment without being recompiled or relink-edited. POSIX-conforming C applications can use all Language Environment services.

Components of Language Environment

As Figure 1 on page 4 shows, Language Environment consists of the following components:

- Basic routines that support starting and stopping programs, allocating storage, communicating with programs written in different languages, and indicating and handling error conditions.
- Common library services, such as math services and date and time services, that are commonly needed by programs running on the system. These functions are supported through a library of callable services.
- Language-specific portions of the common runtime library.

© Copyright IBM Corp. 1991, 2015

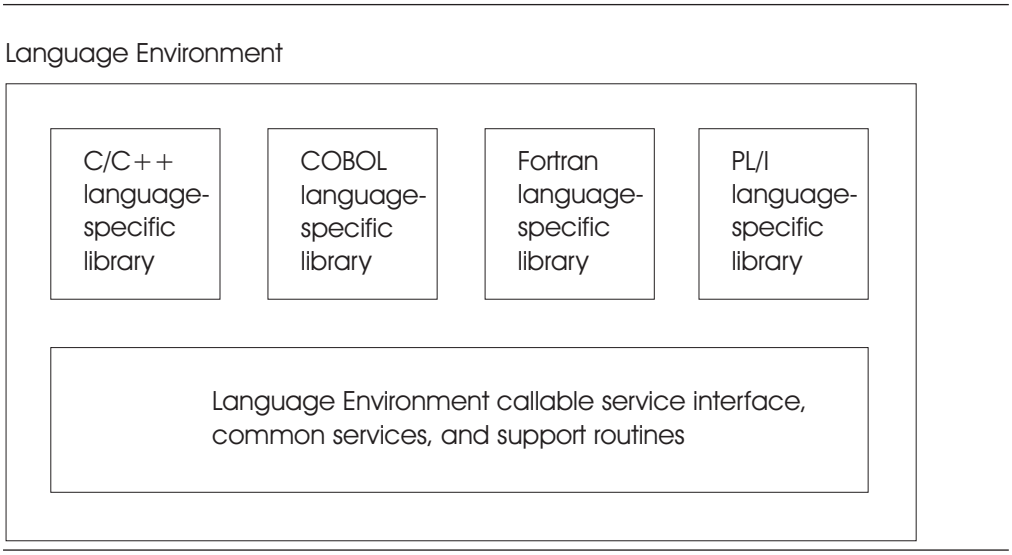

Figure 1. Components of Language Environment

The following IBM language compilers currently participate in this release:
- z/OS XL C/C++
- C/C++ Compiler for MVS/ESA
- AD/Cycle C/370 Compiler
- VisualAge for Java, Enterprise Edition for OS/390
- Enterprise COBOL for z/OS
- COBOL for OS/390 & VM
- COBOL for MVS & VM (formerly COBOL/370)
- Enterprise PL/I for z/OS
- PL/I for MVS & VM (formerly PL/I MVS & VM)
- VS FORTRAN and FORTRAN IV (in compatibility mode)

See *z/OS Language Environment Runtime Application Migration Guide* and *z/OS Planning for Installation* for a list of pre-Language Environment IBM language products.

Common runtime environment of Language Environment

The common runtime environment of Language Environment illustrates the common environment that Language Environment creates.

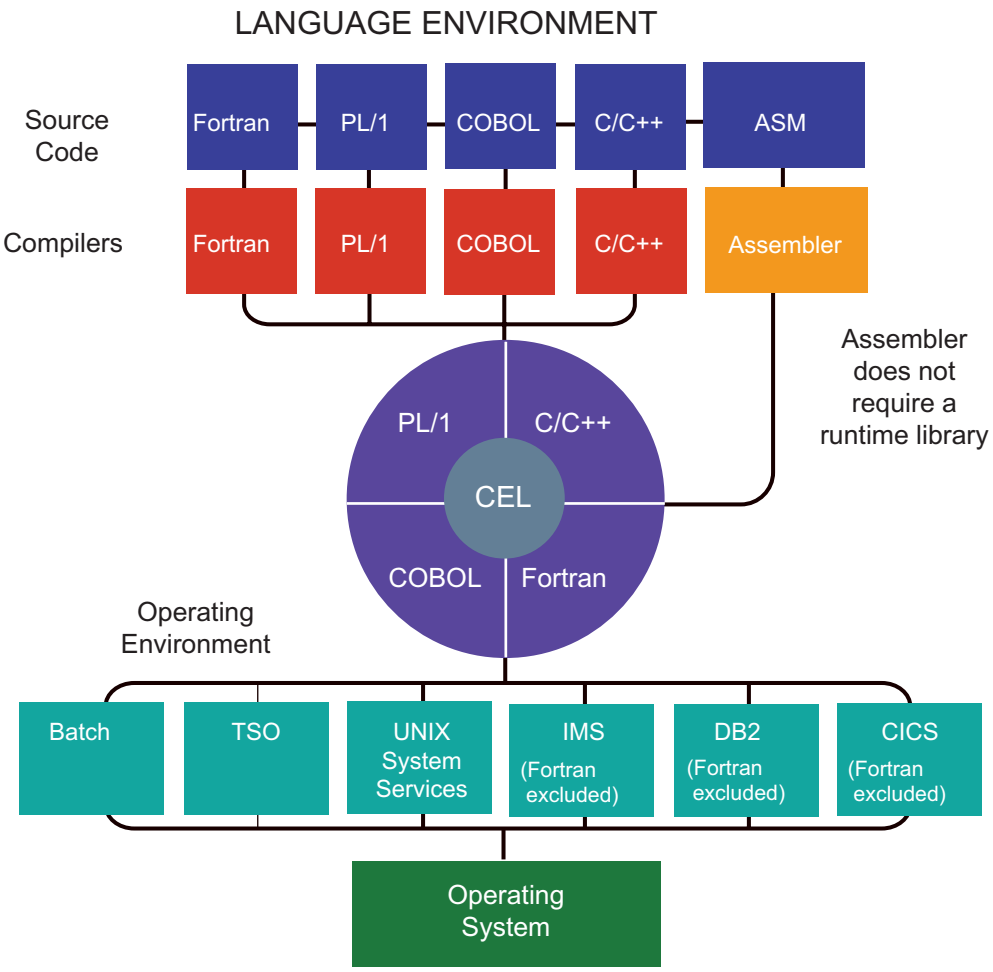

Figure 2. The common runtime environment of Language Environment

Chapter 2. Preparing to link-edit and run under Language Environment

This topic discusses what you need to know before link-editing and running applications under Language Environment. After Language Environment is installed on your system, you should run an existing application under Language Environment. Although you may need to link-edit to different libraries, the procedure is similar to that used in pre-Language Environment versions of C, COBOL, Fortran, or PL/I. For more information about running applications under Language Environment that have not been linked with Language Environment, see the for more information.

To help you get started, this topic describes the following common link-edit and run tasks, which you might want to try before reading further:

- Link-editing and running an existing object module and accepting the default Language Environment runtime options
- Link-editing and running an existing object module and specifying new Language Environment runtime options
- Calling a Language Environment service

Note that several Fortran and C library routines have identical names. This topic describes what you must do to resolve any potential conflicts in using these names.

This topic also describes basic tasks intended to help give you an idea of what running an application under Language Environment is like. It is not intended to illustrate every aspect of link-editing and running you might want to learn. Detailed instructions about link-editing and running existing and new applications under each supported operating system are provided in other topics in this information, and in *z/OS MVS Program Management: User's Guide and Reference* and *z/OS MVS Program Management: Advanced Facilities*.

Understanding Language Environment library routines

Language Environment library routines are divided into two categories: *resident routines* and *dynamic routines*. The resident routines are linked with the application and include such things as initialization/termination routines and pointers to callable services. The dynamic routines are not part of the application and are dynamically loaded during run time.

The way Language Environment code is packaged keeps the size of application executable programs small. When maintaining dynamic library code, you need not relink-edit the application code except under special circumstances, such as when you use an earlier version of code.

The linkage editor converts an object module into an executable program and stores it in a library. The executable program can then be run from that library at any time. The link-edit process combines output from compilers, language translators, link-edit programs and control statements to produce an executable program (load module or program object) and stores it in a library (PDS, PDSE, or HFS). The executable program can then be run from that library. Either the program management binder or linkage editor can be used to perform the link-edit process. All of the services of the linkage editor can be performed by the binder. In

© Copyright IBM Corp. 1991, 2015

addition, the binder provides additional functionality and usability improvements. See *z/OS MVS Program Management: User's Guide and Reference* and *z/OS MVS Program Management: Advanced Facilities* for a complete discussion of services to create, load, modify, list, read, transport and copy executable programs.

Planning to link-edit and run

There are certain considerations that you must be aware of before link-editing and running applications under Language Environment.

Language Environment resident routines for non-XPLINK applications, including those for callable services, initialization, and termination, are located in the SCEELKED and SCEELKEX libraries. Language Environment resident routines for XPLINK applications are located in the SCEEBIND and SCEEBND2 libraries. Language Environment dynamic routines are located in the SCEERUN and SCEERUN2 libraries. The Language Environment libraries are located in data sets identified with a high-level qualifier specific to the installation.

The following is a summary of the Language Environment libraries and their contents:

SCEERUN
A PDS which contains the runtime library routines needed during execution of applications written in C/C++, PL/I, COBOL and FORTRAN.

SCEERUN2
A PDSE which contains the runtime library routines needed during execution of applications written in C/C++ and COBOL.

SCEELKED
Contains Language Environment resident routines for non-XPLINK applications, including those for callable services, initialization, and termination. This includes language-specific callable services, such as those for the C/C++ runtime library. Only case-insensitive names of eight or less characters in length are contained in this library. *This library must be used only when link-editing a non-XPLINK program.*

SCEELKEX
Like SCEELKED, contains Language Environment resident routines for non-XPLINK applications. However, case-sensitive names which can be greater than eight characters in length are contained in this library. This allows symbols such as the C/C++ `printf` and `pthread_create` functions to be resolved without requiring the names to be uppercased, truncated, or mapped to another symbol. **This library must be used only when link-editing a non-XPLINK program.**

SCEEOBJ
Contains Language Environment resident definitions for non-XPLINK applications which may be required for z/OS UNIX System Services (z/OS UNIX) programs, such as the definition of the external variable symbol `environ`. **SCEEOBJ must be used whenever link-editing a z/OS UNIX non-XPLINK program.**

SCEECPP
Contains Language Environment resident definitions for non-XPLINK applications which may be required for C++ programs, such as the definition of the `new operator`. **SCEECPP must be used whenever link-editing a program which includes any NOXPLINK-compiled C++ object modules.**

SCEEBIND
Contains Language Environment resident routines for XPLINK applications, but is deprecated and may not be supported in a future release. Use SCEEBND2 instead.

SCEEBND2
Contains all Language Environment resident routines for XPLINK applications. This one library replaces the four libraries of resident routines for non-XPLINK applications. For XPLINK, this one library is used wherever the four libraries of resident routines (SCEELKED, SCEELKEX, SCEEOBJ, SCEECPP) had been used. It provides only a small number of resident routines, since most of the functions formerly provided in those static libraries are instead provided using dynamic linkage. **SCEEBND2 must be used only when link-editing an XPLINK program.**

SCEELIB
Contains side-decks for DLLs provided by Language Environment.

Many of the language-specific callable services available to XPLINK-compiled applications appear externally as DLL functions. See Chapter 4, "Building and using dynamic link libraries (DLLs)," on page 43 for information about DLLs. To resolve these references from XPLINK applications, a definition side-deck must be included when link-editing the application. The SCEELIB library contains the following side-decks in support of XPLINK :

- CELHS001 — Side-deck to resolve references to Language Environment services when link-editing an XPLINK application. This includes both Application Writer Interfaces (AWIs, see *z/OS Language Environment Programming Reference*) and Compiler Writer Interfaces (CWIs, see *z/OS Language Environment Vendor Interfaces*). The entries in this side-deck replace the corresponding non-XPLINK resident routines in SCEELKED.

  The AWI stubs also exist as executables in SCEERUN, which can be loaded and run from non-XPLINK applications. This technique cannot be used with XPLINK applications.
- CELHS003 — Side-deck to resolve references to callable services in the C/C++ runtime library when link-editing an XPLINK application. The entries in this side-deck replace the corresponding non-XPLINK resident routines in SCEELKEX, SCEELKED and SCEEOBJ.
- CELHSCPP — Side-deck to resolve references to C++ runtime library (RTL) definitions that may be required when link-editing an XPLINK application. The entries in this side-deck replace the non-XPLINK resident routines in SCEECPP.

The functions in these side-decks can be called from an XPLINK application. However, they cannot be used as the target of an explicit `dllqueryfn()` against the DLL.

Link-editing single-language applications

The default main entry point for a C, C++, or PL/I application is CEESTART (PLISTART for code compiled with OS PL/I); for a Fortran application, it is the name of the main routine. For COBOL, the main entry point for an application is determined in one of two ways:

- The name of the first object module presented to the link-edit process.
- Explicit specification of the entry point by providing a control statement to the link-edit process.

A copy of CEESTART resides in the Language Environment SCEELKED library. Do not explicitly include it in the link-edit process, even for Language Environment-conforming languages. The compilers generate CEESTART or references to it when necessary.

Although CEESTART is not used as an entry point by Language Environment-conforming assembler programs, it still must be resolved by the link-editor. To ensure this is possible, avoid using the NCAL link-editor option.

You must link-edit applications before you run them.

Link-editing ILC applications

When mixing languages within an application, presenting the desired main routine to the link-edit process first nominates it as the entry point. You can specify only one main routine.

To get Language Environment's support in using pre-Language Environment C – COBOL ILC applications, you must relink-edit these applications to replace old HLL library routines with Language Environment routines. Relink-editing ILC applications of any language combination is usually required, with the following exceptions:

- Any PL/I – COBOL ILC applications relink-edited using the migration aid provided by OS PL/I Version 2 Release 3. (See the IBM Enterprise PL/I for z/OS library (http://www.ibm.com/support/docview.wss?uid=swg27036735) for details.) The PTF numbers for the migration aid are UN76954 and UN76955.
- Any PL/I – C ILC applications.
- Any COBOL – C ILC applications relink-edited using the migration aid provided by the C/370 Version 2 Library. This migration aid was delivered in the fix for APAR PN74931.

For more information, see *z/OS Language Environment Writing Interlanguage Communication Applications*, *z/OS Language Environment Runtime Application Migration Guide*, and the migration guides for your primary HLL.

Downward compatibility considerations

As of OS/390 Version 2 Release 10, Language Environment provides downward compatibility support. Assuming that required programming guidelines and restrictions are observed, this support enables programmers to develop applications on higher release levels of the operating system, for deployment on execution platforms that are running lower release levels of the operating system. For example, you may use OS/390 V2R10 or later (and Language Environment) on a development system where applications are coded, link edited, and tested, while using any supported lower release of OS/390 (and Language Environment) on their production systems where the finished application modules are deployed.

Downward compatibility support is not the roll-back of new function to prior releases of the operating system. Applications developed exploiting the downward compatibility support must not use Language Environment function that is unavailable on the lower release of the operating system where the application will be deployed. The downward compatibility support includes toleration PTFs for lower releases of the operating system (specific PTF numbers can be found in the PSP buckets), to assist in diagnosis of applications that violate the programming requirements for this support.

The downward compatibility support provided by OS/390 V2R10 and later, and by the toleration PTFs, does not change Language Environment's upward compatibility. That is, applications coded and link-edited with one release of Language Environment will continue to execute on later releases of Language Environment, without a need to recompile or relink-edit the application, independent of the downward compatibility support.

The application requirements and programming guidelines for downward compatibility are:

- The application must only use Language Environment function that is available on the release level of the operating system used on the target deployment system.
- The application must only use Language Environment function that is available on the release level of the operating system used for developing and link-editing the application, by using the appropriate Language Environment object libraries, header files, and macros.
- The release level of the operating system used for application development and link-editing must be at least the level that is the prerequisite of the compiler product(s) (C/C++, COBOL, Fortran, PL/I) that are used to develop the application.
- The release level of the operating system used on the target deployment system must be at least the level that is the prerequisite of the compiler products that are used to develop the application.
- The release level of the operating system used for application development and link-editing must be at least OS/390 V2R10.
- The program object format of the application must be no greater than the highest level supported on the target deployment system.

The term "Language Environment function" used in the discussion of downward compatibility support refers to:

- Language Environment callable services (see *z/OS Language Environment Programming Reference*).
- Language Environment runtime options
- C/C++ library functions
- UNIX branding functions
- Other new language functionality that has an explicit operating system release prerequisite that is documented in the user publications. For example, with OS/390 V2R9 Language Environment, new support was added so that COBOL programs could dynamically call a reentrant C routine with constructed reentrancy without using `#pragma(xxx,COBOL).` This support is available on OS/390 V2R9 Language Environment or later, but is not available on prior releases.

The compiler products that support development of downward compatible applications are listed in the table below, along with their prerequisite minimum release level of the operating system. (Prior releases of the compilers beyond those listed in the table are still supported by Language Environment, but do not provide downward compatibility. They only support *upward* compatibility.)

Table 3. Prerequisite OS/390 release level for the various compilers that support downward compatibility

Compiler product	OS/390 release level prerequisite
Enterprise COBOL for z/OS	OS/390 V2R10

Table 3. Prerequisite OS/390 release level for the various compilers that support downward compatibility (continued)

Compiler product	OS/390 release level prerequisite
COBOL for MVS & VM, V1R2	OS/390 V2R6
COBOL for OS/390 & VM, V2R1	OS/390 V2R6
COBOL for OS/390 & VM, V2R2	OS/390 V2R6
PL/I for MVS & VM	OS/390 V2R6
OS PL/I 2.3	OS/390 V2R6
OS/390 C/C++ compiler	OS/390 V2R10
VS Fortran 2.6	OS/390 V2R6

The diagnosis assistance that will be provided by the toleration PTFs includes:

- **Options Processing:** Whenever an application exploits Language Environment runtime options that are unavailable on the release of the operating system the application is executed on, a message will be issued. In order to issue this message, toleration PTFs are available down to OS/390 V2R6, and you must apply them on the target system. The use of environment variables, even specific Language Environment ones, is not covered by this support.
- **Detection of unsupported function:** In many cases where a programmer disregards the requirements and programming guidelines and exploits a Language Environment function that is unavailable on the release of the operating system the application is executed on, Language Environment will raise a new condition. With an unhandled condition, the application is terminated. In order to raise this new condition, toleration PTFs are available down to OS/390 V2R6, and you must apply them on the target system.
- **C/C++ headers:** As of OS/390 V2R10, support has been added to the C/C++ headers shipped with Language Environment to allow application developers to "target" a specific release, in order to ensure the application hasn't taken advantage of any new C/C++ library function. See *z/OS XL C/C++ User's Guide* for details of how the TARGET compiler option can be used to create downward-compatible applications and prevent application developers from using new C/C++ library functions in applications.
- **Detection of unsupported program object format:** If the program object format is at a level which is not supported by the target deployment system, then the deployment system will produce an abend when trying to load the application program. The abend will indicate that DFSMS/MVS was unable to find or load the application program. Correcting this problem does not require the installation of any toleration PTFs. Rather the application developer will need to recreate the program object which is compatible with older deployment system. For information on using the Program Management binder COMPAT option, see *z/OS MVS Program Management: User's Guide and Reference*.

  Note: Starting with z/OS V1R8, the c89 utility is no longer by default passing COMPAT = CURRENT option to the program management binder. Program objects created by the c89 utility and native program management binder invocations will use the default COMPAT = MIN.

Checking which runtime options are in effect

Using the Language Environment runtime option RPTOPTS, you can control whether a runtime options report is produced; with the Language Environment runtime option MSGFILE, you can control where report output is directed. RPTOPTS generates a report of all the runtime options that are in effect when your application begins to run. The IBM-supplied default for RPTOPTS is OFF, meaning a report is not generated when your application finishes running. If you override the default setting of RPTOPTS in any of the ways described below, a report is sent to the default location:

- On MVS, to the standard system data set SYSOUT. SYSOUT is dynamically allocated when needed, and is directed to whatever MSGCLASS you specified on the JOB card when you ran the application.
- Under z/OS UNIX, it goes to file descriptor 2.
- On TSO/E, to SYSOUT.

If you want to change the options report destination, you can alter the default setting of the MSGFILE runtime option, which specifies where all runtime diagnostics and messages are written. For example, if you specify MSGFILE(OPTRPRT), the storage report is written to a file whose *ddname* is OPTRPRT. You need to allocate a data set for OPTRPRT under batch and TSO/E.

For the syntax of RPTOPTS and MSGFILE, see *z/OS Language Environment Programming Reference*.

HLL compatibility considerations

Some applications link-edited with previous levels of HLL runtime libraries might have to be relink-edited with Language Environment. Language Environment provides sample JCL and EXECs to help you replace pre-Language Environment library routines in your applications with equivalent Language Environment routines. For example:

- The COBOL library routine replacement tools IGZWRLKA, IGZWRLKB and IGZWRLKC, located in SCEESAMP, can be used to replace OS/VS COBOL and VS COBOL II library routines in a COBOL executable module with the equivalent Language Environment routines.
  - IGZWRLKA – relink a VS COBOL II program.
  - IGZWRLKB – relink a OS/VS COBOL program.
  - IGZWRLKC – relink a program that contains both VS COBOL II and OS/VS COBOL.

  See “COBOL considerations” on page 14 for details.
- The PL/I library routine replacement tools IBMWRLK and IBMWRLKC, located in SCEESAMP, can be used to replace OS PL/I library routines in an OS PL/I executable program with the equivalent Language Environment routines. See “PL/I considerations” on page 24 for details.
- The Fortran library module replacement tool, AFHWRLK, also located in SCEESAMP, can be used to replace VS FORTRAN Version 1 and VS FORTRAN Version 2 runtime library modules with the equivalent Language Environment modules. See “Fortran considerations” on page 15 for details.

For information on compatibility considerations for a pre-Language Environment library routine, consult the migration guide for the HLL of the routine.

C/C++ AMODE/RMODE considerations

The following table shows valid AMODE and RMODE combinations when the C/C++ runtime product is installed with the runtime library, EDCZV, having RMODE=ANY. These settings are the installation defaults. XPLINK executable programs always run with AMODE=31.

Product	RMODE	AMODE	Note
C/C++ with CICS/ESA	ANY	31	All programs must use this AMODE and RMODE combination.
C/C++ with COBOL	24 or ANY	31	For VS COBOL II, all COBOL programs must be compiled with the RES compiler option, which causes AMODE=31. For COBOL for OS/390 & VM, COBOL for MVS & VM and COBOL/370, AMODE=31 always.
C/C++ with DB2 R2.2	24 or ANY	31	All programs must use this AMODE and RMODE combination.
C/C++ with IMS/ESA® V3R1	24 or ANY	31	All programs must use the same AMODE and RMODE combination. There are no restrictions on IMS/ESA parameters.
One of the following: • C/C++ only • C/C++ with ISPF • C/C++ with PL/I	24 or ANY	31	All programs must use the same AMODE and RMODE combination.

For information on AMODE switching, see *z/OS XL C/C++ Runtime Library Reference*.

COBOL considerations

This topic describes what you need to know if you link-edit or relink-edit a COBOL program with Language Environment.

Replacing COBOL library routines in a COBOL load module

Three sample jobs are provided in the SCEESAMP sample library that can be used to replace all OS/VS COBOL and VS COBOL II library routines in load modules containing OS/VS COBOL and VS COBOL II programs. These sample jobs are:

- IGZWRLKA to relink-edit a VS COBOL II load module with Language Environment
- IGZWRLKB to relink-edit an OS/VS COBOL load module with Language Environment
- IGZWRLKC to relink-edit a load module that contains both OS/VS COBOL programs and VS COBOL II programs with Language Environment

For more information on relink-editing existing OS/VS COBOL and VS COBOL II load modules, see the Enterprise COBOL for z/OS library (http://www-01.ibm.com/support/docview.wss?uid=swg27036733).

Using Language Environment resident routines for callable services

For COBOL CALL literal statements, the compiler allows you to specify whether your program uses *static* or *dynamic* calls to Language Environment callable services (or other subroutines):

- When a COBOL program makes a static call to a Language Environment callable service, the Language Environment resident routine (a callable service stub) is link-edited with the program.
- When a COBOL program makes a dynamic call to a Language Environment callable service, the Language Environment resident routine is not link-edited with the program.

Only COBOL programs compiled with Enterprise COBOL for z/OS, COBOL for OS/390 & VM, COBOL for MVS & VM or COBOL/370 can call Language Environment callable services.

Note: You can use dynamic calls from VS COBOL II programs to Language Environment Date/Time callable services. You cannot use dynamic call from VS COBOL II programs to other Language Environment callable services. You cannot use static calls from VS COBOL II programs to any Language Environment callable services.

For more information about COBOL static and dynamic calls, see the appropriate version of the COBOL programming guide in the COBOL library at Enterprise COBOL for z/OS library (http://www-01.ibm.com/support/docview.wss?uid=swg27036733).

For more information on Language Environment callable services, which can be used by COBOL, see *z/OS Language Environment Programming Reference*.

Fortran considerations

This topic discusses what you need to know if you link-edit or relink-edit a Fortran program.

Replacing Fortran runtime library modules in a Fortran executable program

To relink-edit your existing executable program under Language Environment, you must replace Fortran runtime library modules in the executable program with the equivalent Language Environment routines. The Fortran library module replacement tool enables you to do this without having to have the object modules that make up the executable program. This is most useful when:

- You need to recompile some, but not all, of your own Fortran routines that are within one of your executable programs.
- You need to upgrade existing programs to contain the Language Environment runtime library modules. Language Environment data sets can be installed, but the changes are not reflected in your own executable programs unless you link-edit them again using the updated data sets.

You might have to use your original executable program rather than your object modules as linkage editor input because you don't have all of your routines available in source form for recompilation or because you didn't retain the object modules. A problem occurs when you use your previous executable programs as

linkage editor input because the linkage editor retains the non-Language Environment modules that are in your original executable program while including others from the current SYSLIB input. The solution is to use the Fortran library module replacement tool as discussed in the following sections.

Using the Fortran library module replacement tool

The Fortran library module replacement tool provides a set of linkage editor REPLACE statements to help you replace all of the runtime library modules when your input to the linkage editor is an existing executable program containing the library modules. The tool supports executable programs created by VS FORTRAN Version 1, VS FORTRAN Version 2, and Language Environment. The source file containing the Fortran library module replacement tool is member AFHWRLK in the CEE.SCEESAMP library.

In Figure 3, the VS FORTRAN Version 2 runtime library modules in the executable program MYLMOD are replaced while retaining the compiled code, using the cataloged procedure CEEWL.

```
//RELINK     EXEC PROC=CEEWL,PGMLIB=MYPDS.LOAD,GOPGM=MYLMOD
//SYSPRINT   DD   SYSOUT=A
//SAMPLIB    DD   DSN=CEE.SCEESAMP,DISP=SHR
//USERLMOD   DD   DSN=MYPDS.LOAD,DISP=OLD
//LKED.SYSIN DD    *
  INCLUDE SAMPLIB(AFHWRLK)
  INCLUDE USERLMOD(MYLMOD)
  NAME    MYLMOD(R)
/*
```

Figure 3. Replacing VS FORTRAN run-time library modules under batch, using CEEWL

Figure 4 shows how you can perform the same replacement under TSO/E, using a CLIST.

```
PROC 0
CONTROL MSG NOFLUSH NOPROMPT SYMLIST CONLIST
LINK ('CEE.SCEESAMP(AFHWRLK)',        +
      'MYPDS.LOAD(MYLMOD)')           +
LOAD ('MYPDS.LOAD(MYLMOD)')           +
LIB  ('CEE.SCEELKED') NOTERM
```

Figure 4. Replacing VS FORTRAN run-time library modules under TSO/E, using a CLIST

Resolving static common block name conflicts

It is possible for a Fortran static common block name in one program unit to be in conflict with a Fortran intrinsic function name in another program unit. (A conflict could arise, for example, if you used LOG as a common block name and invoked the LOG intrinsic function in a different program unit.) To avoid any such conflict, either rename the common block or recompile with VS FORTRAN Version 2.5 or later.

It is also possible that a Fortran static common block name could conflict with another language's library routine name. (A conflict could arise, for example, if you used GETS as a common block name, and also invoked C's `gets` function.) If you find such a conflict, either:

- Change the common block to be dynamic (using the DC compiler option), or
- Change the name of the common block so it does not conflict with the other language's library routine name.

Resolving library module name conflicts between Fortran and C

Several Fortran and C library routines, shown in Table 4, have identical names. To correctly run applications that reference one or more of these names, you need to determine if a name conflict exists, and if so, to resolve it according to the prescription given in this section. Otherwise, a library routine other than the one you intend is likely to be linked into your executable program, and the results during execution will not be what you expect.

Before you proceed with this topic, first resolve any static common block name conflicts as discussed in "Resolving static common block name conflicts" on page 16.

Table 4. Fortran and C library routine names that are identical

Routine names				
ABS	ACOS	ASIN	ATAN	ATAN2
CLOCK	COS	COSH	ERF	ERFC
EXIT	EXP	GAMMA	LOG	LOG10
SIN	SINH	SQRT	TAN	TANH

Conditions under which your application does not have a name conflict

If all three of the following conditions are true, your application does not have the name conflict discussed here, and you can therefore skip this topic:

- The *Language Environment interface validation exit* is available. (The interface validation exit is a routine that, when used with the binder, automatically resolves conflicting library routine references within Fortran routines)
  - Under batch, this means any link-edit steps (for example, in cataloged procedures) have been changed to include EXITS(INTFVAL(CEEPINTV)) in the PARM parameter and to include the following DD statement:

    ```
    //STEPLIB DD DSN=CEE.SCEELKED,DISP=SHR
    ```
  - Under TSO/E, this means you have included EXITS(INTFVAL(CEEPINTV)) among your link-edit options. Use the TSO/E command TSOLIB to dynamically allocate a STEPLIB.
- You are not relink-editing a pre-Language Environment executable program in which none of the component parts have been changed, but instead are link-editing one or more individual routines.
- None of the routines you are link-editing is an assembler CSECT that references a Fortran library routine from the list in Table 4.

Unless all three of the preceding conditions are true, you need to continue reading this section to be able to properly link-edit and run your application.

Determining if your application has a name conflict

Examine Table 5 on page 18. If your application contains a routine that is compiled (assembled) with one of the products shown in column one, and the routine uses one of the functions shown in column two, it has a name conflict that must be resolved.

Table 5. Conflicting names per product and release

Product used for compilation	Names causing conflict
VS FORTRAN Version 2 Release 5–6	CLOCK, EXIT
VS FORTRAN Version 2 Release 1–4, or VS FORTRAN Version 1	CLOCK, EXIT, or any name in Table 4 on page 17, if passed as an argument
FORTRAN IV H Extended, or FORTRAN IV G1, or Assembler, any version	Any name in Table 4 on page 17

To determine how to resolve any name conflicts, determine which of the following conditions (labeled **A** through **E**) are true.

A The Language Environment interface validation exit is available, as described in "Conditions under which your application does not have a name conflict" on page 17.

B You have a fully executable program created with one or more pre-Language Environment products, and you are not modifying any of its component parts.

C Condition **B** is not true, and your application contains at least one assembler CSECT that references a conflicting name listed in Table 4 on page 17. You want the CSECT's conflicting names resolved to Fortran routines.

D Condition **B** is not true, and your application consists *only* of one or more individual Fortran or assembler routines, of which at least one references a conflicting name. You want any conflicting names resolved to Fortran routines.

E Condition **B** is not true, and your application consists of one or more individual routines that are not just Fortran, assembler, or both. At least one Fortran or assembler routine references a conflicting name, and you want its conflicting names resolved to Fortran routines.

Next, find the row in Table 6 that corresponds to the combination of conditions that is true for your application (true conditions are denoted by X, and "don't-care" conditions by –).

Table 6. Decision table for name conflict resolution

A	B	C	D	E	Do the following:
X		X	–	–	Proceed to "Removing Fortran conflicting references."
–	X				Proceed to "Relink-editing a pre-Language Environment executable program" on page 22.
		–	X		Use one of the AFHW* cataloged procedures discussed in "IBM-supplied cataloged procedures" on page 105.
		–		X	Proceed to "Removing Fortran conflicting references."

Removing Fortran conflicting references

For each object or executable program that contains conflicting references that you want resolved to Fortran routines, you must replace the conflicting names with names that are unambiguous, as shown in the examples in this section. Under MVS, you will use the cataloged procedure AFHWN, or under TSO/E, a CLIST, in conjunction with data set SCEESAMP(AFHWNCH) to effect the name replacement.

(For information about cataloged procedure AFHWN, see "AFHWN — Resolving name conflicts between C and Fortran" on page 114.)

You can change one or several modules per step, as you wish. Use one of the following examples, adapting it to your application, as needed.

SCEESAMP(AFHWNCH) must be included immediately preceding each individual executable program whose names are to be changed, as shown in each example. AFHWNCH is a data set containing linkage-editor CHANGE statements to change all conflicting names in the module to which it is applied to names known unambiguously as Fortran routines. For example, `CHANGE ABS(A#BS)` replaces any reference to ABS, a conflicting name, with a reference to A#BS, the Fortran absolute value routine. A complete list of the conflicting names and their corresponding unambiguous Fortran names can be seen in Table 63 on page 440.

The modules resulting from this process have had all their conflicting names replaced. Having no name conflicts, they can, at any time, be linked as part of one or more executable programs in an application, for example:

- Under MVS, by using one of the CEEW* cataloged procedures discussed in "IBM-supplied cataloged procedures" on page 105
- Under TSO/E, by using the LINK command as discussed in "Link-editing your application using the LINK command" on page 84

When a module has had its conflicting references to CLOCK or EXIT changed, it is no longer usable with the VS FORTRAN Version 2 library.

Changing one module per step (MVS): Under MVS, the example in Figure 5 produces one executable program. Conflicting names in USER.INPUT.LOAD(MEM1) are replaced; USER.RESULT.LOAD(MEM1CHG) is the resulting executable program.

```
//CHGNAM     EXEC PROC=AFHWN,PGMLIB=USER.RESULT.LOAD,GONAME=MEM1CHG
//USERINP    DD   DSNAME=USER.INPUT.LOAD,DISP=SHR
//LKED.SYSIN DD   *
 INCLUDE SCEESAMP(AFHWNCH)
 INCLUDE USERINP(MEM1)
/*
```

Figure 5. Changing conflicting names in an executable program under MVS

The example in Figure 6 on page 20 produces several executable programs. Conflicting names in USER.INPUT.LOAD(MEM1, MEM2, and MEM3) are replaced; the resulting executable programs are USER.RESULT.LOAD(MEM1CHG, MEM2CHG, and MEM3CHG).

```
//CHGNAM1    EXEC PROC=AFHWN,PGMLIB=USER.RESULT.LOAD,GOPGM=MEM1CHG
//USERINP    DD   DSNAME=USER.INPUT.LOAD,DISP=SHR
//LKED.SYSIN DD   *
 INCLUDE SCEESAMP(AFHWNCH)
 INCLUDE USERINP(MEM1)
/*
//CHGNAM2    EXEC PROC=AFHWN,PGMLIB=USER.RESULT.LOAD,GOPGM=MEM2CHG
//USERINP    DD   DSNAME=USER.INPUT.LOAD,DISP=SHR
//LKED.SYSIN DD   *
 INCLUDE SCEESAMP(AFHWNCH)
 INCLUDE USERINP(MEM2)
/*
//CHGNAM3    EXEC PROC=AFHWN,PGMLIB=USER.RESULT.LOAD,GOPGM=MEM3CHG
//USERINP    DD   DSNAME=USER.INPUT.LOAD,DISP=SHR
//LKED.SYSIN DD   *
 INCLUDE SCEESAMP(AFHWNCH)
 INCLUDE USERINP(MEM3)
/*
```

Figure 6. Changing conflicting names in several executable programs under MVS

Changing one module per step (TSO/E): Under TSO/E, the example in Figure 7 produces a single executable program. Conflicting names in USER.INPUT.LOAD(MEM1) are replaced; the resulting executable program is USER.RESULT.LOAD(MEM1CHG).

```
PROC 0
CONTROL MSG NOFLUSH NOPROMPT SYMLIST CONLIST
LINK ('CEE.SCEESAMP(AFHWNCH)',        +
      'USER.INPUT.LOAD(MEM1)')        +
LOAD ('USER.RESULT.LOAD(MEM1CHG)')    +
LIB  ('CEE.SAFHFORT',                 +
      'CEE.SCEELKED') NOTERM LET NCAL
```

Figure 7. Changing conflicting names in an executable program under TSO/E

Figure 8 on page 21 shows an example that produces several executable programs. Conflicting names in USER.INPUT.LOAD(MEM1, MEM2, and MEM3) are replaced; the resulting executable programs are USER.RESULT.LOAD(MEM1CHG, MEM2CHG, and MEM3CHG).

```
PROC 0
CONTROL MSG NOFLUSH NOPROMPT SYMLIST CONLIST
LINK ('CEE.SCEESAMP(AFHWNCH)',        +
      'USER.INPUT.LOAD(MEM1)')        +
LOAD ('USER.RESULT.LOAD(MEM1CHG)')    +
LIB  ('CEE.SAFHFORT',                 +
      'CEE.SCEELKED') NOTERM LET NCAL

LINK ('CEE.SCEESAMP(AFHWNCH)',        +
      'USER.INPUT.LOAD(MEM2)')        +
LOAD ('USER.RESULT.LOAD(MEM2CHG)')    +
LIB  ('CEE.SAFHFORT',                 +
      'CEE.SCEELKED') NOTERM LET NCAL

LINK ('CEE.SCEESAMP(AFHWNCH)',        +
      'USER.INPUT.LOAD(MEM3)')        +
LOAD ('USER.RESULT.LOAD(MEM3CHG)')    +
LIB  ('CEE.SAFHFORT',                 +
      'CEE.SCEELKED') NOTERM LET NCAL
```

Figure 8. Changing conflicting names in several executable programs under TSO/E

Changing multiple modules per step (MVS): Figure 9 shows an example for MVS. Conflicting names in USER.INPUT.LOAD(MEM1, MEM2, and MEM3) are replaced; USER.RESULT.LOAD(MEM1CHG) is the resulting executable program. You must explicitly include AFHWNCH before each individual program.

```
//CHGNAM     EXEC PROC=AFHWN,PGMLIB=USER.RESULT.LOAD,GOPGM=MEM1CHG
//USERINP    DD   DSNAME=USER.INPUT.LOAD,DISP=SHR
//LKED.SYSIN DD   *
 INCLUDE SCEESAMP(AFHWNCH)
 INCLUDE USERINP(MEM1)
 INCLUDE SCEESAMP(AFHWNCH)
 INCLUDE USERINP(MEM2)
 INCLUDE SCEESAMP(AFHWNCH)
 INCLUDE USERINP(MEM3)
/*
```

Figure 9. Changing conflicting names in multiple executable programs under MVS

Changing multiple modules per step (TSO/E): Figure 10 on page 22 contains an example for TSO/E. Conflicting names in USER.INPUT.LOAD(MEM1, MEM2, and MEM3) are replaced; the resulting executable program is USER.RESULT.LOAD(MEM1CHG). You must explicitly link-edit AFHWNCH before each individual executable program.

```
PROC 0
CONTROL MSG NOFLUSH NOPROMPT SYMLIST CONLIST
LINK ('CEE.SCEESAMP(AFHWNCH)',        +
      'USER.INPUT.LOAD(MEM1)',        +
      'CEE.SCEESAMP(AFHWNCH)',        +
      'USER.INPUT.LOAD(MEM2)',        +
      'CEE.SCEESAMP(AFHWNCH)',        +
      'USER.INPUT.LOAD(MEM3)',        +
LOAD ('USER.RESULT.LOAD(MEM1CHG)')    +
LIB  ('CEE.SAFHFORT',                 +
      'CEE.SCEELKED') NOTERM LET NCAL
```

Figure 10. Changing conflicting names in multiple executable programs under TSO/E

Relink-editing a pre-Language Environment executable program

The action to take to relink-edit a pre-Language Environment executable program depends on whether it contains a reference to one or more of the conflicting names shown in Table 4 on page 17:

- If the executable program contains no reference to any of the conflicting names, but contains parts that reference Fortran routines *not* in the list of conflicting names, replace the Fortran routines with the equivalent Language Environment routines by using the module as input to the Fortran library module replacement tool, SCEESAMP(AFHWRLK), which is discussed in "Replacing Fortran runtime library modules in a Fortran executable program" on page 15.
- If the executable program does contain parts that reference one or more of the conflicting names, and the names are to be resolved to Fortran routines, the action you take depends on whether C parts are present in the executable program:
  - If the executable program does *not* contain any C part that references a conflicting name, replace the Fortran routines with the equivalent Language Environment routines by using the executable program as input to the Fortran library module replacement tool, SCEESAMP(AFHWRLK), and link-edit:
    - Under MVS, by using the AFHWL cataloged procedure (see "AFHWL — Link a program written in Fortran" on page 112), as shown in Figure 11.

```
//REPFORT    EXEC PROC=AFHWL,PGMLIB=USER.FORT.LOAD
//USERINP    DD   DSN=USER.FORT.LOAD,DISP=SHR
//LKED.SYSIN DD   *
 INCLUDE SCEESAMP(AFHWRLK)
 INCLUDE USERINP(MEM1)
 NAME MEM1(R)
/*
```

Figure 11. Replacing Fortran routines with Language Environment routines under MVS

      Fortran routines are replaced with the equivalent Language Environment routines using the Fortran library module replacement tool, AFHWRLK. The existing and resulting executable program is USER.FORT.LOAD(MEM1). No DD statement is needed for the SCEESAMP library because it is already included in the AFHWL cataloged procedure.
    - Under TSO/E, by using a CLIST as shown in Figure 12 on page 23, Fortran routines are replaced with the equivalent Language Environment routines

using the Fortran library module replacement tool, AFHWRLK. The existing and resulting executable program is USER.FORT.LOAD(MEM1).

```
PROC 0
CONTROL MSG NOFLUSH NOPROMPT SYMLIST CONLIST
LINK ('CEE.SCEESAMP(AFHWRLK)',        +
      'USER.FORT.LOAD(MEM1)')         +
LOAD ('USER.FORT.LOAD(MEM1)')         +
LIB  ('CEE.SAFHFORT',                 +
      'CEE.SCEELKED') NOTERM
```

Figure 12. Replacing Fortran routines with Language Environment routines under TSO/E

– If the executable program contains at least one C part that references a conflicting name, you can take one of two possible courses of action depending on whether the individual object modules of the executable program are available to you:
  - If the individual object modules are available, relink-edit the whole application following the name conflict procedure from the beginning to check for possible conflicts, or
  - If the individual object modules are not available, link-edit the executable program:
    • In MVS, using the CEEWL cataloged procedure, as shown in Figure 13 on page 24
    • In TSO/E, using a CLIST, as shown in Figure 14 on page 24

    Do the following in the link-edit step, as shown in the following examples:
    1. Include the SAFHFORT library Fortran routines to which the conflicting names should resolve.
    2. Include the Fortran library module replacement tool, SCEESAMP(AFHWRLK).
    3. Do the CSECT replacement necessary to make the C parts of the executable program compatible. There could be CSECTs that you need to replace in addition to those shown in Figure 13 on page 24 or Figure 14 on page 24; see *z/OS XL C/C++ Compiler and Runtime Migration Guide for the Application Programmer* for details.

The following example relink-edits an executable program containing both C and Fortran (or assembler) routines, where C references SQRT, and Fortran references SIN, LOG, and CLOCK. (The language of the main program here is C. If it were Fortran, the ENTRY CEESTART statement would be rewritten to instead name the Fortran main program.) The existing and resulting executable program is USER.FORTC.LOAD(MEM1).

```
//FORTC      EXEC PROC=CEEWL,PGMLIB=USER.FORTC.LOAD
//USERINP    DD DSNAME=USER.FORTC.LOAD,DISP=OLD
//SAFHFORT   DD DSNAME=CEE.SAFHFORT,DISP=SHR
//SCEESAMP   DD DSNAME=CEE.SCEESAMP,DISP=SHR
//LKED.SYSIN DD *
  INCLUDE SAFHFORT(SIN)
  INCLUDE SAFHFORT(LOG)
  INCLUDE SAFHFORT(CLOCK)
  INCLUDE SCEESAMP(AFHWRLK)
  INCLUDE USERINP(MEM1)
  NAME MEM1(R)
  INCLUDE SYSLIB(EDCSTART)
  INCLUDE SYSLIB(CEEROOTB)
  INCLUDE SYSLIB(@@FTOC)
  INCLUDE SYSLIB(@@CTOF)
  INCLUDE USERINP(MEM1)
  ENTRY CEESTART
  NAME MEM1(R)
/*
```

Figure 13. Relink-editing an executable program to resolve conflicting names under batch

The following example relink-edits an executable program containing both C and Fortran (or assembler) routines, where C references SQRT, and Fortran references SIN, LOG, and CLOCK. The existing and resulting executable program is USER.FORTC.LOAD(MEM1).

```
PROC 0
CONTROL MSG NOFLUSH NOPROMPT SYMLIST CONLIST
LINK ('CEE.SAFHFORT(SIN)',            +
      'CEE.SAFHFORT(LOG)',            +
      'CEE.SAFHFORT(CLOCK)',          +
      'CEE.SCEESAMP(AFHWRLK)',        +
      'USER.FORTC.LOAD(MEM1)')        +
LOAD ('USER.FORTC.LOAD(MEM1)')        +
LIB  ('CEE.SCEELKED') NOTERM
LINK ('CEE.SCEELKED(EDCSTART)',       +
      'CEE.SCEELKED(CEEROOTB)',       +
      'CEE.SCEELKED(@@FTOC)',         +
      'CEE.SCEELKED(@@CTOF)',         +
      'USER.FORTC.LOAD(MEM1)')        +
LOAD ('USER.FORTC.LOAD(MEM1)')        +
LIB  ('CEE.SCEELKED') NOTERM
```

Figure 14. Relink-editing an executable program to resolve conflicting names under TSO/E

PL/I considerations

This section discusses what you need to know if you link-edit or relink-edit in PL/I.

Link-editing PL/I subroutines for later use

To prelink PL/I subroutines, store them in a load library, and later INCLUDE them with main procedures. The subroutines must be linked with the NCAL link-edit option which causes unresolved external reference error messages from the link-edit process, but these are resolved when the PL/I main procedure is linked with the subroutines. The NCAL option is needed because, in a PL/I load module,

all the resident modules must be at the same level. This consistency is ensured because external references are not resolved until the final link.

Replacing PL/I library routines in an OS PL/I executable program

Two jobs, IBMWRLK for batch and IBMWRLKC for CICS, located in the sample library SCEESAMP, replace OS PL/I library routines in an OS PL/I executable program with Language Environment routines. For more information about using IBMWRLK or IBMWRLKC, see IBM Enterprise PL/I for z/OS library (http://www.ibm.com/support/docview.wss?uid=swg27036735).

Link-editing fetchable executable programs

The PL/I FETCH and RELEASE statements dynamically load separate executable programs that can be subsequently invoked from the PL/I routine that fetches the executable program. There are some restrictions on the PL/I for MVS & VM statements that can be used in fetched procedures. These are described in the IBM Enterprise PL/I for z/OS library (http://www.ibm.com/support/docview.wss?uid=swg27036735).

Many of those restrictions have been removed with Enterprise PL/I for z/OS. See the IBM Enterprise PL/I for z/OS library (http://www.ibm.com/support/docview.wss?uid=swg27036735) for the use of FETCH with that compiler.

Fetchable (or dynamically loaded) modules should be link-edited into an executable program library that is subsequently made available for the *job step* by means of a JOBLIB or STEPLIB DD statement. The FETCH statement can access modules stored in link-pack areas (both the LPA and the ELPA). The search order for modules is defined by z/OS; see "Program library definition and search order" on page 81 for details.

The step that link-edits a fetchable executable program into a library requires the following linkage editor control statements:

- An ENTRY statement to define the entry point into the PL/I routine.
- A NAME statement to define the name used for the fetchable executable program. This statement is required if the NAME compiler option is not used and if the name is not specified in the DSN parameter in the SYSLMOD DD statement used to define the executable program library.

  The name or any alias by which the fetchable executable program is identified in the executable program library must appear in a FETCH or RELEASE statement within the scope of the invoking procedure.

```
//FETCH JOB
//STP       EXEC IEL1CL
//PLI.SYSIN DD *
:
    PL/I source(fetchable)
:
/*
//LKED.SYSLIN DD *
  ENTRY   procedure-name
  INCLUDE OBJMOD
  NAME FETCH1
/*
//LKED.SYSLMOD DD DSN=PRVLIB,...
//LKED.OBJMOD  DD DSN=&&LOADSET,DISP=(OLD,...
```

Figure 15. Example of link-editing a fetchable executable program

Language Environment-conforming COBOL or C modules can be loaded dynamically by the PL/I FETCH statement. The cataloged procedure IEL1CL includes both the compilation and the link-editing of the fetchable PL/I module. For more details on cataloged procedure IEL1CL, see the IBM Enterprise PL/I for z/OS library (http://www.ibm.com/support/docview.wss?uid=swg27036735).

PL/I link-time considerations

The product structure for PL/I has changed from the previous PL/I version. Most JCL and CLISTs that link-edit a PL/I application using the OS PL/I library must be changed. These changes include:

- The OS PL/I multitasking library PLITASK has been replaced by SIBMTASK, which is required to have multitasking support. SIBMTASK must be concatenated before SCEELKED.

  Enterprise PL/I for z/OS does not support multitasking. Language Environment continues to support PL/I multitasking for PL/I for MVS & VM as well as previous, supported levels of the PL/I product.
- The PLIBASE and SIBMBASE libraries have been replaced by:
  - SCEELKED, which contains resident routines that are linked with the application and are used to resolve external references at link-edit time.
  - SIBMMATH, which contains the stubs for old OS PL/I V2R3 math library routines. In link-edit steps, this library must precede SCEELKED if old math results are desired in a particular executable program.
  - SIBMCALL, which is required to provide PLICALLA and PLICALLB compatibility if PL/I for MVS & VM applications use OS PL/I PLICALLA or PLICALLB as an entry point. SIBMCALL must be concatenated before SCEELKED.
  - SIBMCAL2, which is very similar to SIBMCALL, but is only used with Enterprise PL/I for z/OS.

  Note: SCEELKED and SIBMCAL2 are the only libraries that apply for Enterprise PL/I for z/OS.

Fetching modules with different AMODEs

Language Environment supports the PL/I FETCH/RELEASE facility. No special considerations apply to this support when both the fetching executable program and the fetched executable programs have the AMODE(ANY) attribute or both have the AMODE(24) attribute.

Language Environment also supports the fetching of a load module that has a different AMODE attribute than the executable program issuing the FETCH statement. Language Environment performs the AMODE switches in this case, and the following constraints apply:

- If any fetched module is to execute in 24-bit addressing mode, the fetching module must be loaded into storage below 16M, and must have the RMODE(24) attribute regardless of its AMODE attribute.
- Any variables passed as parameters to a fetched routine must be addressable in the AMODE of the fetched procedure. For any fetched executable program that is to be executed in 24-bit addressing mode, you must ensure that:
  - If any parameter resides in a HEAP area, the BELOW suboption of the HEAP option is specified.
  - If any parameter resides in STATIC storage of the fetching executable program, the fetching executable program has the RMODE(24) attribute so that its STATIC storage is below 16M.
  - If any parameter resides in AUTOMATIC storage, no special considerations apply because ALL31(OFF) and STACK(,,BELOW) runtime options have been used. If the two constraints described previously cause problems, then you can copy the variable to a like variable with the AUTOMATIC attribute and pass the copy to the fetched AMODE(24) procedure, with the BELOW suboption of the HEAP option specified.
- PL/I object modules can be link-edited into overlay executable programs and run as overlay executable programs. Such programs have the attributes AMODE(24) and RMODE(24).

When a PL/I routine fetches another PL/I procedure, it is possible for a condition to arise in the fetched procedure for which a PL/I ON-unit was established in the fetching procedure.

PL/I imposes the restriction that if an ON-unit is established while the current addressing mode is 24-bit, and the condition is raised while the addressing mode is 31-bit, the ON-unit is not invoked. This is because PL/I must invoke the ON-unit in the addressing mode in which it was established. If the ON-unit was established in 24-bit addressing mode but the condition arose in 31-bit addressing mode, the code and data required to process the error might not even be addressable in 24-bit addressing mode.

Chapter 3. Using Extra Performance Linkage (XPLINK)

What is XPLINK?

Extra Performance Linkage (XPLINK) is a call linkage between programs that has the potential for a significant performance increase when used in an environment of frequent calls between small functions or subprograms.

Objectives

The C/C++ subroutine linkage on z/OS cannot be considered state-of-the art with respect to performance. It represents a disproportionate percentage of total execution time, higher yet for C++ than for C due to the many, typically small, functions. Depending on the style of programming, the total prolog/epilog cost may reach a double digit percentage even for C, and thus represents a significant potential for further program optimization.

The objective of XPLINK is to significantly speed up the linkage for C and C++ routines by using a downward-growing stack and by passing parameters in registers. It includes support for reentrant and non-reentrant code, for calls to functions in DLLs, and compatibility with old code.

With XPLINK, the linkage and parameter passing mechanisms for C and C++ are identical. If you link to a C function from a C++ program, you should still specify `extern C` to avoid name mangling.

The primary objective of XPLINK is to make subroutine calls as fast and efficient as possible by removing all nonessential instructions from the main path.

This is achieved by introducing the following:

- Stack growth from higher to lower addresses ("negative-" or "downward-growing"):
  - To eliminate overhead in stack frame allocation
  - To eliminate the need to check for inline stack overflow
  - To allow an improved epilog
  - To allow addressability to information (such as parameters) in the caller's stack frame
- Biasing the stack pointer (by 2048 bytes), so that small functions can save registers in their own stack frame before updating the stack pointer, avoiding address generation interlocks.
- Reassignment of registers (see “XPLINK register conventions” on page 35) to support more efficient saving and restoring of registers in function prologs and epilogs.
- Parameter passing in registers and accepting return values in registers.
- Elimination of Interlanguage Call (ILC) overhead (marking of stack frame) for non-ILC calls.
- Faster call sequences for inter-module calls.
- Passing the address of the data area associated with a function, its "environment," to the function on entry.
- No branching around Language Environment words.

© Copyright IBM Corp. 1991, 2015

- Use of relative branching for function calls where possible.
- Unification of the various (RENT and NORENT, DLL, and NODLL) function pointer implementations, reducing the costs of all operations involving function pointers.

An important additional objective is reducing the module size in memory, which is accomplished by eliminating unused information in function blocks.

Support for XPLINK

XPLINK support is available for applications running under the following environments:

- Batch
- TSO/E
- z/OS UNIX

It is not available for applications running under CICS before CICS TS 3.1.

XPLINK support is available with the compiler for the following programming language:

- z/OS C and C++

There is limited XPLINK support in the following areas:

- DB2 — EXEC SQL calls are defined using linkage OS which is supported from XPLINK callers.
- IMS — Language Environment provides the CTDLI interface (a `ctdli()` function call) for C and C++ callers. This interface is defined in the `ims.h` header as using linkage OS which is supported from XPLINK callers.
- In general, any system service that is defined as using linkage OS is a supported call from an XPLINK program.
  - If it requires OS linkage conventions but not a Language Environment-conforming stack (that is, it only needs a 72-byte save area), then the function can be defined as OS_NOSTACK (the default when `#pragma linkage(...,OS)` is specified). This option provides the best performance because the compiler generates OS linkage calling conventions directly – no call through glue code is required.
  - If it requires OS linkage conventions and a Language Environment-conforming stack, then the function can be defined as OS_UPSTACK. For this option, the compiler generates a call through Language Environment glue code that switches to OS linkage conventions and the non-XPLINK upward-growing stack.

  For more information, see either *z/OS Language Environment Writing Interlanguage Communication Applications* or *z/OS XL C/C++ Language Reference*.

For more information, see “XPLINK restrictions” on page 40.

XPLINK concepts and terms

XPLINK

Extra Performance Linkage (XPLINK) is a new call linkage between programs which has the potential for a significant performance increase when used in an environment of frequent calls between small functions or subprograms.

non-XPLINK application
A non-XPLINK application is one in which none of the executables involved have been compiled with the XPLINK compiler option specified.

XPLINK application
An XPLINK application is one in which at least one of the executables involved as been compiled with the XPLINK compiler option specified. XPLINK and non-XPLINK compiled source code cannot be link-edited together into the same executable, but XPLINK and non-XPLINK executables (for example, DLLs) can be mixed in the same application. The performance advantage from XPLINK is increased as the percentage of XPLINK executables in an application increases.

XPLINK environment
An XPLINK environment is one in which Language Environment has initialized the necessary resources to run an XPLINK application (for example, a downward-growing stack). This is accomplished by either invoking an initial program that was compiled with the XPLINK compiler option specified, or specifying the XPLINK(ON) runtime option.

downward-growing stack
The standard Language Environment stack is upward-growing. For XPLINK, a main feature of its more efficient program prolog code is a program stack which grows from higher to lower addresses. This provides implicit protection against exceeding available stack storage, rather than having to make an explicit test, and therefore reduces path length.

guard page
A write-protected area of storage at the low address end of a downward-growing stack segment. This allows a stack frame (smaller than the size of the guard page) to be allocated by storing into the low address of the stack frame. Stack segment overflow and extension is triggered by the exception resulting from a prolog storing into the guard page (implicit stack overflow detection).

glue code
With respect to XPLINK compatibility, glue code refers to the code inserted between XPLINK and non-XPLINK executables, which converts the stack structure, registers and parameter list into a format suitable for the called function, and then restores the environment upon return.

The XPLINK stack

Stack storage is automatically created by Language Environment and is used for routine linkage and automatic storage. This topic describes the way the XPLINK stack differs from the standard Language Environment stack, which is described in detail in “Stack storage overview” on page 170.

The prolog of a function usually allocates space (referred to as a "frame", "Stack Frame", or "DSA" - dynamic storage area) in the Language Environment-provided stack segment for its own purposes and to support calls to other routines.

Figure 16 on page 32 shows the structure of the standard Language Environment stack. Note that the DSAs in the standard (upward-growing) Language Environment stack are allocated from lower to higher addresses. Figure 17 on page 32 shows how the XPLINK (downward-growing) stack is different, specifically that the DSAs are allocated from higher to lower addresses, with the presence of the guard page to mark the bottom of the stack.

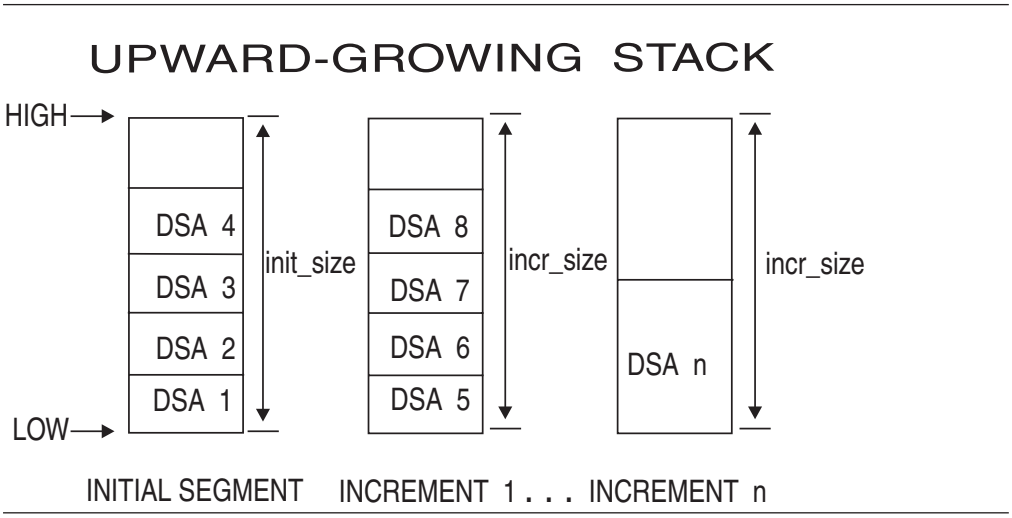

Figure 16. Standard stack storage model

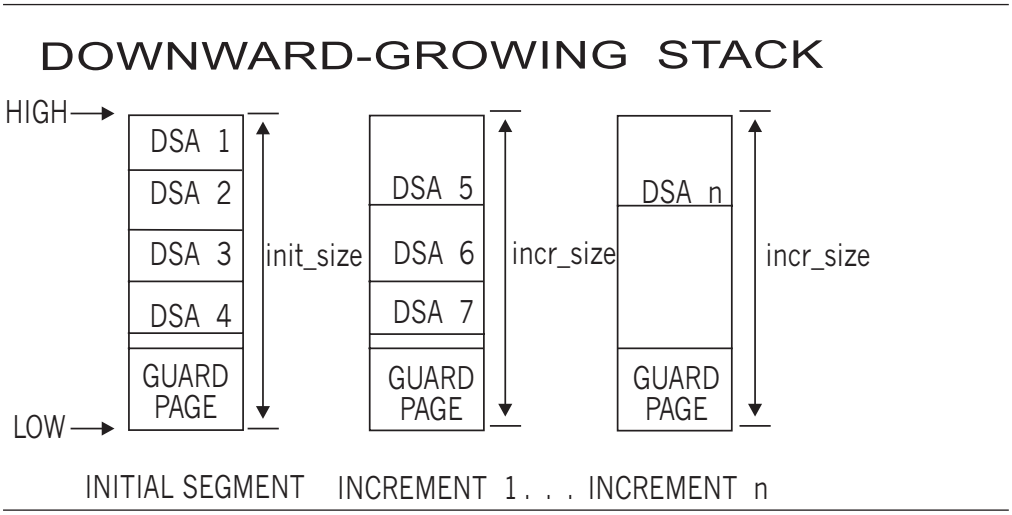

Figure 17. XPLINK stack storage model

The XPLINK stack frame layout

Figure 18 on page 33 shows the XPLINK stack frame layout.

The XPLINK stack register (general-purpose register (GPR) 4) is "biased," meaning it points to a location 2048 bytes before the stack frame for the currently active routine. It grows from numerically higher storage addresses to numerically lower ones, that is, the stack frame for a called function is normally at a lower address than the calling function. The stack frame is aligned on a 32-byte boundary.

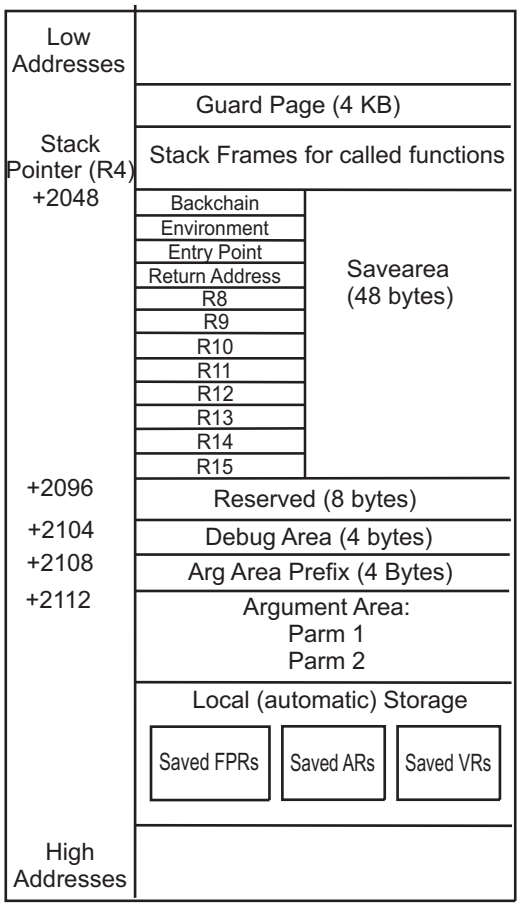

Figure 18. XPLINK stack frame layout

Save area (48 bytes): This area is always present when a stack frame is required. It holds up to 12 registers. The first two words hold, optionally, GPRs 4 and 5, which contain the address of the previous stack frame and the environment address passed into the function. This is followed by the two words containing GPR 6, which may or may not hold the actual entry point address (depending on the type of call), and GPR 7, the return address. GPR 8 through GPR 15, as used by the called function, are saved in the following 32 bytes. Table 7 on page 35 shows the XPLINK register conventions.

Except when registers are saved in the prolog, this area may not be altered by compiled code. The PPA1 GPR Save Mask indicates which GPRs are saved in this area by the prolog.

Stack overflow is detected when the STM instruction stores into the write-protected guard page while trying to save the registers in this save area.

Storage of the Backchain field in the save area is triggered by the optional XPLINK(BACKCHAIN) compiler option (or at the convenience of the compiler). This adds slightly to the cost of the prolog code, but may increase the serviceability characteristics of the application by providing a DSA backchain pointer in the save area. Note that this backchain pointer may or may not be valid, depending on the options specified when a function was compiled.

The third slot in the save area contains the value in GPR 6 on entry to the routine. If the routine was called with a BASR instruction, this will be the address of the function's entry point. The fourth slot contains the return address. The return point can be examined to determine how the function was called: if with a BASR instruction then the entry point address can be found in the third slot of the save area; if with a branch relative instructive, then the entry point can be computed from the return address and the branch offset contained in the branch relative instruction.

Reserved (8 bytes): This area is always present and is for the exclusive use of the runtime environment. It is uninitialized by compiled code.

Argument area prefix (4 bytes): This area is always present and is for the exclusive use of the runtime environment. It is uninitialized by compiled code.

Argument area (minimum 16 bytes): This area (at a fixed DSA offset of 64 bytes into the caller's stack frame) contains the argument lists which are passed on function calls made by the function associated with this stack frame. The called function finds its parameters in the caller's stack frame. Arguments passed in registers are not present in the argument area in the save area. This can be overridden by the optional XPLINK(STOREARGS) compiler option. This adds slightly to the cost of the prolog code, but might increase the serviceability characteristics of the application by providing a complete record of the arguments passed as input to a function.

A minimum of four words (16 bytes) is always allocated.

Local storage: Local storage is the space owned by the executing procedure. It can be used for its local variables and temporaries.

Total stack frame size: The total stack frame size is calculated by adding the preceding fields and by rounding the sum up to a quadword boundary.

Stack overflow

To maximize function call performance, XPLINK replaces the explicit inline check for overflow with a storage protect mechanism that detects stores past the end of the stack segment.

The stack floor is the lowest usable address of the current stack segment. Toward lower addresses, it is preceded by a store-protected guard page used to detect stack overflows.

Availability of space for a stack frame is ensured in the function prolog usually by storing into the start of the called function's frame. In case of overflow, this triggers an exception which in turn causes a discontiguous extension of the stack by Language Environment. Functions with a DSA larger than the guard page use the stack floor address in the CAA to verify space availability. Allocation and deallocation of extensions is transparent to the application.

To make the stack appear contiguous to the application, a small stack frame containing all fields up to and including the Argument area will be allocated in the new stack segment for use by the called function, and the contents of the caller's stack, up to the end of the argument area, is copied into the new stack segment. The length of the argument list expected is available in the called function's PPA1 except for `vararg` functions, where the entire argument area in the calling function must be copied.

Stores into the guard page done outside the prolog done outside `alloca()` built-in processing should be treated as invalid and cause the application to be terminated.

Stack overflow is detected by the STM instruction that is used to save registers in this save area.

Initial stack segment size and the stack segment increment size are controlled by the STACK runtime option (see *z/OS Language Environment Programming Reference*).

XPLINK register conventions

XPLINK introduces a register scheme which is different from standard OS linkage, in order to optimize the performance of saving and restoring registers in function prologs and epilogs. The registers which are saved in the register save area of the XPLINK stack frame are described in "Save area (48 bytes)" on page 33.

Table 7 shows the layout of the XPLINK interface.

Table 7. Comparing non-XPLINK and XPLINK register conventions

	Non-XPLINK	**XPLINK**
Stack pointer	Reg 13	Reg 4 (biased; see "The XPLINK stack frame layout" on page 32)
Return Address	Reg 14	Reg 7
Entry point on entry	Reg 15	Reg 6 (not guaranteed; a routine may be called via branch relative)
Environment	Reg 0 (writable static)	Reg 5
CAA Address	Reg 12	Reg 12
Input parameter list	address in R1	Located at offset 2112 ('840'x) off R4 (fixed location in caller's stack frame). First three words are passed in R1-R3, floating point values in FPR0, 2, 4, 6.
Return code	Reg 15	R3 (extended return value in R1,R2)
Start address of callee's stack frame	Caller's NAB value	Caller's Reg 4 - DSA size
End address of callee's stack frame	Caller's NAB value + DSA size	Caller's Reg 4
Where caller's registers are saved	R0-R12 saved in caller's stack frame R13 saved in callee's stack frame R14-R15 saved in caller's stack frame	R0 not saved, not preserved R1-R3 not saved, not preserved R4 not saved, recalculated (or saved, restored) R5 not saved, not preserved R6 saved in callee's stack frame, not restored R7-R15 saved in callee's stack frame (R7 is the return register and is not guaranteed to be restored)

See *z/OS Language Environment Vendor Interfaces* for additional information about register usage and conventions.

XPLINK parameter passing and return code conventions

XPLINK uses a logical argument list consisting of contiguous 32-bit words, where some arguments are passed in registers and some in storage.

The argument list is located in the caller's stack frame at a fixed offset (+2112) from the stack register (GPR 4). It provides space for all arguments, including those passed in registers. It also includes an extra unused word (4 bytes), which might be required in compatibility situations, at the end of the argument area. Its size is sufficient to contain all the arguments passed on any call statement from a procedure associated with the stack frame.

Function return values are also returned in registers. When the return value will not fit in registers, it is always returned in a buffer allocated by the caller. For more details on XPLINK parameter and return value conventions, see *z/OS Language Environment Vendor Interfaces*.

When XPLINK should be used

The type of application that could benefit most from using XPLINK is an application that makes many calls to small functions. C++ is a good example, since the OO programming model makes this possible. C applications that make many function calls might also be suitable for XPLINK.

To further enhance the performance of an XPLINK application, the IEEE binary floating-point math library should be used by specifying the FLOAT(IEEE) compiler option. This math library has been recompiled entirely in XPLINK, while the Hexadecimal math library remains non-XPLINK and therefore requires a call through glue code from XPLINK applications.

When XPLINK should not be used

Functions compiled XPLINK and NOXPLINK cannot be combined in the same program object (except when the `#pragma linkage(OS)` directive is used in C, or `extern` in C++; see *z/OS Language Environment Writing Interlanguage Communication Applications* for more information).

While XPLINK can provide a significant performance enhancement to the right application, it can also degrade the performance of an application that is not suitable for XPLINK.

One way to call an XPLINK function from non-XPLINK is to use the DLL call mechanism. But there is an overhead cost associated with calls made from non-XPLINK to XPLINK, and from XPLINK to non-XPLINK. This overhead includes the need to swap from one stack type to another and to convert the passed parameters to the style accepted by the callee. Applications that make many "cross-linkage" calls might lose any benefit obtained from the parts that were compiled XPLINK, and in fact performance could be degraded from the pure non-XPLINK case. If the number of pure XPLINK function calls is significantly greater than the number of "cross-linkage" calls, then the cost saved on XPLINK calls will recover some of the costs associated with calls that involve stack swapping.

When you introduce an XPLINK program object into your application, for example an XPLINK version of a vendor-DLL which your application uses, then your application must now run in an XPLINK environment (this is controlled by the XPLINK runtime option). In an XPLINK environment, an XPLINK version of the

C/C++ runtime library (RTL) is used. You cannot have both the non-XPLINK and XPLINK versions of the C/C++ RTL active at the same time, so in an XPLINK environment, non-XPLINK callers of the C/C++ runtime library also incurs this stack swapping overhead.

The maximum performance improvement can be achieved by recompiling an entire application XPLINK. The further the application gets from pure XPLINK, the less the performance improvement, and at some point you might see a performance degradation.

The only compiler that supports the XPLINK compiler option is the z/OS XL C/C++ compiler. All COBOL and PL/I programs are non-XPLINK, and therefore calls between COBOL or PL/I and XPLINK-compiled C/C++ are cross-linkage calls and will incur the stack swapping overhead. For more information about making ILC calls with XPLINK, see *z/OS Language Environment Writing Interlanguage Communication Applications*.

If the application contains C or C++ and the XPLINK(ON) runtime option is specified, then the XPLINK-compiled version of the C runtime library (RTL) is loaded, which will run on the downward-growing stack. When non-XPLINK functions call C RTL functions in this environment, a swap from the upward-growing stack to the downward-growing stack will occur. This results in additional overhead that could cause a performance penalty. Applications that make heavy use of the C RTL from non-XPLINK callers should be aware of this, and if necessary for performance reasons, either run in a pure non-XPLINK environment with XPLINK(OFF) (the default in this case), or convert as much of the application to XPLINK as possible and run with XPLINK(ON).

Applications that use Language Environment environments that are not supported in an XPLINK environment, or that use products that are not supported in an XPLINK environment (for example, CICS before CICS TS 3.1), cannot be recompiled as XPLINK applications.

How is XPLINK enabled?

XPLINK is enabled on several levels, including a compiler option and several runtime options.

XPLINK compiler option

The z/OS XL C/C++ XPLINK compiler option produces an object that uses the XPLINK calling conventions. This compiler option is described in detail in *z/OS XL C/C++ User's Guide*.

XPLINK runtime option

Language Environment initializes the enclave as an XPLINK environment if the initial program is compiled XPLINK or the XPLINK(ON) runtime option is specified. If the initial program is non-XPLINK but may call an XPLINK program later in its execution, then the XPLINK(ON) runtime option is required so that the XPLINK resources will be allocated and available when they are needed.

Applications that consist only of non-XPLINK functions (for example COBOL or PL/I) should not execute with the XPLINK(ON) runtime option, because this option provides no benefit when not running an XPLINK application, and could result in performance degradation. In fact, for non-XPLINK applications, enabling this runtime option could result in abends for applications that have not been

tested to run in an XPLINK environment, for example, if they use resources or subsystems that are restricted in an XPLINK environment. See “XPLINK restrictions” on page 40.

No AMODE 24 routines are allowed in an enclave that uses XPLINK. When an application is running in an XPLINK environment (that is, either the XPLINK(ON) runtime option was specified, or the initial program was compiled XPLINK), the ALL31 runtime option will be forced to ON. No message will be issued to indicate this action. In this case, if a Language Environment runtime options report is generated using the RPTOPTS runtime option, the ALL31 option will be reported as "Override" under the LAST WHERE SET column.

When an application is running in an XPLINK environment (that is, either the XPLINK(ON) runtime option was specified, or the initial program was compiled XPLINK), the STACK runtime option will be forced to STACK(,,ANY). Only the third suboption of the STACK runtime option is changed by this action, to indicate that stack storage can be allocated anywhere in storage. No message will be issued to indicate this action. In this case, if a Language Environment runtime options report is generated using the RPTOPTS runtime option, the STACK option will be reported as "Override" under the LAST WHERE SET column.

Related runtime options

The STACK runtime option controls the allocation of the thread's stack storage for the standard Language Environment upward growing stack and the XPLINK downward-growing stack. STACK controls storage allocation for the initial thread in a multi-threaded application.

Similarly, the THREADSTACK runtime option controls the allocation of stack storage for the upward and downward-growing stacks, for other than the initial thread in a multi-threaded application. The THREADSTACK runtime option replaces the NONIPTSTACK runtime option. The NONIPTSTACK runtime option remains for compatibility, but was not enhanced for XPLINK.

Building and running an XPLINK application

The detailed procedures for building and running non-XPLINK Language Environment-conforming applications can be found in other topics in this information.

The procedures for building XPLINK Language Environment-conforming applications can be summarized as:

1. Compile the application with an XPLINK compiler (the z/OS XL C/C++ compiler) using the XPLINK compiler option.
2. Link edit, with the DFSMS binder, the application (specifying a PDSE or HFS file as the output data set) with the object files and the following Language Environment input:
   - Where SYSLIB for non-XPLINK applications usually lists the SCEELKED, SCEELKEX, SCEEOBJ and SCEECPP data sets, the SYSLIB for link-editing an XPLINK application replaces these with the SCEEBND2 data set. SCEEBND2 contains all object files necessary for building Language Environment-conforming XPLINK applications. If you attempt to link edit an XPLINK application using the non-XPLINK static libraries, or vice versa, you will receive the binder error message IEW2469E indicating a mismatch in linkage type between function reference and definition.

- If the XPLINK application calls C runtime library (RTL) functions, it must include the XPLINK C RTL side-deck CELHS003 that is in the SCEELIB data set. This is included automatically by `c89` when the `-Wl,xplink` option is specified. See *z/OS UNIX System Services Command Reference* or *z/OS XL C/C++ User's Guide* for information about building XPLINK applications in batch, TSO/E, and z/OS UNIX.
- If the XPLINK application calls Language Environment AWIs or CWIs, it must include the XPLINK Language Environment side-deck CELHS001 that is in the SCEELIB data set.
- If the XPLINK application is written in C++, it picks up Language Environment C++ RTL definitions from the XPLINK C++ side-deck CELHSCPP that is in the SCEELIB data set. This side-deck is used instead of the SCEECPP data set (the SCEECPP data set is used by non-XPLINK applications).

3. Run the application by providing both SCEERUN and SCEERUN2 data sets in the MVS program search order, for example STEPLIB or LNKLST.

   SCEERUN and SCEERUN2 can be specified in any search order. The XPLINK(ON) runtime option is required if the initial program in the application is non-XPLINK and XPLINK programs may be called (via DLL).

Other considerations

When you compile and link edit a program, the resulting executable is either XPLINK or non-XPLINK. That is, XPLINK-compiled parts and NOXPLINK-compiled parts cannot be link-edited together in the same program object. The one exception to this is the use of the `#pragma linkage(OS)` directive for C (or `extern "OS"` for C++). The intent here is to allow the calling of existing assembler programs that typically perform some function that cannot be done in C or C++ without having to rewrite the assembler program using XPLINK conventions (although this could be done if performance is critical, see the topic on "Combining C or C++ and Assembler" in *z/OS XL C/C++ Programming Guide*). XPLINK and non-XPLINK executables can be mixed at run time, for example by using DLL function calls. An XPLINK function can call a non-XPLINK function in a separate DLL, and vice versa. If needed, glue code is inserted automatically by Language Environment to perform the necessary stack switching and parameter passing adjustments.

The existing static/resident libraries cannot be used when building XPLINK applications. They contain static parts that get resolved by the binder before the entries in the XPLINK side-decks.

The DFSMS binder *must* be used to create an XPLINK application. The resulting program module exploits the format of the PM3 Program Object.

There are also XPLINK versions of locales and iconv converters which are provided for use by XPLINK applications.

There is a new XPLINK-compiled version of the Curses archive file. It is called `libcursesxp.a`, and resides in `/usr/lib`. The usage is the same as the old archive file except the compiler and environment must be set up using XPLINK. The following is an example of compiling `test.c` with the Curses XPLINK archive:

```
c89 -o test -Wc,xplink -Wl,xplink test.c -lcursesexp
```

XPLINK / non-XPLINK compatibility

Compatibility with XPLINK only exists for Language Environment-conforming non-XPLINK applications which are able to run AMODE(31).

XPLINK Compatibility Support is defined as the ability for programs compiled NOXPLINK to transparently call programs that are compiled XPLINK, and vice versa. The programs can be non-XPLINK C or C++ (Fastlink), COBOL, PL/I or OS Linkage Assembler.

This transparent compatibility is provided at the Program Object boundary. It is also provided at the load module boundary, for compatibility with prelinker-built executables. That is, a Program Object (or load module) containing a caller of one linkage type (XPLINK or NOXPLINK) can call a function compiled with the opposite linkage type as long as the called function resides in a different Program Objector or load module. Program Objects can reside in either a PDSE or the HFS; load modules reside in PDSs.

Compatibility requires that the differences between stack structures, register conventions, and parameter lists are handled. Language Environment will automatically insert the glue code which performs the necessary transitions between XPLINK and non-XPLINK functions.

The main call linkage supporting XPLINK Compatibility is the DLL call mechanism, but C's `fetch()` and Language Environment's CEEFETCH Assembler macro are also supported.

The following are not supported for XPLINK:

- COBOL dynamic call of an XPLINK function
- PL/I FETCH
- CEELOAD

XPLINK restrictions

- In general, XPLINK-compiled objects cannot be statically bound with non-XPLINK-compiled objects. A program object (or load module) consists of either XPLINK objects or non-XPLINK objects.

  The one exception to this is when an XPLINK function calls a function defined as either OS_UPSTACK or OS_NOSTACK. In this case the called function is non-XPLINK and uses OS linkage conventions. However, since the bind step of XPLINK and non-XPLINK executables uses different data sets (see "Planning to link-edit and run" on page 8), all external references from the non-XPLINK function must be resolved using the XPLINK link-edit data sets. For example, if a called OS_UPSTACK function makes a call to the C runtime (RTL), the C RTL function must be resolved via the CELHS003 side deck in SCEELIB. It cannot use the SCEELKED static stubs since these are not used to bind XPLINK objects.

  The intent of OS_UPSTACK is to be able to call a non-XPLINK function that is not going to be recompiled or rewritten as XPLINK, but is itself a leaf routine and does not make any further calls. The intent of OS_NOSTACK is to call non-XPLINK functions that only need an OS linkage register save area, and are either leaf routines or make calls to other system services that do not use the Language Environment stack.
- XPLINK Assembler programs cannot resolve the address and environment of other XPLINK functions in order to call them. If a function pointer is passed to

an XPLINK Assembler program, it can be used to call that function as long as XPLINK calling conventions are used (see *z/OS Language Environment Vendor Interfaces*). There is currently no CALL macro support for XPLINK.

The intent of the XPLINK Assembler support is to be able to call an Assembler function that was rewritten using XPLINK conventions (either for performance reasons or to perform some function not easily implemented in C or C++), but is itself a leaf routine and does not make any further calls.

- Calls between XPLINK and non-XPLINK functions are allowed when they cross program object (or load module) boundaries. The use of DLLs is the primary method, where a function in a non-XPLINK DLL calls another function in an XPLINK DLL (or vice versa). The `fetch()` function also provides compatibility between XPLINK and non-XPLINK functions.
- The following do not support calls to XPLINK functions:
  - COBOL dynamic call
  - PL/I FETCH
- XPLINK functions can only call non-XPLINK functions that are also Language Environment-conforming, that is, they were compiled using a Language Environment-conforming compiler.
- XPLINK applications must run AMODE 31, so the ALL31 runtime option will be forced ON. This means all non-XPLINK applications that can call or be called by an XPLINK application must also run AMODE 31.
- Make a reference from XPLINK code into non-XPLINK code only if the reference is by an imported function or variable, or the function pointer is a parameter into the XPLINK code. This prevents incompatible references to a non-XPLINK function entry point.
- XPLINK applications must be built using the DFSMS Binder, and they must reside in either a PDSE or the HFS. The Prelinker cannot be used to create an XPLINK application.
- The following environments and subsystems do not support applications that have been compiled XPLINK:
  - Releases of CICS TS before CICS TS 3.1 (Chapter 25, “Running applications under CICS,” on page 397)
  - DB2 stored procedures cannot be compiled XPLINK (Chapter 26, “Running applications under DB2,” on page 413)
  - A nested (child) enclave must run with the same XPLINK environment as its parent (Chapter 31, “Using nested enclaves,” on page 525)
  - The CEEBXITA and CEEBINT user exits cannot be XPLINK (Chapter 28, “Using runtime user exits,” on page 421
  - PICI
  - System Programmer C (SPC)
  - C Multitasking Facility (C MTF)
  - PL/I Multitasking

Chapter 4. Building and using dynamic link libraries (DLLs)

The z/OS dynamic link library (DLL) facility provides a mechanism for packaging programs and data into load modules (DLLs) that may be accessed from other separate load modules. A DLL can *export* symbols representing routines that may be called from outside the DLL, and can *import* symbols representing routines or data or both in other DLLs, avoiding the need to link the target routines into the same load module as the referencing routine. When an application references a separate DLL for the first time, it is automatically loaded into memory by the system.

There are two types of DLLs: simple and complex. A simple DLL contains only DLL code in which special code sequences are generated by the compiler for referencing functions and external variables, and using function pointers. With these code sequences, a DLL application can reference imported functions and imported variables from a DLL as easily as it can non-imported ones.

A complex DLL contains mixed code, that is, some DLL code and some non-DLL code. A typical complex DLL might contain some C++ code, which is always DLL code, and some C object modules compiled with the `NODLL` compiler option bound together.

This topic defines DLL concepts and shows how to build simple DLLs and DLL Applications.

Support for DLLs

DLL support is available for applications running under the following systems:

- z/OS batch
- CICS
- IMS
- TSO
- z/OS UNIX

It is not available for applications running under SP C, CSP or MTF.

Note: For CICS, all potential DLL executable modules are registered in the CICS PPT control table in the CICS environment and are invoked at run time.

DLL support is available with the compilers for the following programming languages:

- C and C++
- Enterprise COBOL for z/OS
- COBOL for OS/390 & VM
- Enterprise PL/I for z/OS and OS/390
- High Level Assembler (HLASM) Release 5

Note: PL/I for MVS & VM and OS PL/I 2.3 do not support the creation of DLLs or the calling of DLLs.

© Copyright IBM Corp. 1991, 2015

DLL concepts and terms

Function
In this topic, function is used to generically refer to a callable routine or program, and is specifically applicable to C and C++. In COBOL a function would be a COBOL program or method. In Enterprise PL/I a function would be a PL/I procedure.

Variable
In this topic, variable is used to generically refer to a data item, such as a static variable in C/C++.

Application
All the code executed from the time an executable program module is invoked until that program, and any programs it directly or indirectly calls, is terminated.

DLL An executable module that exports functions, variable definitions, or both, to other DLLs or DLL applications. The executable code and data are bound to the program at run time. The code and data in a DLL can be shared by several DLL applications simultaneously. It is important to note that compiling code with the `DLL` option does not mean that the produced executable will be a DLL. To create a DLL, you must compile with the `DLL` option and export one or more symbols.

DLL application
An application that references imported functions, imported variables, or both, from other DLLs.

DLL code
DLL code is code that is compiled with the `DLL` option of the C and COBOL compilers, code that is compiled with the `RENT` option of the Enterprise PL/I compiler, or any code compiled with the C++ compiler.

Executable program (or executable module)
A file which can be loaded and executed on the computer. z/OS supports two types:

Load module
An executable residing in a PDS.

Program object
An executable residing in a PDSE or in the z/OS UNIX file system.

Object code (or object module)
A file output from a compiler after processing a source code module, which can subsequently be used to build an executable program module.

Source code (or source module)
A file containing a program written in a programming language.

Imported functions and variables
Functions and variables that are not defined in the executable module where the reference is made, but are defined in a referenced DLL.

Non-imported functions and variables
Functions and variables that are defined in the same executable module where a reference to them is made.

Exported functions or variables
Functions or variables that are defined in one executable module and can be referenced from another executable module. When an exported function

or variable is referenced within the executable module that defines it, the exported function or variable is also nonimported.

Writable Static Area (WSA)
An area of memory that is modifiable during program execution. Typically, this area contains global variables and function and variable descriptors for DLLs.

Function descriptor
An internal control block containing information needed by compiled code to call a function.

Variable descriptor
An internal control block containing information about the variable needed by compiled code.

Loading a DLL

A DLL is loaded implicitly when an application references an imported variable or calls an imported function. DLLs can be explicitly loaded by calling `dllload()` or `dlopen()`. Due to optimizations performed, the DLL implicit load point may be moved and is only done before the actual reference occurs.

Loading a DLL implicitly

When an application uses functions or variables defined in a DLL, the compiled code loads the DLL. This implicit load is transparent to the application. The load establishes the required references to functions and variables in the DLL by updating the control information contained in function and variable descriptors.

If a C++ DLL contains static classes, their constructors are run when the DLL is loaded, typically before the main function runs. Their destructors run once after the main function returns.

To implicitly load a DLL from C or C++, do one of the following:

- Statically initialize a variable pointer to the address of an exported DLL variable.
- Reference a function pointer that points to an exported function.
- Call an exported function.
- Reference (use, modify, or take the address of) an exported variable.
- Call through a function pointer that points to an exported function.

To implicitly load a DLL from COBOL, do one of the following:

- Call a function that is exported from the DLL.
- Set a COBOL procedure-pointer to a function that is exported from the DLL.
- Invoke a method that is defined in a class contained in the DLL.

When the first reference to a DLL is from static initialization of a C or C++ variable pointer, the DLL is loaded before the main function is invoked. Any C++ constructors are run before the main function is invoked.

Loading a DLL explicitly

The use of DLLs can also be explicitly controlled by C/C++ application code at the source level. The application uses explicit source-level calls to one or more runtime services to connect the reference to the definition. The connections for the reference and the definition are made at runtime.

The DLL application writer can explicitly call the following C runtime services:

- `dllload()`, which loads the DLL and returns a handle to be used in future references to this DLL
- `dllqueryfn()`, which obtains a pointer to a DLL function
- `dllqueryvar()`, which obtains a pointer to a DLL variable
- `dllfree()`, which frees a DLL loaded with `dllload()`

The following runtime services are also available as part of the Single UNIX Specification, Version 3:

- `dlopen()`, which loads the DLL and returns a handle to be used in future references to this DLL
- `dlclose()`, which frees a DLL that was loaded with `dlopen()`
- `dlsym()`, which obtains a pointer to an exported function or exported variable
- `dlerror()`, which returns information about the last DLL failure on this thread that occurred in one of the `dlopen()` family of functions

While you can use both families of explicit DLL services in a single application, you cannot mix usage across those families. So a handle returned by `dllload()` can only be used with `dllqueryfn()`, `dllqueryvar()`, or `dllfree()`. And a handle returned by `dlopen()` can only be used with `dlsym()` and `dlclose()`.

Since the `dlopen()` family of functions are part of the Single UNIX Specification, Version 3, they should be used in new applications if cross-platform portability is a concern.

For more information about the C runtime services, see *z/OS XL C/C++ Runtime Library Reference*.

To explicitly call a DLL in your application:

- Determine the names of the exported functions and variables that you want to use. You can get this information from the DLL provider's documentation or by looking at the definition side-deck file that came with the DLL. A definition side-deck is a directive file that contains an `IMPORT` control statement for each function and variable exported by that DLL.
- If you are using the `dllload()` family of functions, include the DLL header file <dll.h> in your application. If you are using the `dlopen()` family of functions, include the DLL header file <dlfcn.h> in your application.
- Compile your source as usual.
- Bind your object with the binder using the same AMODE value as the DLL.

  Note: You do not need to bind with the definition side-deck if you are calling the DLL explicitly with the runtime services, since there are no references from the source code to function or variable names in the DLL for the binder to resolve. Therefore the DLL will not be loaded until you explicitly load it with the `dllload()` or `dlopen()` runtime service.

"Explicit use of a DLL in a C application" and "Explicit use of a DLL in a COBOL/C application" on page 49 have examples of applications that use explicit DLL calls.

Explicit use of a DLL in a C application

The following example shows explicit use of a DLL in a C application.

```
#include <dll.h>
#include <stdio.h>
#include <string.h>

#ifdef __cplusplus
  extern "C" {
#endif

  typedef int (DLL_FN)(void);

#ifdef __cplusplus
  }
#endif

#define FUNCTION        "FUNCTION"
#define VARIABLE        "VARIABLE"

static void Syntax(const char* progName) {
  fprintf(stderr, "Syntax: %s <DLL-name> <type> <identifier>\n"
                  "  where\n"
                  "  <DLL-name> is the DLL to load,\n"
                  "  <type> can be one of FUNCTION or VARIABLE\n"
                  "  and <identifier> is the function or variable\n"
                  "  to reference\n", progName);
  return;
}

main(int argc, char* argv[]) {
  int value;
  int* varPtr;
  char* dll;
  char* type;
  char* id;
  dllhandle* dllHandle;

  if (argc != 4) {
    Syntax(argv[0]);
    return(4);
  }
  dll  = argv[1];
  type = argv[2];
  id   = argv[3];

  dllHandle = dllload(dll);
  if (dllHandle == NULL) {
    perror("DLL-Load");
    fprintf(stderr, "Load of DLL %s failed\n", dll);
    return(8);
  }

  if (strcmp(type, FUNCTION)) {
    if (strcmp(type, VARIABLE)) {
      fprintf(stderr,
        "Type specified was not " FUNCTION " or " VARIABLE "\n");
      Syntax(argv[0]);
      return(8);
    }
    /*
     * variable request, so get address of variable
     */
    varPtr = (int*)(dllqueryvar(dllHandle, id));
    if (varPtr == NULL) {
      perror("DLL-Query-Var");
      fprintf(stderr, "Variable %s not exported from %s\n", id, dll);
      return(8);
    }
    value = *varPtr;
```

```
    printf("Variable %s has a value of %d\n", id, value);
  }
  else {
    /*
     * function request, so get function descriptor and call it
     */
    DLL_FN* fn = (DLL_FN*) (dllqueryfn(dllHandle, id));
    if (fn == NULL) {
      perror("DLL-Query-Fn");
      fprintf(stderr, "Function %s() not exported from %s\n", id, dll);
      return(8);
    }
    value = fn();
    printf("Result of call to %s() is %d\n", id, value);
  }
  dllfree(dllHandle);

  return(0);
}
```

The following example shows explicit use of a DLL in an application using the dlopen() family of functions.

```
  #define _UNIX03_SOURCE

  #include <dlfcn.h>
  #include <stdio.h>
  #include <string.h>

  #ifdef __cplusplus
    extern "C" {
  #endif

    typedef int (DLL_FN)(void);

  #ifdef __cplusplus
    }
  #endif

  #define FUNCTION        "FUNCTION"
  #define VARIABLE        "VARIABLE"

  static void Syntax(const char* progName) {
    fprintf(stderr, "Syntax: %s <DLL-name> <type> <identifier>\n"
                    "  where\n"
                    "  <DLL-name> is the DLL to open,\n"
                    "  <type> can be one of FUNCTION or VARIABLE,\n"
                    "  and <identifier> is the symbol to reference\n"
                    "  (either a function or variable, as determined by"
                    " <type>)\n", progName);
    return;
  }

main(int argc, char* argv[]) {
    int value;
    void* symPtr;
    char* dll;
    char* type;
    char* id;
    void* dllHandle;
    if (argc != 4) {
      Syntax(argv[0]);
      return(4);
    }
    dll  = argv[1];
    type = argv[2];
    id   = argv[3];
```

```
  dllHandle = dlopen(dll, 0);
  if (dllHandle == NULL) {
    fprintf(stderr, "dlopen() of DLL %s failed: %s\n", dll, dlerror());
    return(8);
  }

  /*
   * get address of symbol (may be either function or variable)
   */
  symPtr = (int*)(dlsym(dllHandle, id));
  if (symPtr == NULL) {
    fprintf(stderr, "dlsym() error: symbol %s not exported from %s: %s\n"
                  , id, dll, dlerror());
    return(8);
  }
  if (strcmp(type, FUNCTION)) {
    if (strcmp(type, VARIABLE)) {
      fprintf(stderr,
        "Type specified was not " FUNCTION " or " VARIABLE "\n");
      Syntax(argv[0]);
      return(8);
    }
    /*
     * variable request, so display its value
     */
    value = *(int *)symPtr;
    printf("Variable %s has a value of %d\n", id, value);
  }
  else {
    /*
     * function request, so call it and display its return value
     */
    value = ((DLL_FN *)symPtr)();
    printf("Result of call to %s() is %d\n", id, value);
  }
  dlclose(dllHandle);

  return(0);
}
```

For more information on the DLL functions, see *z/OS XL C/C++ Runtime Library Reference*.

Explicit use of a DLL in a COBOL/C application

The following example shows explicit use of a DLL in a COBOL/C application.

```
CBL  NODYNAM
      IDENTIFICATION DIVISION.
      PROGRAM-ID. 'COBOL1'.
      ENVIRONMENT DIVISION.
      CONFIGURATION SECTION.
      INPUT-OUTPUT SECTION.
      FILE-CONTROL.
      DATA DIVISION.
      FILE SECTION.
      WORKING-STORAGE SECTION.
      01 DLL-INFO.
          03 DLL-LOADMOD-NAME PIC X(12).
          03 DLL-PROGRAM-NAME PIC X(160).
          03 DLL-PROGRAM-HANDLE POINTER.
      77 DLL-RC               PIC S9(9) BINARY.
      77 DLL-PROGRAM-PTR      PROCEDURE-POINTER.

      77 DLL-STATUS           PIC X(1) VALUE 'N'.
          88 DLL-LOADED       VALUE 'Y'.
          88 DLL-NOT-LOADED   VALUE 'N'.
```

```
       PROCEDURE DIVISION.

           IF DLL-NOT-LOADED
           THEN
      *      Move the names in. They must be null terminated.
             MOVE Z'OOC05R' TO DLL-LOADMOD-NAME
             MOVE Z'ooc05r' TO DLL-PROGRAM-NAME

      *      Call the C routine to load the DLL and to get the
      *      function descriptor address.
             CALL 'A1CCDLGT' USING BY REFERENCE DLL-INFO
                                   BY REFERENCE DLL-RC
             IF DLL-RC = 0
             THEN
               SET DLL-LOADED TO TRUE
             ELSE
               DISPLAY 'A1CCLDGT failed with rc = '
                 DLL-RC
               MOVE 16 TO RETURN-CODE
               STOP RUN
             END-IF
           END-IF

      *    Move the function pointer to a procedure pointer
      *    so that we can use the call statement to call the
      *    program in the DLL.
           SET DLL-PROGRAM-PTR TO DLL-PROGRAM-HANDLE

      *    Call the program in the DLL.
           CALL DLL-PROGRAM-PTR

           GOBACK.
#include <stdio.h>
#include <dll.h>
#pragma linkage (A1CCDLGT,COBOL)

 typedef struct dll_lm {
   char         dll_loadmod_name[12];
   char         dll_func_name[160];
   void         (*fptr) (void); /* function pointer */
   } dll_lm;

 void A1CCDLGT (dll_lm *dll, int *rc)
 {
   dllhandle *handle;
   void (*fptr1)(void);
   *rc = 0;

   /* Load the DLL                                  */
   handle = dllload(dll->dll_loadmod_name);
   if (handle == NULL) {
      perror("A1CCDLGT failed on call to load DLL.\n");
      *rc = 1;
      return;
   }

   /* Get the address of the function              */
   fptr1 = (void (*)(void))
           dllqueryfn(handle,dll->dll_func_name);
   if (fptr1 == NULL) {
      perror("A1CCDLGT failed on retrieving function.\n");
      *rc = 2;
      return;
   }
```

```
  /* Return the function pointer                */
  dll->fptr = fptr1;
  return;
}
```

Managing the use of DLLs when running DLL applications

This topic describes how Language Environment manages loading, sharing and freeing DLLs when you run a DLL application.

Loading DLLs

When you load a DLL for the first time, either implicitly or via an explicit `dllload()` or `dlopen()`, writable static is initialized. If the DLL is written in C++ and contains static objects, then their constructors are run.

You can load DLLs from a z/OS UNIX file system as well as from conventional data sets. The following list specifies the order of a search for unambiguous and ambiguous file names.

- **Unambiguous file names**
  - If the file has an unambiguous z/OS UNIX name (it starts with a `./` or contains a `/`), the file is searched for only in the z/OS UNIX file system.
  - If the file has an unambiguous MVS name, and starts with two slashes (`//`), the file is only searched for in MVS.
- **Ambiguous file names**

  For ambiguous cases, the settings for `POSIX` are checked.
  - When specifying the `POSIX(ON)` runtime option, the runtime library attempts to load the DLL as follows:
    1. An attempt is made to load the DLL from the z/OS UNIX file system. This is done using the system service BPX1LOD. For more information on this service, see *z/OS UNIX System Services Programming: Assembler Callable Services Reference*.

       If the environment variable `LIBPATH` is set, each directory listed will be searched for the DLL. Otherwise the current directory will be searched for the DLL. Note that a search for the DLL in the z/OS UNIX file system is case-sensitive.
    2. If the DLL is found and contains an external link name of eight characters or less, the uppercase external link name is used to attempt a LOAD from the caller's MVS load library search order. If the DLL is not found or the external link name is more than eight characters, then the load fails.
    3. If the DLL is found and its sticky bit is on, any suffix is stripped off. Next, the name is converted to uppercase, and the base DLL name is used to attempt a LOAD from the caller's MVS load library search order. If the DLL is not found or the base DLL name is more than eight characters, the version of the DLL in the z/OS UNIX file system is loaded.
    4. If the DLL is found and does not fall into one of the previous two cases, a load from the z/OS UNIX file system is attempted.

    If the DLL could not be loaded from the z/OS UNIX file system because the file was not found or the application does not have sufficient authority to search for or read that file (that is, BPX1LOD fails with errnos ENOENT, ENOSYS, or EACCESS), then an attempt is made to load the DLL from the caller's MVS load library search order. For all other failures from BPX1LOD, the load of the DLL is terminated. For an implicit DLL load, the error is reported with the errno and errnojr displayed in message CEE3512S. For an

explicit DLL load, the dllload() service returns with the failing errno and errnojr values set. Correct the indicated error and rerun the application.

If the DLL could not be loaded from the z/OS UNIX file system, an attempt is made to load the DLL from the caller's MVS load library search order. This is done by calling the LOAD service with the DLL name, which must be eight characters or less (it will be converted to uppercase). LOAD searches for it in the following sequence:

1. Runtime library services (if active)
2. Job pack area (JPA)
3. TASKLIB
4. STEPLIB or JOBLIB. If both are allocated, the system searches STEPLIB and ignores JOBLIB.
5. LPA
6. Libraries in the linklist

For more information, see *z/OS MVS Initialization and Tuning Guide*

– When POSIX(OFF) is specified the sequence is reversed.
  - An attempt to load the DLL is made from the caller's MVS load library search order.
  - If the DLL could not be loaded from the caller's MVS load library then an attempt is made to load the DLL from the z/OS UNIX file system.

Recommendation: All DLLs used by an application should be referred to by unique names, whether ambiguous or not. Using multiple names for the same DLL (for example, aliases or symbolic links) might result in a decrease in DLL load performance. The use of symbolic links by themselves will not degrade performance, as long as the application refers to the DLL solely through the symbolic link name. To help ensure this, when building an application with implicit DLL references always use the same side deck for each DLL. Also, make sure that explicit DLL references with dllload() specify the same DLL name (case matters for loads).

Changing the search order for DLLs while the application is running (for example, changing LIBPATH) might result in errors if ambiguous file names are used.

Sharing DLLs

DLLs are shared at the enclave level (as defined by Language Environment). A referenced DLL is loaded only once per enclave and only one copy of the writable static is created or maintained per DLL per enclave. Thus, one copy of a DLL serves all modules in an enclave regardless of whether the DLL is loaded implicitly or explicitly. A copy is implicit through a reference to a function or variable. A copy is explicit through a DLL load. You can access the same DLL within an enclave both implicitly and by explicit runtime services.

All accesses to a variable in a DLL in an enclave refer to the single copy of that variable. All accesses to a function in a DLL in an enclave refer to the single copy of that function.

Although only one copy of a DLL is maintained per enclave, multiple logical loads are counted and used to determine when the DLL can be deleted. For a given DLL in a given enclave, there is one logical load for each explicit dllload() or dlopen() request. DLLs that are referenced implicitly may be logically loaded at application

initialization time if the application references any data exported by the DLL, or the logical load may occur during the first implicit call to a function exported by the DLL.

DLLs are not shared in a nested enclave environment. Only the enclave that loaded the DLL can access functions and variables.

Freeing DLLs

You can free explicitly loaded DLLs with a `dllfree()` or `dlclose()` request. This request is optional because the DLLs are automatically deleted by the runtime library when the enclave is terminated.

Implicitly loaded DLLs cannot be deleted from the DLL application code. They are deleted by the runtime library at enclave termination. Therefore, if a DLL has been both explicitly and implicitly loaded, the DLL can only be deleted by the runtime when the enclave is terminated.

Creating a DLL or a DLL application

Building a DLL or a DLL application is similar to creating a C, C++, COBOL or Enterprise PL/I application. It involves the following steps:

1. Writing your source code
2. Compiling your source code
3. Binding your object modules

For more information, see *z/OS XL C/C++ Programming Guide*, the appropriate version of the programming guide in the COBOL library at Enterprise COBOL for z/OS library (http://www-01.ibm.com/support/docview.wss?uid=swg27036733), or the IBM Enterprise PL/I for z/OS library (http://www.ibm.com/support/docview.wss?uid=swg27036735).

Building a simple DLL

This topic shows how to build a simple DLL. See "Building a simple DLL application" on page 60 for information about building a simple DLL application.

Writing DLL code

Writing your C DLL code

To build a simple C DLL, write code using the `#pragma export` directive to export specific external functions and variables as shown in Figure 19 on page 54.

```
#pragma export(bopen)
#pragma export(bclose)
#pragma export(bread)
#pragma export(bwrite)
int bopen(const char* file, const char* mode) {
  ...
}
int bclose(int) {
  ...
}
int bread(int bytes) {
  ...
}
int bwrite(int bytes) {
  ...
}
#pragma export(berror)
int berror;
char buffer[1024];
  ...
```

Figure 19. Using #pragma export to create a DLL executable module named BASICIO

For the previous example, the functions `bopen()`, `bclose()`, `bread()`, and `bwrite()` are exported; the variable `berror` is exported; and the variable `buffer` is not exported.

Note: To export **all** defined functions and variables with external linkage in the compilation unit to the users of the DLL, compile with the `EXPORTALL` compile option. All defined functions and variables with external linkage will be accessible from this DLL and by all users of this DLL. However, exporting all functions and variables has a performance penalty, especially when compiling with the C/C++ IPA option. When you use `EXPORTALL` you do not need to include `#pragma export` in your code.

Writing your C++ DLL code

To create a simple C++ DLL:

- Ensure that classes and class members are exported correctly, especially if they use templates.
- Use `_Export` or the `#pragma export` directive to export specific functions and variables.

  For example, to create a DLL executable module TRIANGLE, export the `getarea()` function, the `getperim()` function, the static member `objectCount` and the static constructor for `class triangle` using `#pragma export`:

```
class triangle : public area
{
   public:
      static int objectCount;
      getarea();
      getperim();
      triangle::triangle(void);
};
#pragma export(triangle::objectCount)
#pragma export(triangle::getarea())
#pragma export(triangle::getperim())
#pragma export(triangle::triangle(void))
```

Figure 20. Using #pragma export to create a DLL executable module TRIANGLE

- Do not inline the function if you apply the `_Export` keyword to the function declaration.

```
class triangle : public area
{
   public:
      static int _Export objectCount;
      double _Export getarea();
      double _Export getperim();
      _Export triangle::triangle(void);
};
```

Figure 21. Using _export to create DLL executable module TRIANGLE

- Always export static constructors and destructors when using the `_Export` keyword.
- Apply the `_Export` keyword to a class. This keyword automatically exports static members and defined functions of that class, constructors, and destructors.

  ```
  _class Export triangle
  {
     public:
        static int objectCount;
        double getarea();
        double getperim();
        triangle::triangle(void);
  };
  ```

- To export all external functions and variables in the compilation unit to the users of this DLL, you can also use the compiler option `EXPORTALL`. This compiler option is described in *z/OS XL C/C++ User's Guide*, and `#pragma export` directives are described in detail in *z/OS XL C/C++ Language Reference*. If you use the `EXPORTALL` option, you do not need to include `#pragma export` or `_Export` in your code.

Writing your COBOL DLL code

There are no special DLL conditions for writing your COBOL code.

Writing your Enterprise PL/I DLL code

Any PL/I routine other than an OPTIONS(MAIN) procedure can go into a DLL. A package containing a MAIN procedure cannot go into a DLL. Only those external variables that have the RESERVED attribute are exported from a package.

Writing your Language Environment-conforming assembler DLL code

To build a simple assembler DLL, your assembler routine must conform to Language Environment conventions. To do this, begin by using the Language Environment macros CEEENTRY and CEETERM. The EXPORT= keyword parameter on the CEEENTRY macro allows you to identify specific assembler entry points for export. The CEEPDDA macro allows you to define data in your assembler routine that can be exported. Details on all Language Environment assembler macros are in “Assembler macros” on page 448.

Figure 22 on page 57 shows how to use Language Environment macros to create an Assembler DLL. The CEEENTRY prolog macro has EXPORT=YES specified to mark this entry point exported. In this particular case we want the exported function known externally in lower case, so the CEEENTRY is followed by an assembler ALIAS statement. The ALIAS can be used to "name" the exported function with a mixed-case name up to 256 characters long. This assembler DLL also has two exported variables, "DllVar" (initial value = 123) and "DllStr" (initial value is the C string "Hello World"). When the exported function "dllfunc" is called, it sets "DllVar" to 456 and truncates the "DllStr" C string to "Hello".

```
DLLFUNC  CEEENTRY MAIN=NO,PPA=DLLPPA,EXPORT=YES
DLLFUNC  ALIAS C'dllfunc'
*        Symbolic Register Definitions and Usage
R8       EQU   8             Work register
R9       EQU   9             Work register
R15      EQU   15            Entry point address
*
         WTO   'ADLLBEV2: Exported function dllfunc entered',ROUTCDE=11
*
         WTO   'ADLLBEV2: Setting DllVar to 456',ROUTCDE=11
*
         CEEPLDA DllVar,REG=9
         LA    R8,456
         ST    R8,0(R9)
*
         WTO   'ADLLBEV2: Truncating exported string to "Hello"',      X
               ROUTCDE=11
*
         CEEPLDA DllStr,REG=9
         LA    R8,0
         STC   R8,5(R9)
*
         WTO   'ADLLBEV2: Done.',ROUTCDE=11
*
         SR    R15,R15
RETURN   DS   0H
         CEETERM  RC=(R15),MODIFIER=0
*
         CEEPDDA DllVar,SCOPE=EXPORT
         DC      A(123)
         CEEPDDA END
         CEEPDDA DllStr,SCOPE=EXPORT
         DC      C'Hello World'
         DC      X'00'
         CEEPDDA END
*
DLLPPA   CEEPPA
         CEEDSA
         CEECAA
         END      DLLFUNC
```

Figure 22. Using Language Environment macros to create an assembler DLL executable named ADLLBEV2

Compiling your DLL code

For C source, compile with the DLL compiler option. When you specify the DLL compiler option, the compiler generates special code when calling functions and referencing external variables. Even if a simple application or DLL does not reference any imported functions or imported variables from other DLLs, you should specify the DLL compiler option. Compiling an application or DLL as DLL code eliminates the potential compatibility problems that may occur when binding DLL code with non-DLL code.

Compiling your C source with the XPLINK compiler option will automatic generate DLL-enabled code, so in this case the DLL compiler option is not necessary.

For C++ source, compile as you would any C++ program.

For COBOL source code that defines DLLs, compile with the RENT, DLL and EXPORTALL compiler options. For source code that only references DLLs, compile with the RENT, DLL, and NOEXPORTALL compiler options.

For Enterprise PL/I source, you must compile with the RENT option.

For Assembler source, you must use the GOFF option.

Note: DLLs must be reentrant; you should use the RENT C compiler option. (C++ is always reentrant).

Binding your DLL code

Use the DLL support in the DFSMS binder, rather than the linkage editor, for linking DLL applications. Note that binder-based DLLs must reside in PDSEs, rather than PDS data sets. If a DLL must reside in a PDS load library, the application must be prelinked with the Language Environment prelinker before standard linkage editing. See Appendix A, "Prelinking an application," on page 539 for further details. When binding a DLL application using the DFSMS binder, the following binder externals are used:

- The binder option CASE(MIXED) is required when binding DLLs that use mixed-case exported names.
- The binder options RENT, DYNAM(DLL), and COMPAT(PM3) or COMPAT(CURRENT) are required.
- When binding a DLL, a SYSDEFSD DD statement must be specified, indicating the data set where the binder should create a DLL definition side-deck. The DLL definition side-deck contains IMPORT control statements for each of the symbols exported by a DLL. If you are using z/OS UNIX, specify the following option for the bind step for `c89` or the `c++` command:

  ```
  -W l,DLL
  ```

  If the code in the DLL was compiled with the XPLINK compiler option, specify:

  ```
  -W l,DLL,XPLINK
  ```
- The binder SYSLIN input, the binding code that references DLL code, must include the DLL definition side-decks for the DLLs that are to be dynamically referenced from the module being bound. See *z/OS MVS Program Management: User's Guide and Reference* and *z/OS MVS Program Management: Advanced Facilities* for further details.

Binding C

When binding the C object module as shown in Figure 19 on page 54, the binder generates the following definition side-deck:

```
IMPORT CODE 'BASICIO'   bopen
IMPORT CODE ,BASICIO,   bclose
IMPORT CODE ,BASICIO,   bread
IMPORT CODE ,BASICIO,   bwrite
IMPORT DATA ,BASICIO,   berror
```

You can edit the definition side-deck to remove any functions or variables that you do not want to export. For instance, in the above example, if you do not want to expose `berror`, remove the control statement `IMPORT DATA ,BASICIO, berror` from the definition side-deck.

Note:

1. You should also provide a header file containing the prototypes for exported functions and external variable declarations for exported variables.
2. Side-decks are created without newline characters, therefore you cannot edit them with an editor that expects newline characters, such as `vi` in z/OS UNIX.

For more information on binding C, see *z/OS XL C/C++ User's Guide*.

Binding C++

When binding the C++ object modules shown in Figure 20 on page 55, the binder generates the following definition side-deck.

```
IMPORT CODE ,TRIANGLE, getarea__8triangleFv
IMPORT CODE ,TRIANGLE, getperim__8triangleFv
IMPORT CODE ,TRIANGLE, __ct__8triangleFv
```

You can edit the definition side-deck to remove any functions and variables that you do not want to export. In the above example, if you do not want to expose `getperim()`, remove the control statement `IMPORT CODE ,TRIANGLE, getperim__8triangleFv` from the definition side-deck.

Note:

1. Removing functions and variables from the definition side-deck does not minimize the performance impact caused by specifying the EXPORTALL compiler option.
2. Side-decks are created without newline characters, therefore you cannot edit them with an editor that expects newline characters, such as `vi` in z/OS UNIX.

The definition side-deck contains mangled names, such as `getarea__8triangleFv`. To find the original function or variable name in your source module, review the compiler listing created or use the `CXXFILT` utility. This will permit you to see both the mangled and demangled names. For more information on the `CXXFILT` utility, and on binding C++, see *z/OS XL C/C++ User's Guide*.

Binding COBOL

When binding a module that contains COBOL programs compiled with the DLL and EXPORTALL compiler options, the binder generates a definition side-deck. If there are programs in the module that you do not want to make available with DLL linkage, you can edit the definition side-deck to remove programs that you do not want to export.

Binding Enterprise PL/I

The considerations for binding Enterprise PL/I are the same as for binding C++ in"Binding C++."

Binding Assembler

When binding the Assembler object module as shown in Figure 22 on page 57, the binder generates the following definition side-deck:

```
 IMPORT CODE,'ADLLBEV2','dllfunc'
 IMPORT DATA,'ADLLBEV2','DllStr'
 IMPORT DATA,'ADLLBEV2','DllVar'
```

The Assembler DLL support requires use of the binder.

Building a simple DLL application

A simple DLL application contains object modules that are made up of only DLL-code. The application may consist of multiple source modules. Some of the source modules may contain references to imported functions, imported variables, or both.

It is not necessary for DLL applications to be reentrant. However, for some compilers it is necessary to compile code that references DLLs with the RENT option in order to provide support for the DLL call mechanism.

To use a load-on-call DLL in your simple DLL application, perform the following steps:

- Writing your DLL application code

  Write your code as you would if the functions were statically bound. Assembler code that will access imported functions and imported variables must use the Language Environment macros.
- Compiling your DLL application code
  - Compile your C source files with the following compiler options:
    - `DLL` (not necessary if the XPLINK compiler option is specified)
    - `RENT`
    - `LONGNAME`

    These options instruct the compiler to generate special code when calling functions and referencing external variables.
  - Compile your C++ source files normally. A C++ application is always DLL code.
  - Compile your COBOL source files with the following compiler options:
    - DLL
    - RENT
    - NOEXPORTALL
  - Compile your Enterprise PL/I source files with the `RENT` option.
  - Assembler DLL Application source files must be assembled using the `GOFF` option.
- Binding your DLL application code
  - The binder option CASE(MIXED) is required when binding DLLs applications that use mixed-case exported names.
  - The binder options RENT, DYNAM(DLL), and COMPAT(PM3) or COMPAT(CURRENT) are required.

  Include the definition side-deck from the DLL provider in the set of object modules to bind. The binder uses the definition side-deck to resolve references to functions and variables defined in the DLL. If you are referencing multiple DLLs, you must include multiple definition side decks.

  Note: Because definition side decks in automatic library call (autocall) processing will not be resolved, you must use the `INCLUDE` statement.

After final autocall processing of `DD SYSLIB` is complete, all DLL-type references that are not statically resolved are compared to `IMPORT` control statements. Symbols on `IMPORT` control statements are treated as definitions, and cause a matching unresolved symbol to be considered dynamically rather than statically resolved. A

dynamically resolved symbol causes an entry in the binder B_IMPEXP to be created. If the symbol is unresolved at the end of DLL processing, it is not accessible at run time.

Addresses of statically bound symbols are known at application load time, but addresses of dynamically bound symbols are not. Instead, the runtime library that loads the DLL that exports those symbols finds their addresses at application run time. The runtime library also fixes up the importer's linkage blocks (descriptors) in C_WSA during program execution.

The following code fragment illustrates how a C++ application can use the TRIANGLE DLL described in"Writing your C++ DLL code" on page 54. Compile normally and bind with the definition side-deck provided with the TRIANGLE DLL.

```
extern int getarea(); /* function prototype */
main() {
      ...
      getarea();      /* imported function reference */
      ...
}
```

The following COBOL code sample illustrates how a simple COBOL-only DLL application (A1C4DL01) calls a COBOL DLL (A1C4DL02):

```
CBL PGMNAME(LONGMIXED),DLL,RENT
IDENTIFICATION DIVISION.
PROGRAM-ID. 'A1C4DL01'.
ENVIRONMENT DIVISION.
CONFIGURATION SECTION.
INPUT-OUTPUT SECTION.
FILE-CONTROL.
DATA DIVISION.
FILE SECTION.
WORKING-STORAGE SECTION.
01 TODAYS-DATE-YYYYMMDD         PIC 9(8).
PROCEDURE DIVISION.
    Display 'A1C4DL01: Entered'
    MOVE FUNCTION CURRENT-DATE(1:8) TO TODAYS-DATE-YYYYMMDD
    Call 'A1C4DL02' using todays-date-yyyymmdd
    Display 'A1C4DL01: All done'
    GOBACK
    .

CBL PGMNAME(LONGMIXED),DLL,EXPORTALL,RENT
IDENTIFICATION DIVISION.
PROGRAM-ID. 'A1C4DL02'.
ENVIRONMENT DIVISION.
CONFIGURATION SECTION.
INPUT-OUTPUT SECTION.
FILE-CONTROL.
DATA DIVISION.
FILE SECTION.
WORKING-STORAGE SECTION.
LINKAGE SECTION.
01 TODAYS-DATE-YYYYMMDD         PIC 9(8).
PROCEDURE DIVISION using todays-date-yyyymmdd.
    Display 'A1C4DL02: Todays date is ' todays-date-yyyymmdd
    GOBACK
    .
```

Figure 23. COBOL DLL application calling a COBOL DLL

The following code fragment illustrates how an Assembler routine can use the ADLLBEV2 DLL described in "Writing your Language Environment-conforming assembler DLL code" on page 56. Assemble and bind with the definition side-deck provided with the ADLLBEV2 DLL.

```
DLLAPPL  CEEENTRY MAIN=YES,PPA=DLLPPA
*        Symbolic Register Definitions and Usage
R8       EQU   8             Work register
R9       EQU   9             Work register
R15      EQU   15            Entry point address
*
         WTO   'ADLABIV4: Calling imported function dllfunc',ROUTCDE=11
*
         CEEPCALL dllfunc,MF=(E,)
*
         WTO   'ADLABIV4: Getting address of imported var DllVar',     X
               ROUTCDE=11
*
         CEEPLDA DllVar,REG=9
*
* Set value of imported variable to 789
*
         LA    R8,789
         ST    R8,0(,R9)
*
         WTO   'ADLABIV4: Done.',ROUTCDE=11
*
         SR    R15,R15
RETURN   DS   0H
         CEETERM  RC=(R15),MODIFIER=0
*
*
         CEEPDDA DllVar,SCOPE=IMPORT
DLLPPA   CEEPPA
         LTORG
         CEEDSA
         CEECAA
         END      DLLAPPL
```

Figure 24. Assembler DLL application calling an assembler DLL

See Figure 25 on page 64 for a summary of the processing steps required for the application and related DLLs.

Creating and using DLLs

Figure 25 on page 64 summarizes the use of DLLs for both the DLL provider and for the writer of applications that use them. In this example, application ABC is referencing functions and variables from two DLLs, XYZ and PQR. The connection between DLL preparation and application preparation is shown. Each DLL shown contains a single compilation unit. The same general scheme applies for DLLs composed of multiple compilation units, except that they have multiple compilers and a single bind for each DLL. For simplicity, this example assumes that ABC does not export variables or functions and that XYZ and PQR do not use other DLLs.

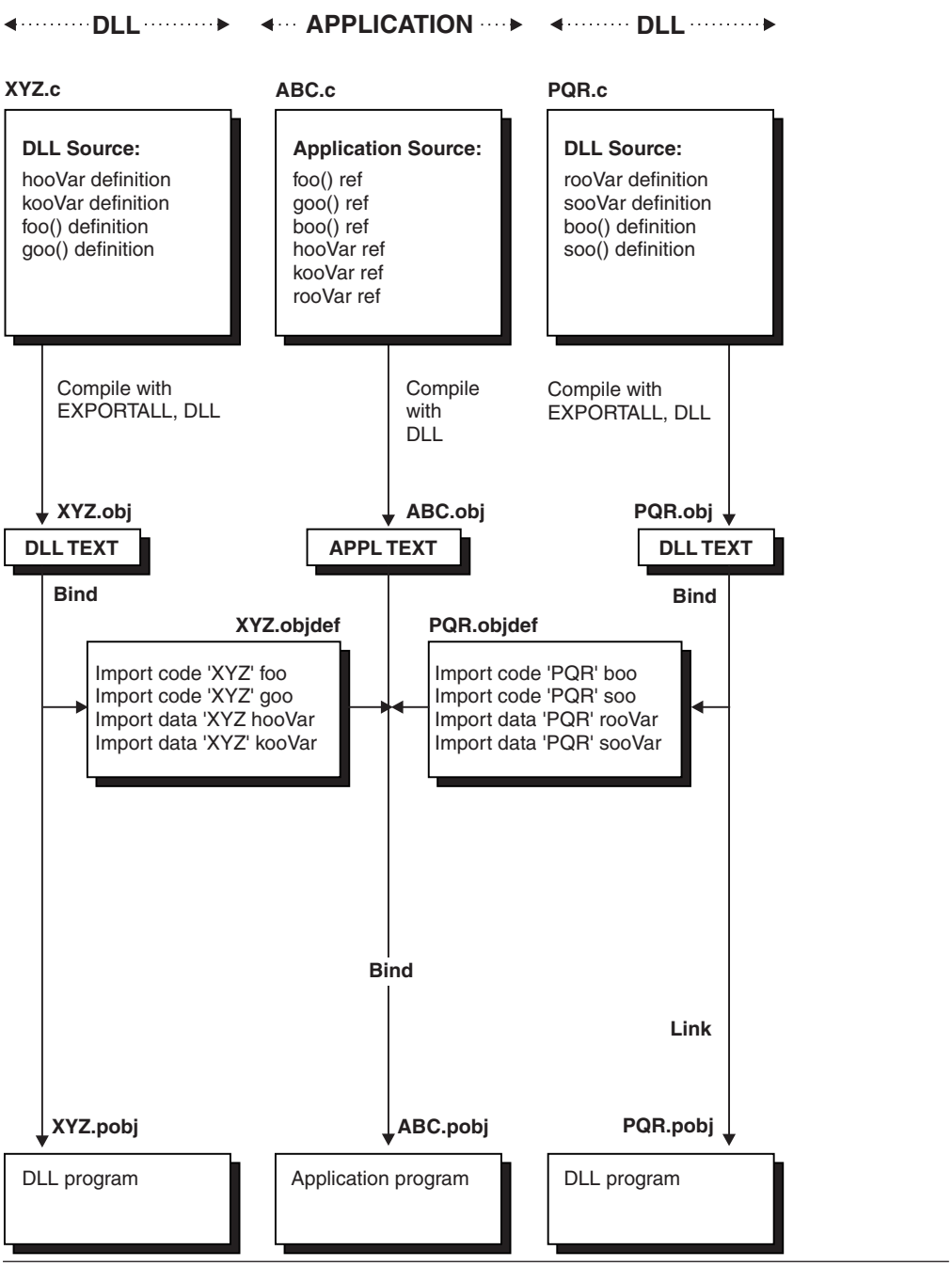

Figure 25. Summary of DLL and DLL application preparation and usage

DLL restrictions

Consider the following restrictions when creating DLLs and DLL applications:

- The entry point for a DLL must be in a program compiled with a Language Environment-conforming compiler that includes DLL support capability. Otherwise, Language Environment issues an error and terminates the application.

- DLLs must be REENTRANT. Be sure to specify the `RENT` option when you bind your code. Unpredictable results will occur if you link-edit a DLL as NORENT. One possible symptom you may see that indicates the DLL was link-edited as NORENT is more than one writable static area for the same DLL.
- In a C/C++ DLL application that contains `main()`, `main()` cannot be exported.
- The AMODE of a DLL application must be the same as the AMODE of the DLL that it calls.
- DLL facilities are not available:
  - Under MTF, CSP or SP C
  - To application programs with `main()` written in PL/I that dynamically call C functions. (This restriction does not apply to Enterprise PL/I.)
- In C++ applications, you cannot implicitly or explicitly perform a physical load of a DLL while running static destructors. However, a logical load of a DLL (meaning that the DLL has previously been loaded into the enclave) is allowed from a static destructor. In this case, references from the load module containing the static destructor to the previously-loaded DLL are resolved.
- You cannot use the C functions `set_new_handler()` or `set_unexpected()` in a DLL if the DLL application is expected to invoke the new handler or unexpected function routines.
- If a fetched C module is compiled as a DLL, it can import variables and functions from the other DLL modules, but it cannot export variables or functions.
- A COBOL dynamic call cannot be made to a load module that is a DLL.
- A COBOL dynamic call cannot be made to a COBOL for OS/390 & VM program that is compiled with the DLL compiler option.
- COBOL data declared with the EXTERNAL attribute are independent of DLL support; these data items are managed by the COBOL runtime environment and are accessible by name from any COBOL program in the run-unit that declares them, regardless of whether the programs are in DLLs or not.

  In particular, the facilities for exporting and importing external variables from DLLs implemented in C/C++ do not apply to COBOL external data.
- When using the explicit C DLL functions in a multithreaded environment, avoid any situation where one thread frees a DLL while another thread calls any of the DLL functions. For example, this situation occurs when a `main()` function uses `dllload()` or `dlopen()` to load a DLL, and then creates a thread that uses the `ftw()` function. The `ftw()` target function routine is in the DLL. If the `main()` function uses `dllfree()` or `dlclose()` to free the DLL, but the created thread uses `ftw()` at any point, you will get an abend.

  To avoid a situation where one thread frees a DLL while another thread calls a DLL function, do either of the following:
  - Do not free any DLLs by using `dllfree()` or `dlclose()` (Language Environment will free them when the enclave is terminated).
  - Have the `main()` function call `dllfree()` or `dlclose()` only after all threads have been terminated.
- For C/C++ DLLs to be processed by `IPA`, they must contain at least one function or method. Data-only DLLs will result in a compilation error.
- The use of circular C++ DLLs may result in unpredictable behavior related to the initialization of non-local static objects. For example, if a static constructor (being run as part of loading DLL "A") causes another DLL "B" to be loaded, then DLL "B" (or any other DLLs that "B" causes to be loaded before static constructors for DLL "A" have completed) cannot expect non-local static objects

in "A" to be initialized (that is what static constructors do). You should ensure that non-local static objects are initialized before they are used, by coding techniques such as counters or by placing the static objects inside functions.

Improving performance

This topic contains some hints on using DLLs efficiently. Effective use of DLLs may improve the performance of your application.

- If you are using a particular DLL frequently across multiple address spaces, the DLL can be installed in the LPA or ELPA. When the DLL resides in a PDSE, the dynamic LPA services should be used. Installing in the LPA/ELPA may give you the performance benefits of a single rather than multiple load of the DLL.
- Group external variables into one external structure.
- When using z/OS UNIX avoid unnecessary load attempts.

  Language Environment supports loading a DLL residing in the z/OS UNIX file system or a data set. However, the location from which it tries to load the DLL first varies depending whether your application runs with the runtime option `POSIX(ON)` or `POSIX(OFF)`.

  If your application runs with `POSIX(ON)`, Language Environment tries to load the DLL from the z/OS UNIX file system first. If your DLL is a data set member, you can avoid searching the directories. To direct a DLL search to a data set, prefix the DLL name with two slashes (//) as is in the following example:

  ```
  //MYDLL
  ```

  If your application runs with `POSIX(OFF)`, Language Environment tries to load your DLL from a data set. If your DLL is a z/OS UNIX file, you can avoid searching a data set. To direct a DLL search to the z/OS UNIX file system, prefix the DLL name with a period and slash (./) as is done in the following example.

  ```
  ./mydll
  ```

  Note: DLL names are case sensitive in the z/OS UNIX file system. If you specify the wrong case for your DLL that resides in the z/OS UNIX file system, it will not be found.
- For C/C++ IPA, you should only export subprograms (functions and C++ methods) or variables that you need for the interface to the final DLL. If you export subprograms or variables unnecessarily (for example, by using the `EXPORTALL` option), you severely limit IPA optimization. In this case, global variable coalescing and pruning of unreachable or 100% inlined code does not occur. To be processed by IPA, DLLs must contain at least one subprogram. Attempts to process a data-only DLL will result in a compilation error.
- The suboption NOCALLBACKANY of the C compiler option DLL is more efficient than the CALLBACKANY suboption. The CALLBACKANY option calls a Language Environment routine at runtime. This runtime service enables direct function calls. Direct function calls are function calls through function pointers that point to actual function entry points rather than function descriptors. The use of CALLBACKANY will result in extra overhead at every occurrence of a call through a function pointer. This is unnecessary if the calls are not direct function calls.

Building complex DLLs

Before you attempt to build complex DLLs it is important to understand the differences between the terms DLL, DLL code, and DLL application, as described in “DLL concepts and terms” on page 44.

Note that not all source files that make up a DLL application have to be compiled with the DLL option. However, source files that reference exported functions and exported global variables must be compiled with the DLL option.

A key characteristic of a complex DLL or DLL application is that linking DLL code with non-DLL code creates it. The following are reasons you might compile your code as non-DLL:

1. Source modules do not use C or C++.
2. To prevent problems which occur when a non-DLL function pointer call uses DLL code. This problem takes place when a function makes a call through a function pointer that points to a function entry rather than a function descriptor.

For more information on building complex DLLs, see *z/OS XL C/C++ Programming Guide*.

Chapter 5. Link-editing, loading, and running under batch

You process an application under batch by submitting batch jobs to the operating system. A job might consist of one or more of the following job steps:
- Compiling a program
- Link-editing an application
- Running an application

Note: The terms in this topic having to do with linking (*bind, binding, link, link-edit*, and so forth) refer to the process of creating an executable program from object modules (the output produced by compilers and assemblers). The program used is the DFSMS program management binder. The binder extends the services of the linkage editor and is the default program provided for creating an executable. For linkage editor-specific information, see *z/OS MVS Program Management: User's Guide and Reference* and *z/OS MVS Program Management: Advanced Facilities*.

IBM-supplied cataloged procedures allow you to compile, link-edit or load, and run an application without supplying all the job control language (JCL) required for a job step. For information about cataloged procedures, see Chapter 8, "Using IBM-supplied cataloged procedures," on page 103. If the statements in the cataloged procedures do not match your requirements exactly, you can modify them or add new statements for the duration of a job.

The following section provides an overview of link-editing, loading, and running Language Environment-conforming applications under batch. For detailed information about link-editing, see *z/OS MVS Program Management: User's Guide and Reference* and *z/OS MVS Program Management: Advanced Facilities*. For information about the Language Environment prelinker, see Appendix A, "Prelinking an application," on page 539.

Several Fortran and C library routines have identical names. If your application contains any Fortran or assembler routine that uses a Fortran library routine, see "Resolving library module name conflicts between Fortran and C" on page 17 to resolve any potential name conflicts.

TSO/E has its own section on link-editing, loading, and running (see Chapter 6, "Creating and executing programs under TSO/E," on page 83).

z/OS UNIX has its own section on link-editing, loading, and running C applications (see Chapter 7, "Creating and executing programs using z/OS UNIX System Services," on page 93).

Basic link-editing and running under batch

This topic describes how to accept and to override the default Language Environment runtime options under MVS.

Accepting the default runtime options

To run an existing object module under batch and accept all of the default Language Environment runtime options, use the following sample JOB with the Language Environment-provided link-edit and run cataloged procedure CEEWLG (see "CEEWLG — Link and run a Language Environment conforming

© Copyright IBM Corp. 1991, 2015

non-XPLINK program" on page 109 for more information). The CEEWLG procedure identifies the Language Environment libraries that your object module needs to link-edit and run; you do not need to explicitly identify these in your JCL.

There is also a cataloged procedure, CEEXLR, for XPLINK. See "CEEXLR — Link and run a Language Environment conforming XPLINK program" on page 111.

```
//CEEWLG JOB
//*
//LINKGO     EXEC CEEWLG
//LKED.SYSIN DD DSN='userid.MYLIB.OBJLIB(MYPROG)',...DISP=SHR
//*
```

Figure 26. Accepting the default runtime options under batch

Overriding the default runtime options

In Figure 27, an object module called MYPROG is created and run using the cataloged procedure CEEWLG. The code in the example overrides the Language Environment defaults for the RPTOPTS and MSGFILE runtime options.

```
//CEEWLG  JOB
//*
//LINKGO     EXEC CEEWLG,
//    PARM.GO='RPTOPTS(ON),MSGFILE(OPTRPRT)/'
//*
//LKED.SYSIN   DD DSN='userid.MYLIB.OBJLIB(MYPROG)',...DISP=SHR
//GO.OPTRPRT   DD SYSOUT=A
//*
```

Figure 27. Overriding the default runtime options under batch

The trailing slash after the runtime options is required for C, Fortran, PL/I and for COBOL users who have specified the CBLOPTS(OFF) runtime option. For COBOL users who have specified the CBLOPTS(ON) runtime option at installation (see *z/OS Language Environment Programming Reference*), the slash should go before the runtime options, as in Figure 28.

```
⋮
//    PARM.GO='/RPTOPTS(ON),MSGFILE(OPTRPRT)'
⋮
```

Figure 28. Overriding the default runtime options for COBOL

Specifying runtime options with the CEEOPTS DD card

Language Environment supports the ability to provide additional runtime options through a DD card. The name of the DD must be CEEOPTS. The DD must be available during initialization of the "enclave" so that the options can be merged.

In the Language Environment Runtime Options report, when an option was last set in the CEEOPTS DD card, DD:CEEOPTS will be used in the "LAST WHERE SET" column.

The CEEOPTS DD is ignored under CICS, SPC, and for programs invoked using one of the exec family of functions.

The general form for specifying runtime options with the CEEOPTS DD card is:

```
//CEEWLG JOB
//*
//LINKGO EXEC CEEWLG
//LKED.SYSIN DD DSN='userid.MYLIB.OBJLIB(MYPROG)',...DISP=SHR
//GO.OPTRPRT DD SYSOUT=A
//GO.CEEOPTS DD *
RPTOPTS(ON),MSGFILE(OPTRPRT)
//*
```

Specifying runtime options in the EXEC statement

If the first program in your application is Language Environment-conforming or was compiled by a pre-Language Environment compiler supported by Language Environment, you can pass runtime options by using the PARM= parameter in your JCL. The general form for specifying runtime options in the PARM parameter of the EXEC statement is:

```
//[stepname] EXEC PGM=program_name,
//           PARM='[runtime options/][program parameters]'
```

For example, if you want to generate a storage report and runtime options report for program PROGRAM1, specify the following:

```
//GO1   EXEC PGM=PROGRAM1,PARM='RPTSTG(ON),RPTOPTS(ON)/'
```

The runtime options that are passed to the main routine must be followed by a slash (/) to separate them from program parameters. For HLL considerations to keep in mind when specifying runtime options, see “Specifying runtime options and program arguments” on page 123. The EXECOPS option for C and C++ is used to specify that runtime options passed as parameters at execution time are to be processed by Language Environment. The option NOEXECOPS specifies that runtime options are not to be processed from execution parameters and are to be treated as program parameters.

For z/OS XL C/C++, a user can specify either EXECOPS or NOEXECOPS in a `#pragma runopts` directive or as a compiler option. EXECOPS is the default for z/OS XL C/C++. When EXECOPS is in effect, you can pass runtime options in the EXEC statement in your JCL.

For Enterprise PL/I for z/OS and PL/I for MVS & VM, runtime options can be passed in your JCL if a PROCEDURE statement includes the OPTIONS(MAIN) clause. If the PROCEDURE statement specifies OPTIONS(MAIN NOEXECOPS), then runtime options cannot be passed in your JCL. Note that no PL/I compiler has an NOEXECOPS or EXECOPS compiler option, but they have the equivalent function by the specification of NOEXECOPS along with OPTIONS(MAIN).

Providing link-edit input

Input to the link-edit process can be:

- One or more object modules
- Control statements for the link-edit process
- Previously link-edited executable programs you want to combine into a single executable module
- A DLL side-deck if your application implicitly references DLL functions or data

Figure 29 shows the basic batch link-edit process for your application.

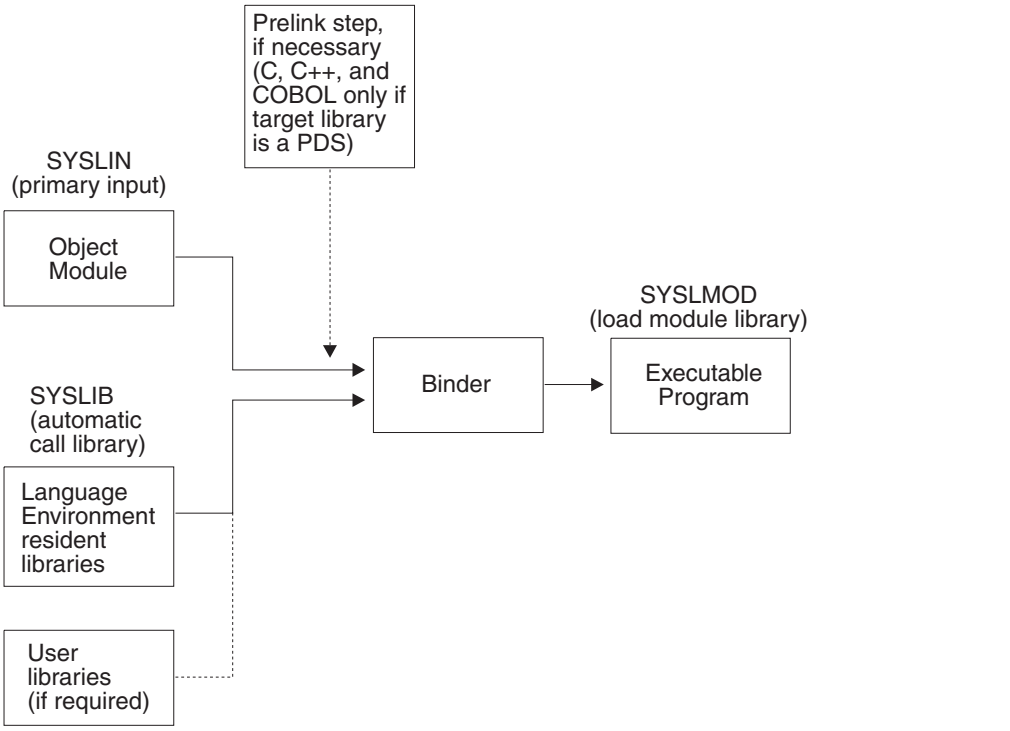

Figure 29. Basic batch link-edit processing

Writing JCL for the link-edit process

You can use cataloged procedures rather than supply all the JCL required for a job step. You can use JCL statements to override the statements of the cataloged procedure to tailor the information provided by the link-edit process.

For a description of the IBM-supplied cataloged procedures that include a link-edit step, see Table 15 on page 105.

- Invoking with the EXEC statement.

  Use the EXEC job control statement in your JCL to invoke the binder. The EXEC statement is:

  ```
  //LKED EXEC PGM=HEWL
  ```

- Using the PARM parameter.

  Use the PARM parameter of the EXEC job control statement to select one or more of the optional facilities provided by the binder. For example, if you want a mapping of the executable program produced by the link-edit process, specify:

  ```
  //LKED EXEC PGM=HEWL,PARM='MAP'
  ```

- Required DD statements.

  The link-edit process requires three standard data sets. You must define these data sets in DD statements with the ddnames SYSLIN, SYSLMOD, and SYSPRINT. If the linkage editor is being used then an additional data set must be defined with ddname SYSUT1. The required data sets and their characteristics are shown in Table 8 on page 73.

Table 8. Required data sets used for link-editing

ddname	Type	Function
SYSLIN	Input	Primary input to the link-edit process consists of a sequential data set, members from a PDS or PDSE, or an in-stream data set. The primary input must be composed of one or more separately compiled object modules or link-edit control statements. An executable program cannot be part of the primary input, although it can be introduced by the INCLUDE control statement (see "Using the INCLUDE statement" on page 76).
SYSLMOD	Output	The data set where output (executable program) from the link-edit process is stored.
SYSPRINT	Output	SYSPRINT defines the location for the listing that includes reference tables for the executable program. Output from the link-edit process: • Diagnostic messages • Informational messages • Module map • Cross-reference list
SYSUT1	Utility	A data set used by the linkage editor as a temporary workspace (the data set must be on a direct access device). This data set is not required for the binder.

- Optional DD statements.

  If you want to use the automatic call library, you must define a data set using a DD statement with the name SYSLIB. You can also specify additional data sets containing object modules and executable programs as additional input to the link-edit process. These data set names and their characteristics are shown in Table 9 on page 74.

Table 9. Optional data sets used for link-editing

ddname	Type	Function
SYSLIB[1]	Library	Secondary input to the linkage editor consists of object modules or load modules that are included in the executable program from the automatic call library. The automatic call library contains load modules or object modules that are used as secondary input to the linkage editor to resolve external symbols left undefined after all the primary input has been processed. The automatic call library can include: • Libraries that contain object modules, with or without linkage editor control statements • Libraries that contain executable programs • The libraries that contain the Language Environment resident routines, such as SCEELKED, SCEELKEX, SCEEOBJ, and SCEECPP (for a description of these data sets see "Planning to link-edit and run" on page 8). SYSLIB is input to the linkage editor only if the CALL=NO link-edit option is not in effect (see Table 10 on page 77, in *z/OS MVS Program Management: User's Guide and Reference* and *z/OS MVS Program Management: Advanced Facilities* , or in *z/OS TSO/E Command Reference* for more information). You can also identify secondary input to the linkage editor with the INCLUDE statement. A routine compiled with a Language Environment-conforming compiler cannot be executed until the appropriate Language Environment resident routines have been linked into the executable program. The Language Environment resident routines are contained in the SCEELKED library; the data set name could be CEE.SCEELKED. If you are unsure where SCEELKED has been installed at your location, contact your system administrator. This data set must be specified in the SYSLIB statement in your JCL. In the following example, the SYSLIB DD statement is written so that Language Environment resident library routines are included as secondary input into your executable program: `//SYSLIB DD DSNAME=CEE.SCEELKED,DISP=SHR`
User-specified[2]	Input	You can use ddnames to get additional executable programs and object modules.

Notes:
[1] Required for library runtime routines
[2] Optional data set

- Examples of link-edit JCL.

  A typical sequence of job control statements for link-editing an object module (compiled NOXPLINK) into an executable program is shown in Figure 30 on page 75. The NAME linkage editor control statement in the figure puts PROGRAM1 in USER.LOADLIB with the member name PROGRAM1.

```
//LKED     EXEC  PGM=HEWL,PARM='MAP'
//SYSPRINT DD    SYSOUT=A
//SYSLMOD  DD    DSNAME=USER.LOADLIB,UNIT=SYSDA,
//             DISP=(NEW,KEEP),SPACE=(CYL,(10,10,1))
//SYSLIB   DD    DSNAME=CEE.SCEELKED,DISP=SHR
//SYSLIN   DD    DSNAME=USER.OBJLIB(PROGRAM1),DISP=SHR
//         DD    DDNAME=SYSIN
//SYSIN    DD    *
     NAME  PROGRAM1(R)
/*
```

Figure 30. Creating a non-XPLINK executable program under batch

A similar sequence of job control statements for link-editing an XPLINK object module is shown in Figure 31.

```
//LKEDX    EXEC PGM=IEWL,REGION=20M,
//         PARM='AMODE=31,RENT,DYNAM=DLL,CASE=MIXED,MAP,LIST=NOIMP'
//SYSPRINT DD   SYSOUT=*
//SYSLMOD  DD   DSNAME=USER.PDSELIB,UNIT=SYSALLDA,
//         DISP=(NEW,KEEP),SPACE=(TRK,(7,7,1)),DSNTYPE=LIBRARY
//SYSLIB   DD   DSNAME=CEE.SCEEBND2,DISP=SHR
//SYSLIN   DD   DSNAME=USER.OBJLIB(PROGRAM1),DISP=SHR
//         DD   DSNAME=CEE.SCEELIB(CELHS003),DISP=SHR
//         DD   DSNAME=CEE.SCEELIB(CELHS001),DISP=SHR
//SYSDEFSD DD   DUMMY
//SYSIN    DD   *
     NAME  PROGRAM1(R)
/*
```

Figure 31. Creating an XPLINK executable program under batch

- Adding members to a library.

  The output from the binder is usually placed in a private program library.

  The automatic call library that is used as input to the binder can be a Language Environment library (for example, SCEELKED/SCEELKEX for non-XPLINK applications, and SCEEBND2 for XPLINK applications), a compiler library, a private program library, or a subroutine library.

  When you are adding a member to a library, you must specify the member name as follows:

  – When a single module is produced as output from the linkage editor, the member name can be specified as part of the data set name in the SYSLMOD.
  – When more than one module is produced as output from the linkage editor, the member name for each module must be specified in the NAME option or the NAME control statement. The member name cannot be specified as part of the data set name.

- Link-editing multiple object modules.

  When an Enterprise PL/I for z/OS or PL/I for MVS & VM main procedure is link-edited with other object modules produced by the Enterprise PL/I for z/OS or the PL/I for MVS & VM compilers, the entry point of the resulting executable program is resolved to the external symbol CEESTART. This happens automatically because the CEESTART CSECT is generated first in the object module and is specified in the END statement of the object module. Runtime errors occur if the executable program entry point is forced to some other symbol by use of the linkage editor ENTRY control statement.

If an Enterprise PL/I for z/OS or PL/I for MVS & VM main procedure is link-edited with object modules produced by other language compilers or by assembler, and is the first module to receive control, the user must ensure that the entry point of the resulting executable program is resolved to the external symbol CEESTART. This happens automatically if the Enterprise PL/I for z/OS or PL/I for MVS & VM main procedure is first in the input to the linkage editor. Runtime errors occur if the executable program entry point is forced to some other symbol by use of the linkage editor ENTRY control statement.

Alternatively, the following linkage editor ENTRY control statement can be included in the input to the linkage editor:

```
ENTRY CEESTART
```

Binder control statements

The following sections describe when and how to use the INCLUDE and LIBRARY control statements with the binder.

Using the INCLUDE statement

Use the INCLUDE control statement to specify additional object modules or executable programs that you want included in the output executable program. Figure 32 contains an example of how to link-edit the CEEUOPT CSECT with your application. In the example, CEEUOPT is used to establish application runtime option defaults; see Chapter 9, "Using runtime options," on page 119 for more information.

```
//SYSLIB  DD DSNAME=CEE.SCEELKED,DISP=SHR
//SYSLIN  DD DSNAME=USER.OBJLIB(PROGRAM1),DISP=SHR
//        DD DDNAME=SYSIN
//SYSIN   DD *
     INCLUDE SYSLIB(CEEUOPT)
⋮
/*
```

Figure 32. Using the INCLUDE linkage editor control statement

Using the LIBRARY statement

Use the LIBRARY statement to direct the binder to search a library other than that specified in the SYSLIB DD statement. This method resolves only external references listed on the LIBRARY statement. All other unresolved external references are resolved from the library in the SYSLIB DD statement.

In Figure 33 the LIBRARY statement is used to resolve the external reference PROGRAM2 from the library described in the TESTLIB DD statement.

```
//SYSLIN  DD DSNAME=USER.OBJLIB(PROGRAM1),DISP=SHR
//        DD DDNAME=SYSIN
//TESTLIB DD DSNAME=USER.TESTLIB,DISP=SHR
//SYSIN   DD *
     LIBRARY TESTLIB(PROGRAM2)
⋮
/*
```

Figure 33. Using the LIBRARY linkage editor control statement

Data sets specified by the INCLUDE statement are incorporated as the linkage editor encounters the statement. In contrast, data sets specified by the LIBRARY statement are used only when there are unresolved references after all the other input is processed.

Link-edit options

SYSLMOD and SYSPRINT are the data sets used for output. The output varies, depending on the options you select, as shown in Table 10. The underlined options are the defaults.

Table 10. Selected link-edit options

Option	Function
XREF | **NOXREF**	Specifies if a cross-reference list of data variables is generated.
LIST | **NOLIST**	Specifies if a listing of the link-edit control statements is generated
NCAL | **CALL**	Specifies if the automatic library call mechanism should be used to locate the modules referred to by the executable program being processed. Use the NCAL command to suppress resolution of external differences. If you do not specify NCAL, the automatic call library mechanism is used to locate the modules referred to by the executable program being processed. Do not use NCAL if your application calls external routines that need to be resolved by an automatic library call.
PRINT | **NOPRINT**	Specifies if link-edit messages are written on the data set defined by the SYSLOUT DD statement.
MAP | **NOMAP**	Specifies if a map of the load modules is generated and placed in the PRINT data set.
RENT | **NORENT**	Specifies if a module is reenterable, that is it can be executed by more than one task at a time. A task may begin executing the module before a previous task has completed execution. See Chapter 11, "Making your application reentrant," on page 141 for additional information.

You always receive diagnostic and informational messages as the result of link-editing, even if you do not specify any options. You can get the other output items by specifying options in the PARM parameter of the EXEC statement in your JCL for link-editing. See "Writing JCL for the link-edit process" on page 72 for more information.

For more information about link-edit options, see *z/OS MVS Program Management: User's Guide and Reference* and *z/OS MVS Program Management: Advanced Facilities*.

Loading your application using the loader

Your input to the loader can be:
- One or more HLL object modules
- One or more previously link-edited HLL load modules that you want to combine into a single load module
- A combination of both

If you include any linkage control statements (such as LIBRARY or INCLUDE) as input to the loader, an informational error message is printed in the output listing only if you have a SYSLOUT DD statement in your input JCL (see Figure 35 on page 80). Otherwise, the linkage control statements are ignored.

In basic loader processing, as shown in Figure 34, the loader accepts data from its primary input source, a data set defined by the SYSLIN DD statement. This data set is the object module produced by the compiler. The loader uses the external symbol dictionary in SYSLIN to determine whether the object module includes any external references that have no corresponding external symbols in SYSLIN.

The loader searches the automatic call library, SYSLIB, (as shown in Figure 34) for the routines in which the external symbols are defined and includes them in the load module if they exist. If all external references are resolved, the load module is executed.

Your application cannot be executed until the appropriate runtime routines have been included.

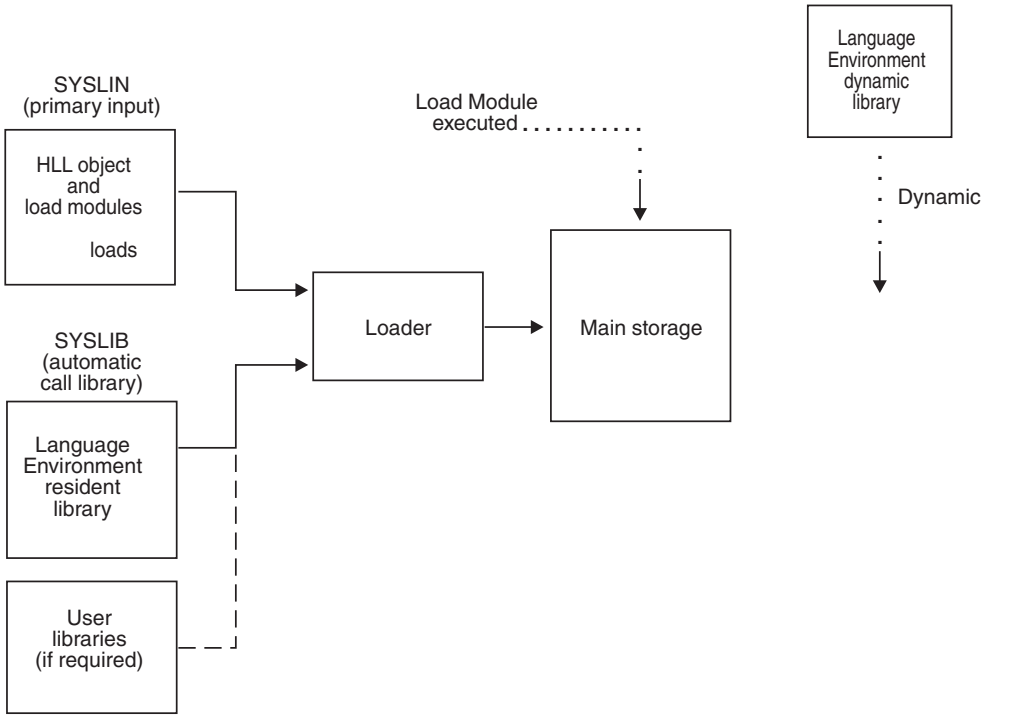

Figure 34. Basic loader processing

Writing JCL for the loader

If you use cataloged procedures (rather than supply all of the JCL required for a job step that invokes the loader), you should be familiar with JCL statements for the loader so you can make the best use of the loader and, if necessary, override the statements of the cataloged procedure.

The following sections describe the basic JCL statements for loading. For a description of the IBM-supplied cataloged procedures that include a loader step, see Table 15 on page 105.

Invoking the loader with the EXEC statement

Use the EXEC statement to invoke the loader. The EXEC statement to invoke the loader is:

```
//GO EXEC PGM=LOADER
```

Using the PARM parameter for loader options

Use the PARM parameter of the EXEC statement to specify loader options in your JCL for loader processing. For example, if you want your application to run even if abnormal conditions are detected, and you want a mapping of the executable program, specify the following:

```
//GO EXEC  PGM=LOADER,PARM='MAP,LET'
```

Requesting loader options

Table 11 shows you which options you can specify as PARM parameters when running the loader. The underlined options are the defaults.

Table 11. Selected loader options

Option	Function
MAP | **NOMAP**	Specifies if a map of the executable program is produced on SYSPRINT. If the map is produced, it gives the length and location of the main routine and all subroutines.
LET | **NOLET**	Specifies if the loader allows the executable program to run, even when abnormal conditions have been detected.
CALL | **NOCALL**	Specifies if the loader attempts to resolve external references.
EP=*name*	Specifies the name of the entry point of the application being loaded.
PRINT | **NOPRINT**	Specifies if loader messages are listed in the data set defined by the SYSLOUT DD statement.
RES | **NORES**	Specifies if the link pack area should be searched to resolve external references.
SIZE=*size*	Specifies the amount of storage allocated by loader processing; *size* includes the size of your executable program.

When you run the loader, you can request the options shown in Table 11 using the PARM parameter of the EXEC statement. For more information about specifying and using loader options, see *z/OS MVS Program Management: User's Guide and Reference* and *z/OS MVS Program Management: Advanced Facilities*.

Passing parameters through the loader

Code the PARM parameter as follows:

```
PARM='[loader-options] [/runtime-options] [/pgmparm]'
```

where *loader-options* is a list of loader options, *runtime-options* is a list of runtime options, and *pgmparm* is a parameter string passed to the main routine of the application to run. The following examples refer to the routine parameter as PP. If you specify NOEXECOPS on the main routine, you must omit the slash in front of *pgmparm*.

If you specify loader options and either runtime options or a routine parameter (or both) in the PARM parameter, the loader options are given first and are separated from the runtime options or routine parameter by a slash. If there are loader

options but no runtime options or routine parameters, the slash is omitted. If there are only runtime options or routine parameters, you must code the slash or slashes. If there is more than one option, separate the option keywords by commas.

The PARM field can have one of the following formats:

- If you use the special characters / or =, you must enclose the field in single quotes. For example:

  ```
  PARM='MAP,EP=FIRST/RPTOPTS(ON)/PP'
  PARM='MAP,EP=FIRST'
  PARM='//PP'
  ```

- If you do not use the / or = characters, and there is more than one loader option, you must enclose the options in parentheses. For example:

  ```
  PARM=(MAP,LET)
  ```

- If you do not use the / or = characters, and there is only one loader option, neither quotes nor parentheses are required. For example:

  ```
  PARM=MAP
  ```

Using DD statements for the standard loader data sets

The loader always requires one standard data set, defined by the SYSLIN DD statement. Three other standard data sets are optional, and, if you use them, you must define them in DD statements with the names SYSLOUT, SYSPRINT, and SYSLIB. The four data set names and characteristics are shown in Table 12.

Table 12. Standard loader data sets

ddname	Type	Function
SYSLIN	Input	Primary input data (normally the compiler output)
SYSLOUT	Output	Loader messages and module map listing
SYSPRINT	Output	Runtime messages and problem output listing
SYSLIB	Library	Automatic call library

Figure 35 is an example of the general job control procedure for creating and running an executable program under batch.

```
//STEP1    EXEC PGM=LOADER,PARM='MAP,LET'
//STEPLIB  DD DSN=CEE.SCEERUN,DISP=SHR
//         DD DSN=CEE.SCEERUN2,DISP=SHR
//SYSLIB   DD DSN=CEE.SCEELKED,DISP=SHR
//         DD DSN=USER.LOADLIB,DISP=SHR
//SYSLIN   DD DSN=USER.OBJLIB(PROGRAM1),DISP=SHR
//SYSLOUT  DD SYSOUT=A
//SYSPRINT DD SYSOUT=A
:
/*
```

Figure 35. JCL for creating an executable program

Running an application under batch

Under batch, you can request the execution of an executable program in an EXEC statement in your JCL. The EXEC statement marks the beginning of each step in a job or procedure, and identifies the executable program or cataloged procedure that executes.

The general form of the EXEC statement is:

```
//[stepname] EXEC PGM=program_name
```

The *program_name* is the name of the member or alias of the program to be executed. The specified program must be one of the following:

- An executable program that is a member of a private library specified in a STEPLIB DD statement in your JCL.
- An executable program that is a member of a private library specified in a JOBLIB DD statement in your JCL.
- An executable program that has been loaded into shared system storage, either the Link Pack Area (LPA) or the Extended Link Pack Area (ELPA).
- An executable program that is a member of a system library. Examples of system libraries are SYS1.LINKLIB and libraries specified in the LNKLST.

Unless you have indicated that the executable program is in a private library, it is assumed that the executable program is in a system library and the system libraries are searched for the name you specify.

Program library definition and search order

You can define the library in a DD statement in the following ways:

- With the ddname STEPLIB at any point in the job step. The STEPLIB is searched before any system library or JOBLIB specified in a JOBLIB DD statement for the job step in which it appears (although an executable program can also be passed to subsequent job steps in the usual way). When a STEPLIB and JOBLIB are both present, the STEPLIB is searched for the step in which it appears and, for that step, the JOBLIB is ignored.

  The system searches for executable programs in the following order of precedence:

  1. Library specified in STEPLIB statement
  2. Library specified in JOBLIB statement
  3. LPA or ELPA
  4. The system library SYS1.LINKLIB and libraries concatenated to it through the active LNKLSTxx member of SYS1.PARMLIB

  In the following example, the system searches USER.LOADLIB for the routine PROGRAM1 and USER.LOADLIB2 for the routine PROGRAMA:

  ```
  //JOB8    JOB  DAVE,MSGLEVEL=(2,0)
  //STEP1   EXEC PGM=PROGRAM1
  //STEPLIB DD   DSNAME=USER.LOADLIB,DISP=SHR
  //*
  //STEP2   EXEC PGM=PROGRAMA
  //STEPLIB DD   DSNAME=USER.LOADLIB2,DISP=SHR
  ```

- With the ddname JOBLIB immediately after the JOB statement in your JCL. This library is searched before the system libraries. If any executable program is not found in the JOBLIB, the system looks for it in the system libraries.

  In the following example, the system searches the private library USER.LOADLIB for the member PROGRAM1, reads the member into storage, and executes it.

  ```
  //JOB8    JOB  DAVE,MSGLEVEL=(2,0)
  //JOBLIB  DD   DSNAME=USER.LOADLIB,DISP=SHR
  //STEP1   EXEC PGM=PROGRAM1
  ```

Specifying runtime options under batch

Each time your application runs, a set of runtime options must be established. These options determine many of the properties of how the application runs, including its performance, error handling characteristics, storage management, and production of debugging information. Under batch, you can specify runtime options in any of the following places (for additional information about the ways to specify runtime options, see "Methods available for specifying runtime options" on page 119):

- In the CEEROPT CSECT, where region-level defaults are specified. For more information, see *z/OS Language Environment Customization*.
- In the CEEUOPT CSECT where user-supplied default options are located. For more information, see "CEEXOPT invocation for CEEUOPT" on page 126).
- In the CEEPRMxx parmlib member where system-level defaults are specified. For more information, see *z/OS Language Environment Customization*.
- `#pragma runopts` in C/C++ source code (for more information, see "Methods available for specifying runtime options" on page 119).
- In a PLIXOPT string in PL/I source code (for more information, see "Methods available for specifying runtime options" on page 119).
- In the PARM parameter of the EXEC statement in your JCL.
- In z/OS on the GPARM parameter of the IBM-supplied cataloged procedure (for more information, see *z/OS XL C/C++ User's Guide*).
- In the assembler user exit (for more information, see "CEEBXITA assembler user exit interface" on page 427).
- In the _CEE_RUNOPTS environment variable, when your application is running under z/OS UNIX and is invoked by one of the `exec` family of functions.

Chapter 6. Creating and executing programs under TSO/E

Under TSO/E, you process an application by compiling and link-editing the programs that make up the application, and then running the application.

The compiler produces an object module; the link-edit process takes the object module and produces an executable program. You can link-edit and run your application as separate steps (LINK and CALL) or you can link-edit and run your application as a single step (LOADGO).

Note: Several Fortran and C library routines have identical names. If your application contains any Fortran or assembler routine that uses a Fortran library routine, see "Resolving library module name conflicts between Fortran and C" on page 17 to resolve any potential name conflicts.

Basic link-editing and running under TSO/E

This topic describes how to accept and to override the default Language Environment runtime options under TSO/E.

Accepting the default runtime options

Use the LOADGO command to run an existing NOXPLINK-compiled object module under TSO/E and to accept the default Language Environment runtime options. See "Specifying runtime options and program arguments" on page 123 for more information on using runtime options. For example, the command

```
LOADGO ('userid.MYLIB.OBJLIB(MYPROG)') LIB ('CEE.SCEELKED')
```

does the following:

- Takes the existing object module MYPROG from the object library in which you have it stored
- Links in the Language Environment (text) link library SCEELKED
- Runs the new executable program

Overriding the default runtime options

The following example overrides the Language Environment defaults for the RPTOPTS and MSGFILE runtime options, and loads and runs the XPLINK-compiled program MYPROG:

```
LOADGO ('userid.MYLIB.OBJLIB(MYPROG)') 'RPTOPTS(ON), MSGFILE(OPTRPRT)/'
LIB ('CEE.SCEEBIND')
```

The Language Environment data sets SCEELKED link library, SCEEBND2 link library, and the SCEERUN dynamic library (needed before you can run your executable program) could have been installed with a different high-level qualifier than CEE. Check with your system administrator for the correct names.

The LOADGO command is described in detail in "Loading and running using the LOADGO command" on page 88.

© Copyright IBM Corp. 1991, 2015

Specifying runtime options with the CEEOPTS DD card

Language Environment supports the ability to provide additional runtime options through a DD card. The name of the DD must be CEEOPTS. The DD must be available during initialization of the "enclave" so that the options can be merged.

In the Language Environment Runtime Options report, when an option was last set in the CEEOPTS DD card, DD:CEEOPTS will be used in the "LAST WHERE SET" column.

The CEEOPTS DD is ignored under CICS, SPC and for programs invoked using one of the exec() family of functions.

Link-editing and running

The LINK command link-edits a compiled external procedure or combines two or more procedures to form a single executable program. You can run an executable program by using the CALL command. Use the LINK-and-CALL method of processing when you want to:

- Keep a copy of the executable program in an external data set
- Link-edit two or more external procedures to form a single executable program
- Run a program repeatedly, without changing the source code

To run a compiled program without keeping a copy of the executable program, use the LOADGO command.

Link-editing your application using the LINK command

The LINK command invokes the linkage editor, which converts one or more object modules into an executable program suitable for execution. Later, you can run the executable program using the CALL command (see “Using the CALL command to run your application” on page 87). The general form of the LINK command is:

Syntax

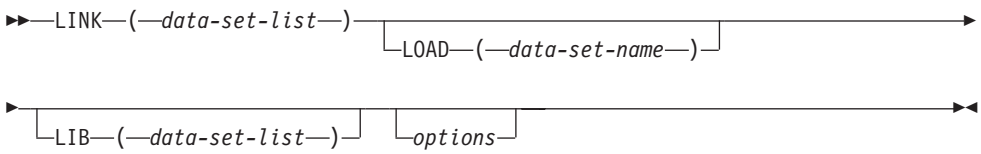

LINK (*data-set-list***)**
Specifies the names of the data sets containing the object modules to be link-edited. The variable *data-set-list* must contain at least one object module, but can also contain binder control statements. If you have only one name, you can omit the parentheses. If there are several names, you must separate them by commas or blanks within the parentheses. The rules for positioning control statements in relation to object modules are the same as for batch mode. If you specify a simple data set name, the system assumes the descriptive qualifier OBJ; that is, the data set name is of the form *userid.data-set-name*.OBJ.

LOAD (*data-set-name***)**
Specifies the name of the data set to contain the executable program generated

by the link-edit process. If you specify a simple name, the system adds the user-identification qualifier and the descriptive qualifier LOAD (*userid.data-set-name*.LOAD), and uses that as the data set name. The resulting executable program must be stored as a member in a PDS or PDSE. If you do not supply a member name, the executable program is placed in *member* TEMPNAME of the *userid.data-set-name*.LOAD data set. If you do not specify LOAD, *userid*.LOAD is used.

LIB (*data-set-list***)**
Specifies the names of data sets that contain user-supplied modules that you want to be link-edited by the automatic library call facility.

The appropriate link-edit libraries, including the Language Environment link-edit libraries, must be specified. See "Planning to link-edit and run" on page 8 for a description of the Language Environment link-edit libraries.

options
Specifies a list of link-edit processing options. You must separate the options with a valid delimiter such as a comma or blank. Table 14 on page 90 contains a partial listing of available link-edit options.

The following example shows how to:

- Link-edit two object modules named PROGRAM1 and CEEUOPT. CEEUOPT can be used to establish programmer runtime option defaults. See Chapter 9, "Using runtime options," on page 119 for more information.
- Load the resulting executable program in *member* PROGRAM1 in the library USER.LOADLIB.
- Specify the Language Environment library CEE.SCEELKED as the automatic call library for a non-XPLINK application.
- Generate a mapping of the executable program that is run by using the MAP option.
- Direct the linkage editor listing to the terminal by using the PRINT(*) option.

```
LINK ('USER.OBJLIB(PROGRAM1)','USER.OBJLIB(CEEUOPT)')
     LOAD('USER.LOADLIB(PROGRAM1)')
     LIB ('CEE.SCEELKED') MAP PRINT(*)
```

For more information about using the TSO/E LINK command and its options, see *z/OS TSO/E Command Reference*.

Using CMOD CLIST to invoke the TSO/E LINK command

You can use CMOD to build C modules or C ILC applications where C is the main routine. CMOD invokes the TSO/E LINK command by passing all CMOD parameters to that command. Any parameters not passed from CMOD have the normal LINK command default values. The CMOD CLIST resides in CEE.SCEECLST. The CMOD CLIST cannot be used to link XPLINK applications.

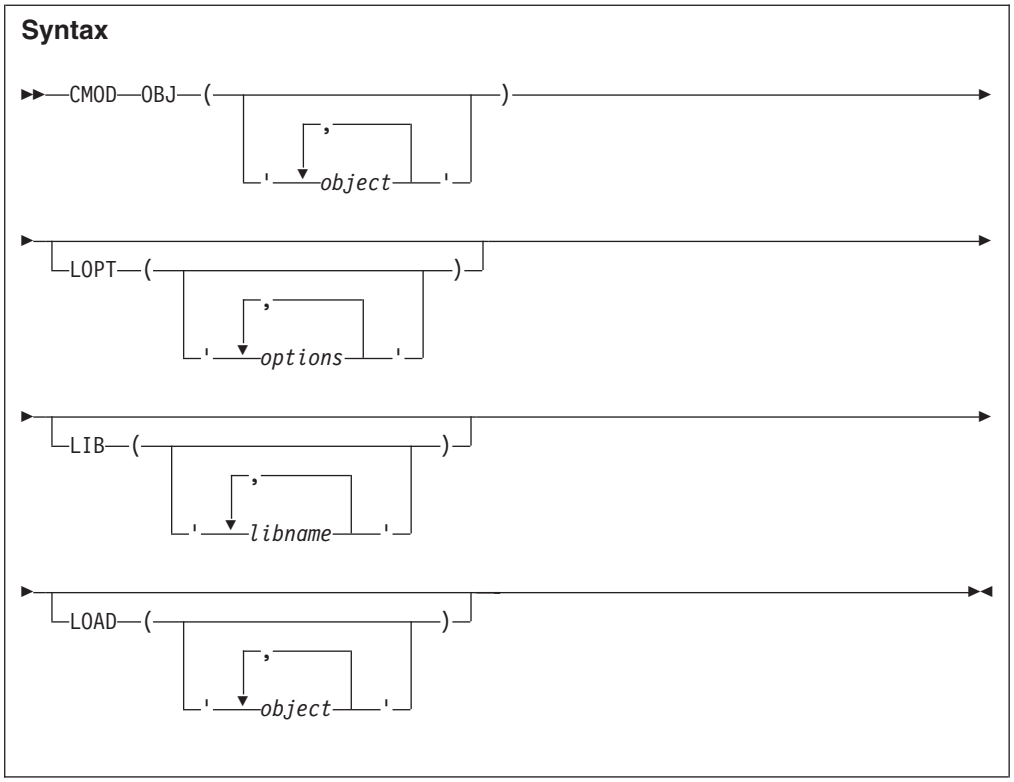

OBJ
Specifies input object data set names.

LOPT
Specifies a string of linkage editor options.

LIB
Specifies libraries that you want to use to resolve external references. These libraries are appended to the default C library functions.

LOAD
An output data set name. If you do not specify an output data set name, a name is generated for you. The name generated by the CLIST consists of your user prefix followed by LOAD(TEMPNAME).

Table 13 shows CMOD calls and their corresponding results:

Table 13. CMOD calls

Call	Result
`cmod obj(myobj)`	`link userid.myobj lib(cee.sceelked)`
`cmod obj(myobj) lib (mylib) lopt(rmode(24) amode(24))`	`link userid.myobj lib(userid.mylib cee.sceelked) rmode(24) amode(24)`
`cmod obj(myobj) lib (mylib) load(myload) lopt(amode(24))`	`link userid.myobj lib(userid.mylib cee.sceelked) load(myload) amode(24)`

Possible error messages are:

- CMOD: NO INPUT OBJECT DECK SPECIFIED (rc=16)

- CMOD: ERROR WITH INPUT OBJECT DECK (rc=16)
- Any error messages generated by LINK

Using the CALL command to run your application

The TSO/E CALL command loads and executes a specified executable program. To run an application successfully, the SCEERUN and SCEERUN2 dynamic libraries must be either in the link-list concatenation, or in a STEPLIB in the TSO/E logon procedure. As an alternative, the TSO/E Dynamic STEPLIB Facility (Program Offering 5798-DZW) can be used to dynamically allocate SCEERUN and SCEERUN2 to the execution environment. For more information about the TSO/E logon procedure, see *z/OS Program Directory* at the z/OS installation-related information website.

When you use the CALL command, you must also specify the ALLOCATE command to dynamically allocate the data sets required by the application you intend to run. For more information, see *z/OS TSO/E Command Reference*.

The general form of the CALL command is:

Syntax

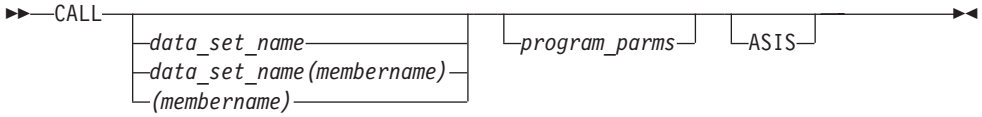

data-set-name
Specifies the data set that holds the executable program. If you specify the simple name of the data set, the system assumes the descriptive qualifier LOAD. If you do not specify a member name, the system assumes the name TEMPNAME.

You can also specify the member name of the data set that holds the executable program you plan to run, as indicated in the syntax diagram.

program_parms
A list of runtime options and program parameters passed to the main routine. Use a slash (/) to separate the runtime options and program parameters.

ASIS
Specifies that the program parameters are to be left in their original case. For C or C++, however, you must specify at least one lowercase character in the program parameter string for the case to be preserved, otherwise C or C++ lowercases the string.

For example, if you want to load and run member PROGRAM1 located in the data set USER.LOADLIB, and pass runtime options that generate storage and runtime options reports, specify the following:

```
CALL 'USER.LOADLIB(PROGRAM1)' 'RPTSTG(ON),RPTOPTS(ON)/'
```

For a summary of formatting considerations for specifying runtime options, see "Specifying runtime options and program arguments" on page 123.

The EXECOPS option for C and C++ is used to specify that runtime options passed as parameters at execution time are to be processed by Language Environment. The option NOEXECOPS specifies that runtime options are not to be processed from execution parameters and are to be treated as program parameters. For z/OS XL C/C++, a user can specify either EXECOPS or NOEXECOPS in a #pragma runopts directive or as a compiler option. EXECOPS is the default for both z/OS XL C/C++ and z/OS XL C++. If EXECOPS is specified, any runtime options specified in the CALL command are treated as program parameters.

Note: When using CALL to execute a program in the background under TSO/E with PGM=IKJEFT01, the ABTERMENC(ABEND) runtime option will not be processed correctly. To provide ABEND support under TSO/E, use PGM=IKJEFT1A or PGM=IKJEFT1B. For more information regarding these entry points, see *z/OS TSO/E Customization*.

TSO/E parameter list format

The TSO/E parameter list format differs depending on the language of the routine. Refer to Appendix D, "Operating system and subsystem parameter list formats," on page 563 for language-specific considerations.

Loading and running using the LOADGO command

Use the LOADGO command to create an executable program in main storage and then run it. When the application has run, TSO automatically deletes the executable program created by LOADGO. The general form of the LOADGO command is:

Syntax

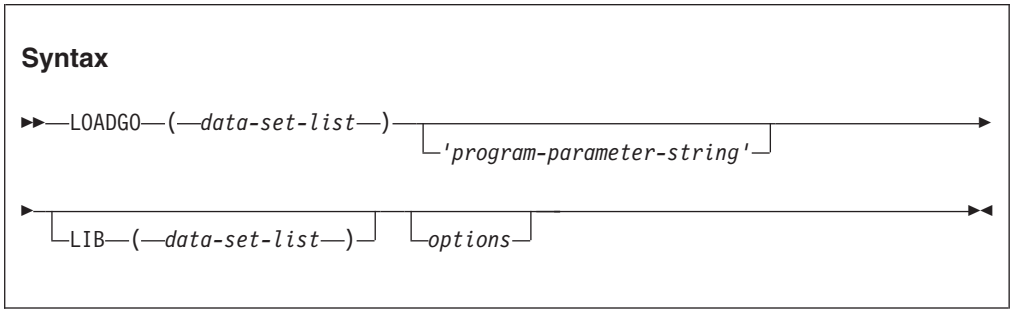

LOADGO (*data-set-list***)**
Specifies the names of one or more object modules or executable programs that you want to load and run. If you have only one name, you can omit the parentheses. If you have several names, you must separate them by commas or blanks.

The names can be data set names, names of members of data sets, or both.

program-parameter-string
Specifies runtime options and program parameters to be passed to the executable program at run time. Use a slash (/) to separate the runtime options and parameters that are passed to the main routine in the executable program. The possible combinations are described in "Specifying runtime options and program arguments" on page 123.

LIB (*data-set-list***)**
Specifies the names of data sets containing user-supplied modules that you want the automatic library call facility to link-edit.

You must also list the Language Environment resident library (SCEELKED for non-XPLINK applications or SCEEBIND for XPLINK applications). SCEELKED is installed into a data set with a high-level qualifier; for example, the name might be CEE.SCEELKED. If you are unsure of the name of the data set where SCEELKED has been installed at your location, contact your system administrator.

options
Specifies a list of loader options. You must separate the options with a valid delimiter such as a comma or blank space. For a description of loader options, see Table 14 on page 90 and *z/OS TSO/E Command Reference*.

Allocating data sets under TSO/E

When you use the LOADGO command under TSO/E, you must also specify the ALLOCATE command to dynamically allocate the data sets required by the application you intend to run. For more information, see *z/OS TSO/E Command Reference*.

Example of using LOADGO

The following example shows how to:

- Create an executable program using the object modules PROGRAM1 and CEEUOPT
- Specify the runtime options to produce the runtime options report (RPTOPTS) and the storage report (RPTSTG)
- Specify the Language Environment library CEE.SCEELKED as the automatic call library for a non-XPLINK application
- Generate a mapping of the executable program
- Direct the loader listing to the terminal

```
LOADGO ('USER.OBJLIB(PROGRAM1)','USER.OBJLIB(CEEUOPT)')
       'RPTOPTS(ON),RPTSTG(ON)/'
        LIB ('CEE.SCEELKED') MAP PRINT(*)
```

To run an application successfully under TSO/E, the SCEERUN dynamic library must be either in the link-list concatenation, or in a STEPLIB in the TSO/E logon procedure. As an alternative, the MVS/TSO Dynamic STEPLIB Facility (Program Offering 5798-DZW) can be used to dynamically allocate SCEERUN to the TSO/E execution environment. For more information about the TSO/E logon procedure, see *z/OS Program Directory* at the z/OS installation-related information website.

The EXECOPS option for C and C++ is used to specify that runtime options passed as parameters at execution time are to be processed by Language Environment. The option NOEXECOPS specifies that runtime options are not to be processed from execution parameters and are to be treated as program parameters. For z/OS XL C/C++, a user can specify either option in a `#pragma runopts` statement. For both z/OS XL C/C++ and z/OS XL C++ users, the options can be specified as compiler options. EXECOPS is the default for both z/OS XL C/C++ and z/OS XL C++. When EXECOPS is in effect, you can specify runtime options in the LOADGO command.

Link-edit and loader options

Table 14 on page 90 contains a partial listing of available link-edit and loader options.

Table 14. Selected loader options

Option	Action
CALL | **NOCALL**	CALL specifies that the data set specified in the LIB operand is to be searched to locate executable programs referred to by the module being processed. NOCALL specifies that the data set specified in the LIB operand is not to be searched to locate executable programs referred to by the module being processed. If NOCALL is specified, then RES is invalid.
SIZE(*integer*)	Specifies the size, in bytes, of the dynamic storage that the loader can use.
PRINT (*data_set_name*)	PRINT specifies the name of the data set that is used to contain the listing. You can direct output to the terminal by specifying PRINT(*).
MAP | **NOMAP**	MAP generates a map of the executable programs and places them in the PRINT data set. NOMAP suppresses the map listing.
LET | **NOLET**	LET specifies that the loader attempts to execute your application even if an error of severity 2 or greater is found. NOLET suppresses execution if an error of severity 2 or greater is found.
RES | **NORES**	RES specifies that the link pack area is to be searched for the executable program (referred to by the module being processed) before the specified libraries are searched. If you also specify the NOCALL operand, the RES option is not valid. NORES specifies that the link pack area is not to be searched for the executable program referred to by the module being processed.

Using the iconv utility and ICONV CLIST for C/C++

The `iconv` utility uses the `iconv_open()`, `iconv()`, and `iconv_close()` functions to convert the input file records from the coded character set definition for the input code page to the coded character set definition for the output code page. There is one record in the output file for each record in the input file. No padding or truncation of records is performed.

The `iconv` utility can also perform BiDi layout transformation (for example, shaping and reordering) on the data to be converted according to the two environment variables, _BIDION and _BIDIATTR. See "Bidirectional Language Support" in *z/OS XL C/C++ Programming Guide* for more information on BiDi layout transformation. See "Using Environment Variables" in *z/OS XL C/C++ Programming Guide* for a description of _BIDION and _BIDIATTR.

See *z/OS XL C/C++ User's Guide* for information on the `iconv` utility.

When conversions are performed between single-byte code pages, the output records are the same length as the input records. When conversions are performed

between double-byte code pages, the output records could be longer or shorter than the input records because the shift-out and shift-in characters could be added or removed.

The ICONV CLIST invokes the `iconv` utility to copy the input data set to the output data set and convert the characters from the input code page to the output code page.

Using the genxlt utility and GENXLT CLIST for C/C++

The `genxlt` utility reads character conversion information from an input file and writes the compiled version to an output file. The input file contains directives that are acted upon by the `genxlt` utility to produce the compiled version of the conversion table. See *z/OS XL C/C++ User's Guide* for more information on the `genxlt` utility.

The GENXLT CLIST invokes the `genxlt` utility to read the character conversion information and produce the conversion table. It then invokes the system linkage editor to build the executable program.

Running your application under TSO/E

You can run your TSO/E application in the following ways:

- Use LOADGO to create a module in main storage and then run it. For a description of the LOADGO command, see "Loading and running using the LOADGO command" on page 88.
- Use the CALL command to run an executable program that you have created using LINK. For a description of the LINK command, see "Link-editing your application using the LINK command" on page 84. For a description of the CALL command, see "Using the CALL command to run your application" on page 87.
- Run your application as a command processor.

Chapter 7. Creating and executing programs using z/OS UNIX System Services

The interface to the linkage editor for z/OS UNIX System Services (z/OS UNIX) C applications is the z/OS UNIX `c89` utility or the `cc` utility, and for C++ applications it is the `c++` utility. You can use them to compile and link-edit a z/OS UNIX C/C++ program in one step, or link-edit application object modules after the compilation. You must, however, invoke one of the z/OS UNIX shells before you can run the `c89` utility. For more information on using these utilities, see *z/OS UNIX System Services Command Reference*.

Fortran applications are not supported under z/OS UNIX. When POSIX threading services are used, Fortran routines can only run in the *initial process thread (IPT)*.

COBOL programs are supported under z/OS UNIX. See "Running COBOL programs under z/OS UNIX" on page 98 for more information.

Enterprise PL/I for z/OS has support for z/OS UNIX that is essentially the same as that of C++. Therefore everything in this topic that applies to C++ is also applicable to Enterprise PL/I for z/OS.

PL/I for MVS & VM routines are supported under z/OS UNIX. PL/I for MVS & VM routines can run in the IPT without any unique restrictions other than those described in the appropriate migration guide in the IBM Enterprise PL/I for z/OS library (http://www.ibm.com/support/docview.wss?uid=swg27036735). PL/I for MVS & VM routines can run in the non-IPTs created by C/C++ routines with some restrictions. Limited PL/I – C/C++ ILC is supported in non-IPTs. See "Basic link-editing and running PL/I routines under z/OS UNIX with POSIX(ON)" on page 99 for more information.

PL/I MTF applications require z/OS UNIX services. PL/I MTF applications do not support ILC with C/C++ and must not invoke any z/OS UNIX services through an assembler program; otherwise the results are unpredictable.

Basic link-editing and running C/C++ applications under z/OS UNIX

z/OS UNIX supports the following environments for running your z/OS UNIX C/C++ applications:

- z/OS UNIX shells
- TSO/E
- Batch
- z/OS UNIX shells through MVS batch

Using the z/OS UNIX-supplied utilities `c89/cc/c++`, you can compile and link-edit a z/OS UNIX C/C++ application in one step, or link-edit application object modules separately. To produce an executable file, invoke `c89` and pass it object modules (*file*`.o` z/OS UNIX files or *file*`.OBJ` MVS data sets) without using the `-c` option.

See *z/OS UNIX System Services Command Reference* for information about the `c89` utility.

© Copyright IBM Corp. 1991, 2015

Invoking a shell from TSO/E

To begin a z/OS UNIX shell session, you first log on to TSO/E and then invoke the TSO/E OMVS command. This starts a login shell, from which you can enter shell commands.

You can also login with rlogin or telnet.

See *z/OS UNIX System Services User's Guide* for additional information on starting a shell session.

Using the z/OS UNIX c89 utility to link-edit and create executable files

To link-edit a z/OS UNIX C/C++ application's object modules to produce an executable file, specify the `c89` utility and pass it object modules (*file*`.o` z/OS UNIX files or `//`file.OBJ MVS data sets). The `c89`utility recognizes that these are object modules produced by previous C/C++ compilations and does not invoke the compiler for them.

To compile source files without link-editing them, use the `c89 -c` option to create object modules only. You can use the `-o` option with the command to specify the name and location of the executable file to be created.

For a complete description of all the `c89` options, see *z/OS UNIX System Services Command Reference*.

- To link-edit an XPLINK-compiled application object module to create the `mymodx.out` executable file in the current directory, specify:

  ```
  c89 -o mymodx.out -Wl,xplink usersource.o
  ```

- To link-edit an application object module to create the default executable file `a.out` in the working directory, specify:

  ```
  c89 usersource.o
  ```

- To link-edit an application object module to create the `mymod.out` executable file in the `app/bin` directory, relative to your working directory, specify:

  ```
  c89 -o app/bin/mymod.out usersource.o
  ```

- To link-edit several application object modules to create the `mymod.out` executable file in the `app/bin` directory, relative to your working directory, specify:

  ```
  c89 -o app/bin/mymod.out usersrc.o ottrsrc.o "//PGM.OBJ(PW...APP)"
  ```

- To link-edit an application object module to create the MYLOADMD executable member of the MVS APPROG.LIB data set for your user ID, specify:

  ```
  c89 -o "//APPROG.LIB(MYLOADMD)" usersource.o
  ```

- To compile and link-edit an application source file with several previously compiled object modules to create the executable file `zinfo` in the `approg/lib` subdirectory, relative to your working directory, specify:

  ```
  c89 -o approg/lib/zinfo usersrc.c existobj.o
  "//PGM.OBJ(PWAPP)"
  ```

Running z/OS UNIX C/C++ application programs

This topic discusses the different ways you can run your z/OS UNIX C/C++ applications under z/OS.

z/OS UNIX application program environments

z/OS UNIX supports the following environments from which you can run your z/OS UNIX C/C++ applications:

- z/OS UNIX shell
- TSO/E

  You cannot directly call a z/OS UNIX application that resides in a z/OS UNIX file system from the TSO/E `READY` prompt. However, you can do so with a TSO/E BPXBATCH command, and with a REXX EXEC.
- MVS batch

  You cannot directly use the JCL EXEC statement to run a z/OS UNIX application program that resides in a z/OS UNIX file system because you cannot put an z/OS UNIX file name on the JCL EXEC statement. However, by using the BPXBATCH program, you can run a z/OS UNIX application that resides in an z/OS UNIX file. You supply the name of the program as an argument to the BPXBATCH program, which runs under MVS batch and invokes a z/OS UNIX shell environment. (BPXBATCH also lets you call a program directly without having to also run a shell.) You can also run a z/OS UNIX application that resides in a z/OS UNIX file system by calling a REXX EXEC to invoke it under MVS batch.

Placing an MVS application executable program in the file system

If you have a z/OS UNIX C/C++ application executable file as a member in an MVS data set and want to place it in the z/OS UNIX file system, you can use the OPUTX or OGETX z/OS UNIX TSO/E commands to copy the member into a z/OS UNIX file. For a description of these commands, see *z/OS UNIX System Services Command Reference*. For examples of using these commands to copy data sets to z/OS UNIX files, see *z/OS UNIX System Services User's Guide*.

Restriction on using 24-Bit AMODE programs

You cannot run an AMODE(24) C/C++ application that resides in an z/OS UNIX file. Any programs you intend to run from the file system must be AMODE(31), problem program state, PSW key 8 programs. If you plan to run an AMODE(24) C/C++ program from within a z/OS UNIX application, make sure the executable program resides in a MVS PDS or PDSE member. Any new z/OS UNIX C/C++ applications you develop should be AMODE(31). XPLINK-compiled applications must be AMODE(31), and they and will force the ALL31 runtime option to ON.

Running an MVS executable program from a z/OS UNIX shell

If your z/OS UNIX C/C++ application resides in MVS data sets and you need to run the application executable program from within a shell, you can pass a call to the module to TSO/E. In many cases you can also use the **tso** utility. If you entered the shell from TSO/E using the OMVS command, you can use the TSO function key to pass the command to TSO/E. For example, if your executable program is `myprog` in data set `my.loadlib`, type the following (from the shell) to pass the command to TSO/E:

```
tso "call 'my.loadlib(myprog)'"
```

When the program completes, the shell session is restored. You can also run an MVS program from a shell by associating it with a z/OS UNIX file by using the sticky bit or external link. See *z/OS UNIX System Services Command Reference* for more information on the **chmod** and the **ln** commands.

Running POSIX-enabled programs

There are different considerations for running POSIX-enabled programs depending on whether you are using a z/OS UNIX shell or are running outside the shell.

Running POSIX-enabled programs using a z/OS UNIX shell

Issuing the executable from a shell: Before an z/OS UNIX program can be run in a shell, it must be given the appropriate mode authority for a user or group of users. You can update the mode authority for an executable by using the `chmod` command. See *z/OS UNIX System Services Command Reference* for the format and description of `chmod`. Note that when `c89` creates an executable, the file is given execute permission for all users.

After you have updated the mode authority, enter the program name from the shell command line. For example,

- If you want to run the program `data_crunch` from your working directory,
- You have the directory where the program resides defined in your search path, and
- You are authorized to run the program,

enter:

```
data_crunch
```

When running such programs, you can specify invocation runtime options only by setting the environment variable _CEE_RUNOPTS before invoking the program. For example, under a z/OS UNIX shell you can use the `export` command. For example:

```
export _CEE_RUNOPTS="rpto(on)..."
```

To further update the runtime options, you can issue another `export`.

Issuing a setup shell script from a shell: To run a z/OS UNIX shell script that sets up a z/OS UNIX executable file and then runs the program, you give the appropriate mode authority for a user or group of users to run it. You can update the mode authority (access permission) for a shell script file by using the `chmod` command. See *z/OS UNIX System Services Command Reference* for the format and description of `chmod`. After mode authority has been given, enter the script file name from the shell command line.

Running an MVS batch z/OS UNIX C/C++ application file that is HFS-resident

To run a z/OS UNIX C/C++ executable application file from a z/OS UNIX file under MVS batch, invoke the IBM-supplied BPXBATCH program either from TSO/E, or by using JCL or a REXX EXEC (not batch). BPXBATCH performs an initial user login to run a specified program from the shell environment.

Before you invoke BPXBATCH, you must have the appropriate privilege to read from and write to z/OS UNIX files. You should also allocate STDOUT and STDERR files for writing any program output, such as error messages. Allocate the standard files using the PATH options on either the TSO/E ALLOCATE command or the JCL DD statement.

For a detailed discussion of the BPXBATCH program syntax and its use, and an example of running shell utilities under MVS batch using the BPXBATCH program, see *z/OS UNIX System Services Command Reference*.

Running POSIX-enabled programs outside the z/OS UNIX shells

Invoking BPXBATCH from TSO/E

You can invoke BPXBATCH from TSO/E in the following ways:

- From the TSO/E READY prompt
- From a CALL command
- As a REXX EXEC

If you want to run the /myap/base_comp application program from your user ID, direct its output to the file /myap/std/my.out. Write any error messages to the file /myap/std/my.err and copy the output and error data to MVS data sets. You could write a REXX EXEC similar to the following example:

```
/* base_comp REXX exec */
"Allocate File(STDOUT) Path('/u/myu/myap/std/my.out')
          Pathopts(OWRONLY,OCREAT,OTRUNC)
          Pathmode(SIRWXU) Pathdisp(DELETE,DELETE)"
"Allocate File(STDERR) Path('/u/myu/myap/std/my.err')
          Pathopts(OWRONLY,OCREAT,OTRUNC)
          Pathmode(SIRWXU) Pathdisp(DELETE,DELETE)"

"BPXBATCH PGM /u/myu/myap/base_comp"

"Allocate File(output1) Dataset('MYAPPS.STD(BASEOUT)')"
"Ocopy Indd(STDOUT) Outdd(output1) Text Pathopts(OVERRIDE)"

"Allocate File(output2) Dataset('MYAPPS.STD(BASEERR)')"
"Ocopy Indd(STDERR) Outdd(output2) Text Pathopts(OVERRIDE)"
```

Enter the name of the REXX EXEC from the TSO/E READY prompt to invoke BPXBATCH. When the REXX EXEC completes, the STDOUT and STDERR allocated files are deleted.

Invoking BPXBATCH using JCL

To invoke BPXBATCH using JCL, submit a job that executes an application program and allocates the standard files using DD statements. For example, if you want to run the /myap/base_comp application program from your user ID, direct its output to the file /myap/std/my.out. Direct any error messages to be written to the file /myap/std/my.err; code the JCL statements as follows:

```
//jobname  JOB ...
//stepname EXEC PGM=BPXBATCH,PARM='PGM /u/myu/myap/base_comp'
//STDOUT DD PATH='/u/myu/myap/std/my.out',
//         PATHOPTS=OWRONLY,OCREAT,OTRUNC),PATHMODE=SIRWXU
//STDERR DD PATH='/u/myu/myap/std/my.err',
//         PATHOPTS=OWRONLY,OCREAT,OTRUNC),PATHMODE=SIRWXU
```

Invoking the spawn syscall in a REXX EXEC from TSO/E

A REXX EXEC can directly call a program which resides in the z/OS UNIX file system. This can be done by using the spawn() syscall. The following is an example of a REXX program which can be called from TSO/E.

```
/* REXX */
RC = SYSCALLS('ON')
If RC<0 | RC>4 Then Exit RC
Address SYSCALL
fstdout = 'fstdout'
fstderr = 'fstderr'
'open' fstdout O_RDWR+O_TRUNC+O_CREAT 700
stdout = RETVAL
'open' fstderr O_RDWR+O_TRUNC+O_CREAT 700
stderr = RETVAL
map.0=-1
map.1=stdout
```

```
map.2=stderr
parm.0=1
parm.1='/bin/c89'
'spawn /bin/c89 3 map. parm. __environment.'
spid = RETVAL
serrno = ERRNO
If spid==-1 Then Do
  str ='unable to spawn' parm.1', errno='serrno
  'write' stderr 'str'
  Exit serrno
End
'waitpid (spid) waitpid. 0'
xrc = waitpid.W_EXITSTATUS
If xrc^=0 Then Do
  str =parm.1 'failed, exit status='xrc
  'write' stderr 'str'
End
Exit xrc
```

Running a z/OS UNIX C/C++ application program that is not HFS-resident

Submit a z/OS UNIX C/C++ application executable program (an executable file that is an MVS PDS or PDSE member) to run under the MVS batch environment using the JCL EXEC statement the same way you would submit a traditional C/C++ application. The POSIX(ON) runtime option should be specified.

Running COBOL programs under z/OS UNIX

COBOL programs are supported under z/OS UNIX.

In order to use COBOL under z/OS UNIX, the COBOL programs must be compiled with the Enterprise COBOL for z/OS compiler, COBOL for OS/390 & VM compiler or the COBOL for MVS & VM compiler, and the programs must be compiled with the RENT compiler option.

You can compile and link edit your COBOL programs in the z/OS UNIX shell with the **cob2** command. The **cob2** command is available with COBOL for OS/390 & VM V2R2 or Enterprise COBOL for z/OS.

Alternatively, you can compile your programs in TSO or batch and have the object module written to a z/OS UNIX file by using the PATH parameter instead of the DSNAME parameter for the SYSLIN DD. Once you have your object modules in a z/OS UNIX file, you can use the **c89** utility to create an executable file.

When you want to use COBOL programs under z/OS UNIX, be aware of the following situations:

- When COBOL is the main routine of a z/OS UNIX, process, parameters are not passed in the C `argv` and `argc` format. Instead the parameter list consists of three parameters passed by reference:
  1. Argument-count: a binary fullword integer containing the number of elements in each of the arrays that are passed as the second and third parameters.
  2. Argument-length-list: an array of pointers. The Nth entry in the array is the address of a fullword binary integer containing the length of the Nth entry in the Argument-list (the third argument).
  3. Argument-list: an array of pointers. The Nth entry in the array is the address of the Nth character string passed as an argument on the `spawn()`, `exec()`, or command invocation.

COBOL programs are not recommended as main programs because they are not portable to other platforms. Instead, use a C main routine and have it call the COBOL programs.

- DISPLAY UPON SYSOUT data is written to stdout unless a DD is allocated that matches the value in the OUTDD compiler option.
- In order to run COBOL programs in more than one thread, all of the COBOL programs have to be compiled with the Enterprise COBOL compiler using the THREAD compiler option.
- The COBOL SORT and MERGE statements are not supported.

For more information about compiling, link-editing, and running COBOL programs in a z/OS UNIX shell environment, see the appropriate version of the programming guide in the COBOL library at Enterprise COBOL for z/OS library (http://www-01.ibm.com/support/docview.wss?uid=swg27036733).

Basic link-editing and running PL/I routines under z/OS UNIX with POSIX(ON)

Note: The following section does not apply to Enterprise PL/I for z/OS; they only apply to the earlier PL/I products.

When the runtime option POSIX(ON) is specified, PL/I routines in the IPT follow the same rules and behave the same as when POSIX(ON) is not in effect.

PL/I routines in non-IPTs, however, must observe the following rules, or the result is unpredictable. No runtime diagnosis is provided to enforce these rules.

- The non-IPT must be created by a C/C++ routine or assembler program. PL/I routines must be reentrant and in AMODE(31). A PL/I routine can be the first routine in the thread. To ensure the PL/I-specific runtime is available at the time the PL/I routine is running in a non-IPT, one of the following must be true in the main executable program:
  - A PL/I routine directly calls a C/C++ routine
  - A C/C++ routine directly calls a PL/I routine
  - A PL/I for MVS & VM routine is present in the executable program
  - Language Environment PL/I signature CSECT CEESG010 is explicitly included in the executable program

  If none of the above exists in the main executable program and a PL/I routine is going to run in a particular thread, you must do one of the following in that thread:

  - Fetch or dynamically call an executable program that contains a PL/I routine
  - Fetch or dynamically call an executable program that contains Language Environment PL/I signature CSECT CEESG010
- PL/I routines in non-IPTs are supported in the same environments as the C/C++ routines, except the z/OS UNIX shells. The executable form of PL/I routines, however, can run under the shells in conjunction with C/C++ routines in the application using the utilities provided by z/OS UNIX.
- OS PL/I routines can be in non-IPTs. See the appropriate migration guide in the IBM Enterprise PL/I for z/OS library (http://www.ibm.com/support/docview.wss?uid=swg27036735) for the OS PL/I executable programs supported under Language Environment.
- The following functions are not supported:

  - PL/I language constructs associated with MTF, the Language Environment PL/I MTF-specific runtime option PLITASKCOUNT, the Language Environment PL/I MTF-specific trace facility via the runtime option TRACE(ON,,,LE=2), and the PL/I MTF-specific data set SIBMTASK. The language constructs are:
    - CALL statement with TASK, EVENT, or PRIORITY option
    - EVENT variable
    - COMPLETION and STATUS built-in function and pseudovariable
    - WAIT statement
    - PRIORITY built-in function and pseudovariable
    - DELAY statement
  - I/O using PL/I language statements is not supported except for the limited support provided using the SYSPRINT file and DISPLAY statement.
  - PL/I FETCH and RELEASE statements are not supported.
  - Controlled variables are not supported.
  - Data sharing among threads is limited. Variables must not be referred to across thread boundaries even though the scope of the PL/I names declaration is unchanged.
  - ON-unit inheritance is defined at the thread level. No ON-unit inheritance is provided from the creating threads.
- The following functions are supported with restrictions:
  - SYSPRINT

    If the SYSPRINT file is defined as STREAM OUTPUT EXTERNAL and it is opened in the IPT before any other threads are created, the SYSPRINT file can be shared among the threads. The file must remain open while other threads are using it. The file must be closed explicitly by the IPT or implicitly by Language Environment when the application terminates.
  - DISPLAY

    The DISPLAY statement without the REPLY option and EVENT option is supported.
  - CALL

    The PL/I routine in the non-IPT must not call a subroutine fetched in the initial thread, even if the routine has been fetched before the noninitial thread is created.
  - EXIT

    EXIT is not recommended. When it is used, only the current thread is exited. If the EXIT statement is used in the initial thread, the entire application terminates. There is no defined order as to which thread terminates first.
  - STOP

    STOP is not recommended. When it is used, the entire application terminates. There is no defined order as to which thread terminates first.
  - If a thread is designed to be used many times before it is terminated, reset the user return code by using PLIRETC(0) in the first PL/I routine in the thread.
- The z/OS UNIX-defined signals are handled in the same way for PL/I routines in non-IPT and IPT environments. If the z/OS UNIX signals are delivered to PL/I routines, the signals are ignored until the PL/I routine returns.

Basic link-editing and running PL/I MTF applications under z/OS UNIX

SIBMTASK is provided to create the main executable program for PL/I MTF applications. SIBMTASK must be concatenated before SCEELKED when the main executable program is created, whether you are creating a new PL/I MTF application or relink-editing an existing OS PL/I routine with Language Environment. SIBMTASK replaces PLITASK under OS PL/I. If the main executable program of your application is link-edited with SIBMTASK or OS PL/I PLITASK, but does not use multitasking functions, you might notice some performance loss during initialization and termination. The same releases of OS PL/I executable programs are supported by multitasking as well as nonmultitasking applications. The OS PL/I shared library support is the same for both multitasking and nonmultitasking applications.

PL/I multitasking follows the Language Environment program management model discussed in Chapter 13, “Program management model,” on page 161. PL/I MTF supports a single Language Environment process within an address space, and is supported in the initial enclave only. If a PL/I multitasking application contains nested enclaves, the initial enclave must contain a single task. Violation of any of these rules is not diagnosed and is likely to cause unpredictable results.

The POSIX(ON) runtime option is not supported for a PL/I MTF application and therefore no programs, including assembler programs, in the application can invoke any POSIX functions. If POSIX(ON) is in effect when a multitasking main executable program is encountered, the application will abend.

For a more detailed discussion of PL/I MTF support, see the IBM Enterprise PL/I for z/OS library (http://www.ibm.com/support/docview.wss?uid=swg27036735). For more information about migration considerations for OS PL/I MTF applications, see the appropriate migration guide in the IBM Enterprise PL/I for z/OS library (http://www.ibm.com/support/docview.wss?uid=swg27036735).

Chapter 8. Using IBM-supplied cataloged procedures

A cataloged procedure is a set of job control statements that are stored in a system library (for example SYS1.PROCLIB). The storage location for cataloged procedures is installation-defined and might differ at your location from what is shown here.

Within a cataloged procedure, there are typically one or more EXEC statements, each of which can be followed by one or more DD statements. You can retrieve a cataloged procedure from the library by using its member name in an EXEC statement of a job control statement in the input stream.

Cataloged procedures can contain statements for the processing of an entire job, or statements to process one or more steps of a job, with the remaining steps defined in job control statements in the input stream. A job can use several cataloged procedures to process one or more of the job steps, or it can use the same cataloged procedure in more than one job step.

You can use cataloged procedures to save time and reduce JCL errors. If the statements in the procedure do not match your requirements exactly, you can easily modify them or add new statements for the duration of a job.

The cataloged procedures shown in this section are intended for use as references and do not necessarily reflect the procedures as they are provided at your installation. If options are not explicitly supplied with the procedure, default options established at the installation apply. You can override these default options by using an EXEC statement that includes the desired options (see "Overriding and adding to EXEC statements" on page 115).

Invoking cataloged procedures

To invoke a cataloged procedure, specify its name in the PROC parameter of an EXEC statement. You do not need to code the keyword PROC. For example, to use the cataloged procedure CEEWLG, include the following statement in an appropriate position among your other job control statements in the input stream:

```
//stepname EXEC PROC=CEEWLG

or

//stepname EXEC CEEWLG
```

Either of these EXEC statements can be used to call the IBM-supplied cataloged procedure CEEWLG to process the job step specified in *stepname*.

A job that calls for a cataloged procedure to run can also contain DD statements that are applicable to the cataloged procedure, such as:

- Other cataloged procedures to be run
- Other (single or multiple) executions of the same cataloged procedure
- Executable programs to be run

Step names in cataloged procedures

The *stepname* in a cataloged procedure is the same as the abbreviated processor name. For example, the step that executes a compiled and link-edited program is

© Copyright IBM Corp. 1991, 2015

named GO. In the procedure named CEEWLG (see “CEEWLG — Link and run a Language Environment conforming non-XPLINK program” on page 109), the first step is named LKED, and the second is named GO. Some of the PROCs provided are for creating constructed reentrant C/C++ executables. See “Making your C/C++ program reentrant” on page 141 for a description of constructed reentrant C/C++ programs.

Some of these PROCs use a prelink step, for when the prelinker must still be used. Some have a P in their names, such as EDCPL, to denote the prelink step PLKED. Other PROCs, for which the prelinker was mandatory when the linkage editor was used (such as CBCCL) have just an L in their names, to denote both the prelink step PLKED and the link-edit step LKED.

PROCs which must use the binder (that is they cannot use the linkage editor), have a B in their names to denote the binder step BIND, such as CBCB. These typically have counterpart PROCs with an L in their names, such as CBCL, which can be used when the linkage editor must be used. These may also use the prelinker, and therefore may or may not have a P in their names.

PROCs which have an L in their names to denote the link-edit step LKED, which do not have a counterpart PROC with a B in their names, do not have a prelink step. These generic link-edit PROCs can be used with the binder, and also will work correctly with the linkage editor. In order for these generic link-edit PROCs to work with constructed reentrant C/C++ programs, the appropriate overrides must be used. See “Modifying cataloged procedures” on page 115 for some examples.

Unit names in cataloged procedures

The esoteric unit name used in IBM-supplied cataloged procedures is one of the following:

```
UNIT=SYSDA
UNIT=VIO
```

Esoteric unit names are defined during system initialization and installation; the installation should maintain a list of esoteric unit names. Both these names may be defined as VIO (virtual I/O) data sets. See *z/OS MVS JCL User's Guide* for more information about VIO data sets.

All of the data sets that can be created use one of these esoteric units names. Most of these are set up as temporary data sets, and some are typically overridden to become permanent data sets, by using procedure parameters, or by overriding procedure statements. See “Modifying cataloged procedures” on page 115 for more information about overriding statements in cataloged procedures.

Data set names in cataloged procedures

When you use DSNAME=&&*name* in a DD statement, it is a temporary data set that is deleted when the job terminates. If you want the data set to be kept, override the DD statement with a permanent data set name and specify the appropriate DISP parameters.

See "Required DD Statements" under “Writing JCL for the link-edit process” on page 72 for a detailed description of each of the data sets included in the cataloged procedures discussed in this topic. See “Overriding and adding to EXEC statements” on page 115 for instructions about overriding DD statements in cataloged procedures.

IBM-supplied cataloged procedures

The IBM-supplied cataloged procedures that you can use under Language Environment are listed in Table 15.

Table 15. IBM-supplied cataloged procedures

Procedure	Name	For more information, see:
Load and run a Language Environment-conforming non-XPLINK program	CEEWG	"CEEWG — Load and run a Language Environment conforming non XPLINK program" on page 108
Link-edit a Language Environment-conforming non-XPLINK program	CEEWL	"CEEWL — Link a Language Environment conforming non XPLINK program" on page 108
Link-edit and run a Language Environment-conforming non-XPLINK program	CEEWLG	"CEEWLG — Link and run a Language Environment conforming non-XPLINK program" on page 109
Load and run a Language Environment-conforming XPLINK program	CEEXR	"CEEXR — Load and run a Language Environment conforming XPLINK program" on page 110
Link-edit a Language Environment-conforming XPLINK program	CEEXL	"CEEXL — Link-edit a Language Environment conforming XPLINK program" on page 110
Link-edit and run a Language Environment-conforming XPLINK program	CEEXLR	"CEEXLR — Link and run a Language Environment conforming XPLINK program" on page 111
Compile a C program	EDCC	*z/OS XL C/C++ User's Guide*
Compile and link-edit a C program	EDCCL	*z/OS XL C/C++ User's Guide*
Compile and bind a C program	EDCCB	*z/OS XL C/C++ User's Guide*
Compile, bind, and run a C program	EDCCBG	*z/OS XL C/C++ User's Guide*
Compile, link-edit, and run a C program	EDCCLG	*z/OS XL C/C++ User's Guide*
Compile, prelink, link-edit, and run a C program	EDCCPLG	*z/OS XL C/C++ User's Guide*
Prelink and link-edit a C program	EDCPL	*z/OS XL C/C++ User's Guide*
Compile a C++ program	CBCC	*z/OS XL C/C++ User's Guide*
Compile and bind a C++ program	CBCCB	*z/OS XL C/C++ User's Guide*
Compile, bind, and run a C++ program	CBCCBG	*z/OS XL C/C++ User's Guide*
Bind a C++ program	CBCB	*z/OS XL C/C++ User's Guide*
Bind and run a C++ program	CBCBG	*z/OS XL C/C++ User's Guide*
Compile, prelink, and link-edit a C++ program	CBCCL	*z/OS XL C/C++ User's Guide*
Compile, prelink, link-edit, and run a C++ program	CBCCLG	*z/OS XL C/C++ User's Guide*
Prelink and link-edit a C++ program	CBCL	*z/OS XL C/C++ User's Guide*

Table 15. IBM-supplied cataloged procedures (continued)

Procedure	Name	For more information, see:
Prelink, link-edit, and run a C++ program	CBCLG	*z/OS XL C/C++ User's Guide*
Run a C++ program	CBCG	*z/OS XL C/C++ User's Guide*
Invoke the `iconv` (character-conversion) utility	EDCICONV	*z/OS XL C/C++ User's Guide*
Invoke the `genxlt` (generate a translate table) utility	EDCGNXLT	*z/OS XL C/C++ User's Guide*
Invoke the DSECT conversion utility	EDCDSECT	*z/OS XL C/C++ User's Guide*
Invoke the locale object utility	EDCLDEF	*z/OS XL C/C++ User's Guide*
Invoke the maintain an object library utility	EDCLIB	*z/OS XL C/C++ User's Guide*
Invoke the compile and maintain an object library utility	EDCCLIB	*z/OS XL C/C++ User's Guide*
Invoke the DLL rename utility	EDCDLLRN	*z/OS XL C/C++ User's Guide*
Invoke the demangle mangled names utility	CXXFILT	*z/OS XL C/C++ User's Guide*
Compile a COBOL program	IGYWC	The appropriate version of the COBOL programming guide in the COBOL library at Enterprise COBOL for z/OS library (http://www-01.ibm.com/support/docview.wss?uid=swg27036733).
Compile and link-edit a COBOL program	IGYWCL	The appropriate version of the COBOL programming guide in the COBOL library at Enterprise COBOL for z/OS library (http://www-01.ibm.com/support/docview.wss?uid=swg27036733).
Compile, link-edit, and run a COBOL program	IGYWCLG	The appropriate version of the COBOL programming guide in the COBOL library at Enterprise COBOL for z/OS library (http://www-01.ibm.com/support/docview.wss?uid=swg27036733).
Compile, prelink, and link-edit a COBOL program	IGYWCPL	The appropriate version of the COBOL programming guide in the COBOL library at Enterprise COBOL for z/OS library (http://www-01.ibm.com/support/docview.wss?uid=swg27036733).
Compile, prelink, link-edit, and run a COBOL program	IGYWCPLG	The appropriate version of the COBOL programming guide in the COBOL library at Enterprise COBOL for z/OS library (http://www-01.ibm.com/support/docview.wss?uid=swg27036733).

Table 15. IBM-supplied cataloged procedures (continued)

Procedure	Name	For more information, see:
Compile, load, and run a COBOL program	IGYWCG	The appropriate version of the COBOL programming guide in the COBOL library at Enterprise COBOL for z/OS library (http://www-01.ibm.com/support/docview.wss?uid=swg27036733).
Prelink and link-edit a COBOL program	IGYWPL	The appropriate version of the COBOL programming guide in the COBOL library at Enterprise COBOL for z/OS library (http://www-01.ibm.com/support/docview.wss?uid=swg27036733).
Link-edit a Fortran program	AFHWL	"AFHWL — Link a program written in Fortran" on page 112
Link-edit and run a Fortran program	AFHWLG *Enterprise PL/I for z/OS*	"AFHWLG — Link and run a program written in Fortran" on page 113
Change any external names in conflict between C and Fortran to the Fortran-recognized name	AFHWN	"AFHWN — Resolving name conflicts between C and Fortran" on page 114
Separate the nonshareable and shareable parts of a Fortran object module, and link-edit	AFHWRL	"Making your Fortran program reentrant" on page 142
Separate the nonshareable and shareable parts of a Fortran object module, link-edit, and execute	AFHWRLG	"Making your Fortran program reentrant" on page 142
Compile an Enterprise PL/I for z/OS program	IBMZC	*Enterprise PL/I for z/OS*
Compile and bind an Enterprise PL/I for z/OS program	IBMZCB	*Enterprise PL/I for z/OS*
Compile, bind and run an Enterprise PL/I for z/OS program	IBMZCBG	*Enterprise PL/I for z/OS*
Compile, load and run an Enterprise PL/I for z/OS program	IBMZCG	*Enterprise PL/I for z/OS*
Compile, prelink and load/run an Enterprise PL/I for z/OS program using the loader	IBMZCPG	*Enterprise PL/I for z/OS*
Compile, prelink and link-edit an Enterprise PL/I for z/OS program	IBMZCPL	*Enterprise PL/I for z/OS*
Compile, prelink, link-edit and run an Enterprise PL/I for z/OS program	IBMZCPLG	*Enterprise PL/I for z/OS*
Compile a PL/I program	IEL1C	*PL/I for MVS & VM Programming Guide*
Compile, load, and run a PL/I program	IEL1CG	*PL/I for MVS & VM Programming Guide*
Compile and link-edit a PL/I program	IEL1CL	*PL/I for MVS & VM Programming Guide*

Table 15. IBM-supplied cataloged procedures (continued)

Procedure	Name	For more information, see:
Compile, link-edit, and run a PL/I program	IEL1CLG	*PL/I for MVS & VM Programming Guide*

The following sections provide more details about, and example invocations of, the language-independent cataloged procedures CEEWG, CEEWL, CEEWLG, CEEXR, CEEXL and CEEXLR.

CEEWG — Load and run a Language Environment conforming non XPLINK program

The CEEWG cataloged procedure shown in Figure 36 includes the GO step, which loads an object module produced by the compiler and executes the load module.

The following DD statement, indicating the location of the object module, must be supplied in the input stream to the GO step:

```
//GO.SYSIN DD *      (or appropriate parameters)
```

The data set SCEELKED must be included in your link-edit SYSLIB concatenation. This is the name of the Language Environment resident library. (The high-level qualifier of this resident library might have been changed at your installation.)

The data set SCEERUN must be included in the STEPLIB DD statement for the GO step. (The name of this load library might have been changed at your installation.)

If the application refers to any data sets in the execution step (such as user-defined files or SYSIN), DD statements that define these data sets must be provided.

```
//CEEWG    PROC LIBPRFX='CEE'
//GO       EXEC PGM=LOADER,REGION=2048K
//SYSLIB   DD   DSNAME=&LIBPRFX..SCEELKED,DISP=SHR
//SYSLOUT  DD   SYSOUT=*
//SYSLIN   DD   DDNAME=SYSIN
//STEPLIB  DD   DSNAME=&LIBPRFX..SCEERUN,DISP=SHR
//SYSPRINT DD   SYSOUT=*
//CEEDUMP  DD   SYSOUT=*
//SYSUDUMP DD   SYSOUT=*
```

Figure 36. Cataloged procedure CEEWG, which loads and runs a program written in any Language Environment-conforming HLL

CEEWL — Link a Language Environment conforming non XPLINK program

The CEEWL cataloged procedure shown in Figure 37 on page 109 includes the LKED step that invokes the binder (symbolic name HEWL) to link edit an object module.

The following DD statement, indicating the location of the object module, must be supplied in the input stream:

```
//LKED.SYSIN DD *      (or appropriate parameters)
```

The data set SCEELKED must be included in your link-edit SYSLIB concatenation. This is the name of the Language Environment link-edit library. (The high-level qualifier of this link-edit library might have been changed at your installation.)

```
//CEEWL    PROC LIBPRFX='CEE',
//              PGMLIB='&&GOSET',GOPGM=GO
//LKED     EXEC PGM=HEWL,REGION=1024K
//SYSLIB   DD   DSNAME=&LIBPRFX..SCEELKED,DISP=SHR
//SYSPRINT DD   SYSOUT=*
//SYSLIN   DD   DDNAME=SYSIN
//SYSLMOD  DD   DSNAME=&PGMLIB(&GOPGM),
//              SPACE=(TRK,(10,10,1)),
//              UNIT=SYSDA,DISP=(MOD,PASS)
//SYSUT1   DD   UNIT=SYSDA,SPACE=(TRK,(10,10))
```

Figure 37. Cataloged procedure CEEWL, which link-edits a program written in any Language Environment-conforming HLL

CEEWLG — Link and run a Language Environment conforming non-XPLINK program

The CEEWLG cataloged procedure in Figure 38 includes the LKED step, which invokes the binder (symbolic name HEWL) to link-edit an object module, and the GO step, which executes the executable program produced in the first step.

The following DD statement, indicating the location of the object module, must be supplied in the input stream:

```
//LKED.SYSIN DD *      (or appropriate parameters)
```

The data set SCEELKED must be included in your link-edit SYSLIB concatenation. This is the name of the Language Environment link-edit library. (The high-level qualifier of this link-edit library might have been changed at your installation.)

The data set SCEERUN must be included in the STEPLIB DD statement for the GO step. (The name of this load library might have been changed at your installation.)

If the application refers to any data sets in the execution step (such as user-defined files or SYSIN), you must also provide DD statements that define these data sets.

```
//CEEWLG   PROC LIBPRFX='CEE',GOPGM=GO
//LKED     EXEC PGM=HEWL,REGION=1024K
//SYSLIB   DD   DSNAME=&LIBPRFX..SCEELKED,DISP=SHR
//SYSPRINT DD   SYSOUT=*
//SYSLIN   DD   DDNAME=SYSIN
//SYSLMOD  DD   DSNAME=&&GOSET(&GOPGM),SPACE=(TRK,(10,10,1)),
//              UNIT=SYSDA,DISP=(MOD,PASS)
//SYSUT1   DD   UNIT=SYSDA,SPACE=(TRK,(10,10))
//GO       EXEC PGM=*.LKED.SYSLMOD,COND=(4,LT,LKED),REGION=2048K
//STEPLIB  DD   DSNAME=&LIBPRFX..SCEERUN,DISP=SHR
//SYSPRINT DD   SYSOUT=*
//CEEDUMP  DD   SYSOUT=*
//SYSUDUMP DD   SYSOUT=*
```

Figure 38. Cataloged procedure CEEWLG, which link-edits and runs a program written in any Language Environment-conforming HLL

CEEXR — Load and run a Language Environment conforming XPLINK program

The CEEXR cataloged procedure shown in Figure 39 includes the GO step, which loads and executes an XPLINK program module specified on input parameters to the procedure.

The data sets SCEERUN and SCEERUN2 must be included in the STEPLIB DD statement for the GO step. (The high-level qualifier of these load libraries might have been changed at your installation.)

If the application refers to any data sets in the execution step (such as user-defined files), DD statements that define these data sets must be provided.

```
//CEEXR    PROC PGMLIB=,               < INPUT STEPLIB ... REQUIRED
//   GOPGM=,                           < INPUT PROGRAM ... REQUIRED
//   LIBPRFX='CEE',                    < PREFIX FOR LIBRARY DSN
//   GREGSIZ='2048K',                  < EXECUTION REGION SIZE
//   GPARMS='XPLINK(ON),TERMTHDACT(UADUMP)/' < RUN-TIME OPTS
//GO       EXEC PGM=&GOPGM,REGION=&GREGSIZ,
//         PARM='&GPARMS'
//STEPLIB  DD   DSNAME=&LIBPRFX..SCEERUN,DISP=SHR
//         DD   DSNAME=&LIBPRFX..SCEERUN2,DISP=SHR
//         DD   DSNAME=&PGMLIB,DISP=SHR
//SYSPRINT DD   SYSOUT=*
//CEEDUMP  DD   SYSOUT=*
//SYSUDUMP DD   SYSOUT=*
```

Figure 39. Cataloged procedure CEEXR, which loads and runs a program-compiled XPLINK

CEEXL — Link-edit a Language Environment conforming XPLINK program

The CEEXL cataloged procedure shown in Figure 40 on page 111 includes the LKED step that invokes the Binder (symbolic name IEWL) to link-edit an object module specified on input parameters to the procedure.

Any side-decks necessary to resolve references in this object module to DLLs must be specified on a SYSIMP DD statement.

The data set SCEEBIND must be included in your link-edit SYSLIB concatenation. This is the name of the Language Environment link-edit library for XPLINK applications. (The high-level qualifier of this link-edit library might have been changed at your installation.)

```
//CEEXL    PROC INFILE=,               < INPUT ... REQUIRED
//   LIBPRFX='CEE',                    < PREFIX FOR LIBRARY DSN
//   LREGSIZ='20M',                    < BINDER REGION SIZE
//   LPARMS='MAP,LIST=NOIMP',          < ADDITIONAL BINDER PARMS
//   OUTFILE='&&GSET(GO),DISP=(NEW,PASS),UNIT=SYSALLDA,SPACE=(TRK,(7,7,
//            1)),DSNTYPE=LIBRARY'
//LKED     EXEC PGM=IEWL,REGION=&LREGSIZ,
//         PARM='AMODE=31,RENT,DYNAM=DLL,CASE=MIXED,&LPARMS'
//SYSLIB   DD   DSNAME=&LIBPRFX..SCEEBIND,DISP=SHR
//SYSPRINT DD   SYSOUT=*
//SYSLIN   DD   DSNAME=&INFILE,DISP=SHR
//         DD   DSNAME=&LIBPRFX..SCEELIB(CELHS003),DISP=SHR
//         DD   DSNAME=&LIBPRFX..SCEELIB(CELHS001),DISP=SHR
//         DD   DDNAME=SYSIN
//SYSLMOD  DD   DSNAME=&OUTFILE
//SYSUT1   DD   UNIT=SYSALLDA,SPACE=(TRK,(10,10))
//SYSDEFSD DD   DUMMY
//SYSIN    DD   DUMMY
```

Figure 40. Cataloged procedure CEEXL, which link-edits a program-compiled XPLINK

CEEXLR — Link and run a Language Environment conforming XPLINK program

The CEEXLR cataloged procedure shown in Figure 41 on page 112 includes the LKED step, which invokes the Binder (symbolic name IEWL) to link-edit an object module, and the GO step, which executes the program module produced in the first step.

Any side-decks necessary to resolve references in this object module to DLLs must be specified on a SYSIMP DD statement.

The data set SCEEBIND must be included in your link-edit SYSLIB concatenation. This is the name of the Language Environment link-edit library for XPLINK applications. (The high-level qualifier of this link-edit library might have been changed at your installation.)

The data sets SCEERUN and SCEERUN2 must be included in the STEPLIB DD statement for the GO step. (The high-level qualifier of these load libraries might have been changed at your installation.)

If the application refers to any data sets in the execution step (such as user-defined files or SYSIN), DD statements that define these data sets must be provided.

```
//CEEXLR   PROC INFILE=,               < INPUT ... REQUIRED
//   LIBPRFX='CEE',                    < PREFIX FOR LIBRARY DSN
//   LREGSIZ='20M',                    < BINDER REGION SIZE
//   LPARMS='MAP,LIST=NOIMP',          < ADDITIONAL BINDER PARMS
//   GREGSIZ='2048K',                  < EXECUTION REGION SIZE
//   GPARMS='XPLINK(ON),TERMTHDACT(UADUMP)/', < RUN-TIME OPTS
//   OUTFILE='&&GSET(GO),DISP=(NEW,PASS),UNIT=SYSALLDA,SPACE=(TRK,(7,7,
//             1)),DSNTYPE=LIBRARY'
//LKED     EXEC PGM=IEWL,REGION=&LREGSIZ,
//         PARM='AMODE=31,RENT,DYNAM=DLL,CASE=MIXED,&LPARMS'
//SYSLIB   DD   DSNAME=&LIBPRFX..SCEEBIND,DISP=SHR
//SYSPRINT DD   SYSOUT=*
//SYSLIN   DD   DSNAME=&INFILE,DISP=SHR
//         DD   DSNAME=&LIBPRFX..SCEELIB(CELHS003),DISP=SHR
//         DD   DSNAME=&LIBPRFX..SCEELIB(CELHS001),DISP=SHR
//         DD   DDNAME=SYSIN
//SYSLMOD  DD   DSNAME=&OUTFILE
//SYSUT1   DD   UNIT=SYSALLDA,SPACE=(TRK,(10,10))
//SYSDEFSD DD   DUMMY
//GO       EXEC PGM=*.LKED.SYSLMOD,COND=(4,LT,LKED),REGION=&GREGSIZ,
//         PARM='&GPARMS'
//STEPLIB  DD   DSNAME=&LIBPRFX..SCEERUN,DISP=SHR
//         DD   DSNAME=&LIBPRFX..SCEERUN2,DISP=SHR
//SYSPRINT DD   SYSOUT=*
//CEEDUMP  DD   SYSOUT=*
//SYSUDUMP DD   SYSOUT=*
//SYSIN    DD   DUMMY
```

Figure 41. Cataloged procedure CEEXLR, which link-edits and runs a program-compiled XPLINK

AFHWL — Link a program written in Fortran

The AFHWL cataloged procedure shown in Figure 42 on page 113 includes the LKED step, which invokes the binder (symbolic name HEWL) to link-edit an object module. The procedure can be used to link-edit applications containing Fortran or assembler routines having names that conflict with existing C library routines, as discussed in “Resolving library module name conflicts between Fortran and C” on page 17.

The following DD statement, indicating the location of the object module, must be supplied in the input stream:

```
//LKED.SYSIN DD *     (or appropriate parameters)
```

The data sets SAFHFORT and SCEELKED must both be included in your link-edit SYSLIB concatenation (in that order). SAFHFORT is the name of the Fortran-specific link-edit library and is used to resolve certain Fortran intrinsic function names. SCEELKED is the name of the Language Environment link-edit library. (The high-level qualifier of this link-edit library might have been changed at your installation.)

```
//AFHWL    PROC LIBPRFX='CEE',
//             PGMLIB='&&GOSET',GOPGM=GO
//LKED     EXEC PGM=HEWL,REGION=1024K
//SYSLIB   DD   DSNAME=&LIBPRFX..SAFHFORT,DISP=SHR
//         DD   DSNAME=&LIBPRFX..SCEELKED,DISP=SHR
//SYSPRINT DD   SYSOUT=*
//SYSLIN   DD   DDNAME=SYSIN
//SYSLMOD  DD   DSNAME=&PGMLIB(&GOPGM),
//              SPACE=(TRK,(10,10,1)),
//              UNIT=SYSDA,DISP=(MOD,PASS)
//SYSUT1   DD   UNIT=SYSDA,SPACE=(TRK,(10,10))
```

Figure 42. Using AFHWL to link a program written in Fortran

AFHWLG — Link and run a program written in Fortran

The AFHWLG cataloged procedure shown in Figure 43 on page 114 includes the LKED step, which invokes the binder (symbolic name HEWL) to link-edit an object module, and the GO step, which executes the executable program produced in the first step. The procedure can be used to link-edit and run applications containing Fortran or assembler routines having names that conflict with existing C library routines, as discussed in “Resolving library module name conflicts between Fortran and C” on page 17.

The following DD statement, indicating the location of the object module, must be supplied in the input stream:

```
//LKED.SYSIN DD *       (or appropriate parameters)
```

The data sets SAFHFORT and SCEELKED must both be included in your link-edit SYSLIB concatenation (in that order). SAFHFORT is the name of the Fortran-specific link-edit library and is used to resolve certain Fortran intrinsic function names. SCEELKED is the name of the Language Environment link-edit library. (The high-level qualifier of this link-edit library might have been changed at your installation.)

The data set SCEERUN must also be included in the STEPLIB DD statement for the GO step. (The name of the load library might have been changed at your installation.)

If the application refers to any data sets in the execution step (such as user-defined files or SYSIN), you must also provide DD statements that define these data sets.

```
//AFHWLG   PROC LIBPRFX='CEE'
//LKED     EXEC PGM=HEWL,REGION=1024K
//SYSLIB   DD   DSNAME=&LIBPRFX..SAFHFORT,DISP=SHR
//         DD   DSNAME=&LIBPRFX..SCEELKED,DISP=SHR
//SYSPRINT DD   SYSOUT=*
//SYSLIN   DD   DDNAME=SYSIN
//SYSLMOD  DD   DSNAME=&&GOSET(GO),
//              SPACE=(TRK,(10,10,1)),
//              UNIT=SYSDA,DISP=(MOD,PASS)
//SYSUT1   DD   UNIT=SYSDA,SPACE=(TRK,(10,10))
//GO       EXEC PGM=*.LKED.SYSLMOD,COND=(4,LT,LKED),REGION=2048K
//STEPLIB  DD   DSNAME=&LIBPRFX..SCEERUN,DISP=SHR
//SYSPRINT DD   SYSOUT=*
//CEEDUMP  DD   SYSOUT=*
//SYSUDUMP DD   SYSOUT=*
```

Figure 43. Procedure AFHWLG, used to link and run a program written in Fortran

AFHWN — Resolving name conflicts between C and Fortran

The AFHWN cataloged procedure shown in Figure 44 includes the LKED step, which invokes the binder (symbolic name HEWL) to link-edit an object module.

The following DD statement, indicating the location of the object module, must be supplied in the input stream:

```
//LKED.SYSIN DD *     (or appropriate parameters)
```

The contents of the SYSIN data set must include the CHANGE statements in member AFHWNCH in SCEESAMP and the object module itself. See “Resolving library module name conflicts between Fortran and C” on page 17 for further details.

The data sets SAFHFORT and SCEELKED must both be included in your link-edit SYSLIB concatenation (in that order). SAFHFORT is the name of the Fortran-specific link-edit library and is used to resolve certain Fortran intrinsic function names. SCEELKED is the name of the Language Environment link-edit library. The high-level qualifier of this link-edit library might have been changed at your installation. Figure 44 shows the LKED in AFHWN.

```
//AFHWN    PROC LIBPRFX='CEE',
//              PGMLIB='&&GOSET',GOPGM=GO
//LKED     EXEC PGM=HEWL,REGION=1024K,PARM='NCAL,LET'
//SYSLIB   DD   DSNAME=&LIBPRFX..SAFHFORT,DISP=SHR
//         DD   DSNAME=&LIBPRFX..SCEELKED,DISP=SHR
//SYSPRINT DD   SYSOUT=*
//SCEESAMP DD   DSNAME=&LIBPRFX..SCEESAMP,DISP=SHR
//SYSLIN   DD   DDNAME=SYSIN
//SYSLMOD  DD   DSNAME=&PGMLIB(&GOPGM),
//              SPACE=(TRK,(10,10,1)),
//              UNIT=SYSDA,DISP=(MOD,PASS)
//SYSUT1   DD   UNIT=SYSDA,SPACE=(TRK,(10,10))
```

Figure 44. Cataloged procedure AFHWN, used in resolving name conflicts

Modifying cataloged procedures

You can modify the statements of a cataloged procedure for the duration of the job step in which it is invoked, either by overriding one or more parameters in the EXEC or DD statements or by adding DD statements to the procedure. Any parameter in a cataloged procedure, except the PGM=*progname* parameter in the EXEC statement, can be overridden. Parameters or statements not specified in the procedure can also be added. When a cataloged procedure is overridden or added to, the changes apply only during one execution. The changes do not affect the master copy of the cataloged procedure stored in the procedure library.

The following sections discuss overriding and adding to EXEC and DD statements, respectively. For complete details, see *z/OS MVS JCL Reference*.

Overriding and adding to EXEC statements

A parameter with a qualified name (qualified by the procedure step in which it is specified) applies only to the EXEC statement in which it is specified. If a parameter of an EXEC statement that invokes a cataloged procedure has an unqualified name, the parameter applies to all the EXEC statements in the cataloged procedure. For example, `REGION=2048` specifies a region size of 2048 for all of the EXEC statements in a given procedure, whereas `REGION.GO=2048` applies to only the GO step of the procedure.

If you want to modify a multiple step procedure, you can do so by specifying parameters with qualified names on a step-by-step basis. If you want to modify the entire procedure, specify the name of the parameter in an EXEC statement without qualifying it. The modifications override existing parameters in the cataloged procedure.

Overriding and adding DD statements

You can override or add a DD statement by specifying a DD statement whose name is composed of the *ddname* of the DD statement being overridden, preceded by the procedure *stepname* that qualifies that *ddname*:

```
//procstep.ddname  DD      (appropriate parms)
```

You must observe the following when overriding or adding a DD statement within a step in a procedure:

- Overriding DD statements must be in the same order in the input stream as they are in the cataloged procedure.
- DD statements to be added must follow overriding DD statements.

Additionally, you should be aware of the following when overriding a DD statement:

- To nullify a keyword parameter (except the DCB and AMP parameters), write the keyword and an equal sign followed by a comma in the overriding DD statement. For example, to nullify the use of the UNIT parameter, specify `UNIT=`, in the overriding DD statement.
- You can nullify a parameter by specifying a mutually exclusive parameter. For example, you can nullify the SPACE parameter by specifying the mutually exclusive SPLIT parameter in the overriding DD statement.
- There is no order of precedence for the parameters. Their placement (order of execution) does not matter.

- To override DD statements in a concatenation of data sets, you must provide one DD statement for each data set in the concatenation. Only the first DD statement in the concatenation should be named. If the DD statement you want to change or add follows one or more DD statements that will be unchanged, code one DD statement with blank operand for each unchanged DD statement ahead of the first DD statement that you want to change or add.

  For example, to add your load module data set, MY.LIB, to the runtime STEPLIB in a Language Environment cataloged procedure containing one data set whose DD statement you do not want to change, code:

  ```
  //GO.STEPLIB DD
  //           DD DSN=MY.LIB,DISP=SHR
  ```

  This causes your load module data set to be searched after the data set named in the STEPLIB DD statement in the cataloged procedure.

  To have another data set searched before any data sets already in the cataloged procedure, you must specify all the data sets in your overriding DD statements. For example, to have CEE.SIBMMATH searched before CEE.SCEELKED (assuming it is a non-XPLINK application), code:

  ```
  //LKED.SYSLIB DD DSN=CEE.SIBMMATH,DISP=SHR
  //            DD DSN=CEE.SCEELKED,DISP=SHR
  ```

  This causes the PL/I versions of the math routines to be link-edited into your load module rather than the identically named SCEELKED math routines.
- If the DDNAME=*ddname* parameter is specified in a cataloged procedure, it cannot be overridden; rather, it can refer to a DD statement supplied at the time of execution.

The example in Figure 45 shows how to override parameters in a cataloged procedure by:

- Changing the library prefix for the SCEELKED link library to SYS1
- Increasing the region for linking and running the application
- Passing the RPTSTG and RPTOPTS options to the load module when it is executed in the GO step of the procedure
- Specifying PROGRAM1 in USER.OBJLIB as the input object module to the binder

```
//CEEWLG   JOB
//*
//LINKGO EXEC CEEWLG,
//  LIBPRFX='SYS1',
//  REGION=2048K,
//  PARM.GO='RPTSTG(ON) RPTOPTS(ON)/'
//*
//LKED.SYSIN   DD DSN=USER.OBJLIB(PROGRAM1),DISP=SHR
//*
```

Figure 45. Overriding parameters in the CEEWLG cataloged procedure

Overriding generic link-edit procedures for constructed reentrant programs

To use generic link-edit procedures (as described in “Step names in cataloged procedures” on page 103), both the EXEC statement parameters and DD statements may need to be overridden.

The following are some examples of how to invoke the CEEWL PROC.

1. Creating a C executable which may be constructed reentrant:
   - Parameter COMPAT(CURRENT) assures the highest level of program object will be produced.
   - SCEELKEX allows direct resolution of C/C++ language function names.
   - DSNTYPE=LIBRARY assures that the output data set will be a PDSE (rather than a PDS). STORCLAS may also have to be specified for a new SMS managed data set.
   - Object module USER.OBJ(PROGRAM1) is input.

```
//CEEWL JOB
//*
//SETLIB SET LIBPRFX=CEE
//SETUSER SET USER=USER1
//*
//LINK EXEC CEEWL,
//  LIBPRFX=&LIBPRFX.,
//  PARM.LKED='COMPAT(CURRENT)'
//LKED.SYSLIB  DD DSN=&LIBPRFX..SCEELKEX,DISP=SHR
//             DD DSN=&LIBPRFX..SCEELKED,DISP=SHR
//LKED.SYSLMOD DD DSNTYPE=LIBRARY
//*
//LKED.SYSIN   DD DSN=&USER.OBJ(PROGRAM1),DISP=SHR
//*
```

2. Create a C DLL, which can also be used as an autocall library. In addition to the previous example:
   - DYNAM(DLL) causes the import and export information to be created and stored in the executable.
   - ALIASES(ALL) causes hidden aliases to be created for all external functions and variables, for subsequent use as an autocall library.
   - Program object USER.LOADLIB(CDLL) is output.
   - Definition side-deck USER.EXP(CDLL) is output (it contains IMPORT statements for all exported symbols).

```
//CEEWL JOB
//*
//SETLIB SET LIBPRFX=CEE
//SETUSER SET USER=USER1
  //*
  //LINK EXEC CEEWL,
  //  PARM.LKED='COMPAT(CURR),DYNAM(DLL),ALIASES(ALL)'
  //LKED.SYSLIB   DD DSN=&LIBPRFX..SCEELKEX,DISP=SHR
  //              DD DSN=&LIBPRFX..SCEELKED,DISP=SHR
  //LKED.SYSLMOD  DD DSN=&USER.LOADLIB(CDLL),DISP=SHR,
  //  DSNTYPE=LIBRARY
  //LKED.SYSDEFSD DD DSN=&USER.EXP(CDLL),DISP=SHR
  //*
  //LKED.SYSIN    DD DSN=&USER.OBJ(PROGRAM1),DISP=SHR
  //*
```

Chapter 9. Using runtime options

This topic describes Language Environment runtime option specification methods and runtime compatibility considerations.

Language Environment provides a set of IBM-supplied default runtime options that control certain aspects of program processing. A system programmer can modify the IBM-supplied defaults on a system-level or region-level basis to suit most applications at their site. An application programmer can further refine these options for individual programs. When an application runs, runtime options are merged in a specific order of precedence to determine the actual values in effect. For more information, see "Order of precedence" on page 122.

For syntax and detailed information about individual runtime options, including how Language Environment runtime options map to specific HLL options, see *z/OS Language Environment Programming Reference*.

Methods available for specifying runtime options

Language Environment runtime options can be specified in the following ways:

As system-level defaults

Runtime options can be established as system-level defaults through a member in the system parmlib. The format of the parmlib member name is CEEPRMxx. The member is identified during IPL by a CEE=xx statement, either in the IEASYSyy data set or in the IPL PARMS. After IPL, the active parmlib member can be changed with a SET CEE=xx command. Individual options can be changed with a SETCEE command.

For more information about specifying system-level default options, see *z/OS MVS Initialization and Tuning Reference* and *z/OS Language Environment Customization*.

As region-level defaults

The CEEXOPT macro can be used to create a CEEROPT load module to establish defaults for a particular region. CEEROPT is optional, but if it is used, code just the runtime options to be changed. Runtime options that are omitted from CEEROPT will remain the same as the system-level defaults (if present) or IBM-supplied defaults. The CEEROPT module resides in a user-specified load library.

For more information about specifying region-level defaults, see *z/OS Language Environment Customization*.

In the CLER CICS transaction

The CICS transaction CLER allows you to display all the current Language Environment runtime options for a region, and to also to modify a subset of these options.

The following runtime options can be modified with the CLER transaction:

- ALL31(ON | OFF)
- CBLPSHPOP(ON | OFF)
- CHECK(ON | OFF)
- HEAPZONES(0-1024,QUIET | MSG | TRACE | ABEND)

© Copyright IBM Corp. 1991, 2015

- INFOMSGFILTER(ON | OFF)
- RPTOPTS(ON | OFF)
- RPTSTG(ON | OFF)
- TERMTHDACT(QUIET | MSG | TRACE | DUMP | UAONLY | UATRACE | UADUMP | UAIMM)
- TRAP(ON | OFF)

Setting RPTOPTS(ON) or RPTSTG(ON) in a production environment can significantly degrade performance. Also, if ALL31(OFF) is set in a production environment, the stack location will be set to BELOW the 16 MB line, which could cause the CICS region to abend due to lack of storage.

The LAST WHERE SET column of the Language Environment runtime options report contains `CICS CLER Trans` for those options that were set by CLER.

Note: CICS TS 3.1 and higher supports XPLINK programs in a CICS environment. The CLER transaction does not affect the runtime options for these programs.

As application defaults

The CEEUOPT assembler language source program sets application defaults using the CEEXOPT macro. The CEEUOPT source program can be edited and assembled to create an object module, CEEUOPT. The CEEUOPT object module must be linked with an application to establish application defaults.

In the assembler user exit

See "CEEBXITA assembler user exit interface" on page 427 for information about how to specify a list of runtime options in the assembler user exit.

For IMS, the UPDATE LE command can be used with the IMS-supplied CEEBXITA exit, DFSBXITA, to allow dynamic overrides for runtime options. For more information about the UPDATE LE command and the IMS-supplied CEEBXITA exit, DFSBXITA, see the IBM Knowledge Center at http://publib.boulder.ibm.com/infocenter/dzichelp/v2r2/index.jsp.

In the storage tuning user exit

The storage tuning user exit can be used to set the Language Environment storage options STACK, LIBSTACK, HEAP, ANYHEAP, and BELOWHEAP. See *z/OS Language Environment Customization* for information about the storage tuning user exit.

Note: Vendor Heap Manager activity is not handled by the Language Environment storage tuning user exit.

In TSO/E commands, on application invocation

You can specify runtime options as options on the CALL command. See "Running your application under TSO/E" on page 91 for more information.

In the _CEE_RUNOPTS environment variable

If you run C applications that are invoked by one of the `exec` family of functions, you can use the environment variable _CEE_RUNOPTS to specify invocation Language Environment runtime options. For more information about using the environment variable _CEE_RUNOPTS, see *z/OS XL C/C++ Programming Guide*.

As JCL

You can specify runtime options in the PARM parameter of the JCL EXEC statement or as a DD card named CEEOPTS. See "Specifying runtime options in the EXEC statement" on page 71 and "Specifying runtime options with the CEEOPTS DD card" on page 70 for details.

In your source code:

C and C++

C provides the `#pragma runopts` directive, with which you can specify runtime options in your source code.

You must specify `#pragma runopts` in the source file that contains your main function, before the first C statement. Only comments and other pragma can precede `#pragma runopts`.

Specify `#pragma runopts` as follows:

Syntax

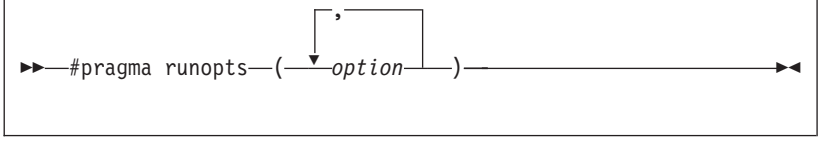

where *option* is a Language Environment runtime option.

For C++ applications, the following values are not allowed for compilation:

- PLIST(xxx)
- ENV(xxx)
- NOEXECOPS
- NOREDIR
- NOARGPARSE

You must use the corresponding z/OS XL C++ compiler options.

For more information about using C/C++ pragma, see *z/OS XL C/C++ User's Guide*.

PL/I Runtime options can be specified in a PL/I source application with the following declaration:

```
DCL PLIXOPT CHAR(length) VAR INIT('string')
            STATIC EXTERNAL;
```

where *string* is a list of options separated by commas or blanks, and *length* is a constant equal to or greater than the length of *string*. Runtime options in PLIXOPT are parsed by the compiler. For Enterprise PL/I for z/OS and PL/I for MVS & VM, the compilers produce the CEEUOPT CSECT for the PLIXOPT string.

If more than one external procedure in a job declares PLIXOPT as STATIC EXTERNAL, only the first link-edited string is available at run time.

If the PLIXOPT string is specified in an OS PL/I main procedure, the options in the string are processed as if specified in the

CEEUOPT CSECT. However, mixing a user-provided CEEUOPT with PLIXOPT is not recommended.

Options specified in the PARM parameter override those specified in the PLIXOPT string.

Order of precedence

It is possible for all the methods listed in "Methods available for specifying runtime options" on page 119 to be used for a given application. The order of precedence (from highest to lowest) between option specification methods is:

1. Storage-related options which are set in the storage tuning user exit.
2. Options specified by the assembler user exit (CEEBXITA).
3. Options specified on invocation of the application:
   - Batch: PARM=prog args/rto (COBOL) or PARM=rto/prog args (non-COBOL).
   - TSO: progname prog args/rto (COBOL) or progname rto/prog args (non-COBOL).
   - z/OS UNIX: Set _CEE_RUNOPTS environment variable. See Passing environment variables to BPXBATCH (*z/OS UNIX System Services User's Guide*) for more information.
   - CEEPIPI: Specified on INIT_SUB, INIT_SUB_DP, or CALL_MAIN. See Chapter 30, "Using preinitialization services," on page 481 for more information.
   - CICS: Runtime options cannot be specified at transaction invocation.
4. Options specified at invocation time through a DD card (DD:CEEOPTS). The CEEOPTS DD is ignored under CICS, SPC, and for programs invoked using one of the exec() family of functions.
5. Options specified in a CEEUOPT CSECT. There are a few methods available to provide a CEEUOPT CSECT:
   - Assemble a CEEUOPT. For more information, see "Creating application-specific runtime option defaults with CEEXOPT" on page 124.
   - Specify the PL/I PLIXOPT declaration within a source program. The compiler generates the CEEUOPT CSECT from the given options.
   - Specify the C/C++ #pragma runopts() directive within a source program. The compiler generates the CEEUOPT CSECT from the given options.

   If you select PLIXOPT or #pragma runopts(), specify it in one and only one compile unit in the application; for example, in the main routine. If multiple CEEUOPTs are present, binder input ordering determines which CEEUOPT is used in an executable program. Only the first CEEUOPT CSECT linked in an executable program is applied. The binder treats any subsequent CEEUOPTs seen in the input as duplicates and they will be ignored.
6. Region-level default options defined within CEEROPT.
7. System-level default options changed after IPL with a SETCEE command.
8. System-level default options changed after IPL with a SET CEE command.
9. System-level default options set in a CEEPRMxx parmlib member and identified during IPL by a CEE=xx statement. This statement can be specified either in the IEASYSyy data set or in the IPL parameters.
10. IBM-supplied defaults.

When the non-overrideable (NONOVR) attribute is specified for a runtime option, all methods of specifying that runtime option with higher precedence are ignored.

Order of precedence examples

Example 1 (non-CICS):

```
IBM-supplied default   STORAGE=((NONE,NONE,NONE,0K),OVR)
CEEPRMxx used at IPL   STORAGE=((00,NONE,NONE,0K),OVR)
CEEUOPT                STORAGE=(,,00,0K)

Used at runtime       STORAGE(00,NONE,00,0K)
```

Example 2 (CICS):

```
IBM-supplied default   STORAGE=((NONE,NONE,NONE,0K),OVR)
CEEROPT                STORAGE=((C1,NONE,NONE,0K),OVR)
CEEUOPT                STORAGE=(C2)

Used at runtime       STORAGE(C2,NONE,NONE,0K)
```

Specifying suboptions in runtime options

Use commas to separate suboptions of runtime options. If you do not specify a suboption, you must still specify the comma to indicate its omission, for example `STACK(,,ANYWHERE,FREE)`. However, trailing commas are not required; `STACK(4K,4K,ANYWHERE)` is valid. If you do not specify any suboptions, either of the following is valid: `STACK` or `STACK()`.

Specifying runtime options and program arguments

To distinguish runtime options from program arguments that are passed to Language Environment, the options and program arguments are separated by a slash (/). For more information about program arguments, see "Argument lists and parameter lists" on page 134.

Runtime options usually precede program arguments whenever they are specified in JCL or on application invocation. The possible combinations are described in Table 16. You can override this format to ensure compatibility with COBOL applications. See "COBOL compatibility considerations" on page 129 for more information.

Table 16. Formats for specifying runtime options and program arguments

When...	Format
Only runtime options are present	runtime options/
Only program arguments are present 1. If a slash is present in the arguments, a preceding slash is mandatory. 2. If a slash is **not** present in the arguments, a preceding slash is optional.	One of the following: 1. /program arguments 2. program arguments ***or*** /program arguments
Both runtime options and program arguments are present	runtime options/program arguments

Use the callable service CEE3PRM and CEE3PR2 to retrieve program arguments (for more information, see *z/OS Language Environment Programming Reference*).

Usage note: Program arguments cannot be passed either by a CEEPRMxx parmlib member or by a CEEOPTS DD statement.

In the following example, an object module called MYPROG is created and run using the cataloged procedure CEEWLG. The code in the example overrides the Language Environment defaults for the RPTOPTS and MSGFILE runtime options.

```
//CEEWLG  JOB
//*
//LINKGO     EXEC CEEWLG,
//    PARM.GO='RPTOPTS(ON),MSGFILE(OPTRPRT)/'
//*
//LKED.SYSIN   DD DSN='userid.MYLIB.OBJLIB(MYPROG)',...DISP=SHR
//GO.OPTRPRT   DD SYSOUT=A
//*
```

Creating application-specific runtime option defaults with CEEXOPT

You can specify a set of application-specific runtime option defaults with the CEEUOPT assembler language source program. When the CEEUOPT source program is assembled, the CEEXOPT macro creates an object module, called CEEUOPT, that can be linked with a program to establish application default options.

The CEE.SCEESAMP data set contains the IBM-supplied sample for the CEEUOPT source program, as shown in Figure 46 on page 125. In the CEEUOPT sample, all runtime options are coded with the IBM-supplied default suboption values. See *z/OS Language Environment Programming Reference* to select the values appropriate for your application.

The options and suboptions specified in CEEUOPT override the defaults, unless the system-level or region-level defaults were set as nonoverridable (NONOVR). Options specified in CEEUOPT cannot be designated as overridable or nonoverridable.

The CEE.SCEESAMP data set also contains CEEWUOPT, which is the sample job used to assemble the CEEUOPT source program to create the CEEUOPT object module in a user-specified library. CEEWUOPT does not use SMP/E to create the CEEUOPT object module, so it can be run several times to create several different CEEUOPT modules, each in its own user-specified library.

```
 CEEUOPT  CSECT
CEEUOPT  AMODE ANY
CEEUOPT  RMODE ANY
         CEEXOPT ABPERC=(NONE),                                          X
               ABTERMENC=(ABEND),                                        X
               AIXBLD=(OFF),                                             X
               ALL31=(ON),                                               X
               ANYHEAP=(16K,8K,ANYWHERE,FREE),                           X
               BELOWHEAP=(8K,4K,FREE),                                   X
               CBLOPTS=(ON),                                             X
               CBLPSHPOP=(ON),                                           X
               CBLQDA=(OFF),                                             X
               CEEDUMP=(60,SYSOUT=*,FREE=END,SPIN=UNALLOC),              X
               CHECK=(ON),                                               X
               COUNTRY=(US),                                             X
               DEBUG=(OFF),                                              X
               DEPTHCONDLMT=(10),                                        X
               DYNDUMP=(*USERID,NODYNAMIC,TDUMP),                        X
               ENVAR(''),                                                X
               ERRCOUNT=(0),                                             X
               ERRUNIT=(6),                                              X
               FILEHIST=(ON),                                            X
               FILETAG=(NOAUTOCVT,NOAUTOTAG),                            X
               HEAP=(32K,32K,ANYWHERE,KEEP,8K,4K),                       X
               HEAPCHK=(OFF,1,0,0,0,1024,0,1024,0),                      X
               HEAPPOOLS=(OFF,8,10,32,10,128,10,256,10,1024,10,2048,     X
               10,0,10,0,10,0,10,0,10,0,10,0,10),                        X
               HEAPZONES=(0,ABEND,0,ABEND),                              X
               INFOMSGFILTER=(OFF,,,,),                                  X
               INQPCOPN=(ON),                                            X
               INTERRUPT=(OFF),                                          X
               LIBSTACK=(4K,4K,FREE),                                    X
               MSGFILE=(SYSOUT,FBA,121,0,NOENQ),                         X
               MSGQ=(15),                                                X
               NATLANG=(ENU),                                            X
               NOAUTOTASK=,                                              X
               NOTEST=(ALL,*,PROMPT,INSPPREF),                           X
               NOUSRHDLR(''),                                            X
               OCSTATUS=(ON),                                            X
               PAGEFRAMESIZE=(4K,4K,4K),                                 X
               PC=(OFF),                                                 X
               PLITASKCOUNT=(20),                                        X
               POSIX=(OFF),                                              X
               PROFILE=(OFF,''),                                         X
               PRTUNIT=(6),                                              X
               PUNUNIT=(7),                                              X
               RDRUNIT=(5),                                              X
               RECPAD=(OFF),                                             X
               RPTOPTS=(OFF),                                            X
               RPTSTG=(OFF),                                             X
               RTEREUS=(OFF),                                            X
               SIMVRD=(OFF),                                             X
               STACK=(128K,128K,ANYWHERE,KEEP,512K,128K),                X
               STORAGE=(NONE,NONE,NONE,0K),                              X
               TERMTHDACT=(TRACE,,96),                                   X
               THREADHEAP=(4K,4K,ANYWHERE,KEEP),                         X
               THREADSTACK=(OFF,4K,4K,ANYWHERE,KEEP,128K,128K),          X
               TRACE=(OFF,4K,DUMP,LE=0),                                 X
               TRAP=(ON,SPIE),                                           X
               UPSI=(00000000),                                          X
               VCTRSAVE=(OFF),                                           X
               XPLINK=(OFF),                                             X
               XUFLOW=(AUTO)
         END
```

Figure 46. Sample Invocation of CEEXOPT within CEEUOPT source program

CEEXOPT invocation for CEEUOPT

To invoke CEEXOPT and create the CEEUOPT object module, follow these steps:

1. Copy member CEEUOPT from CEE.SCEESAMP into CEEWUOPT in place of the comment lines following the SYSIN DD statement.
2. Change the parameters on the CEEXOPT macro statement in CEEUOPT to reflect the values you chose for this application-specific runtime options module.
3. Code just the options you want to change. Options omitted from CEEUOPT remains the same as the defaults.
4. Change `DSNAME=YOURLIB` in the SYSLMOD DD statement to the name of the partitioned data set into which you want your CEEUOPT module to be link-edited.

   Note: If you have a CEEUOPT module in your current data set, it is replaced by the new version.
5. Check the SYSLIB DD statement to ensure that the data set names are correct.

CEEWUOPT should run with a condition code of 0.

CEEXOPT coding guidelines for CEEUOPT

Be aware of the following coding guidelines for the CEEXOPT macro:

- A continuation character (X in the source) must be present in column 72 on each line of the CEEXOPT invocation except the last line.
- Options and suboptions must be specified in uppercase. Only suboptions that are strings can be specified in mixed case or lowercase. For example, both MSGFILE=(SYSOUT) and MSGFILE=(sysout) are acceptable. ALL31=(off) is not acceptable.
- A comma must end each option except for the final option. If the comma is omitted, everything following the option is treated as a comment.
- If one of the string suboptions contains a special character, such as embedded blank or unmatched right or left parenthesis, the string must be enclosed in apostrophes (' '), not in quotation marks (" "). A null string can be specified with either adjacent apostrophes or adjacent quotation marks.

  To get a single apostrophe (') or a single ampersand (&) within a string, two instances of the character must be specified. The pair is counted as only one character in determining if the maximum allowable string length was exceeded, and in setting the effective length of the string.
- Avoid unmatched apostrophes in any string. The error cannot be captured within CEEXOPT itself; instead, the assembler produces a message such as:

  ```
  IEV063  *** ERROR ***  NO ENDING APOSTROPHE
  ```

  which bears no particular relationship to the suboption in which the apostrophe was omitted. Furthermore, none of the options are properly parsed if this mistake is made.
- Macro instruction operands cannot be longer than 1024 characters. If the number of characters to the right of the equal sign is greater than 1024 for any keyword parameter in the CEEXOPT invocation, a return code of 12 is produced for the assembly, and the options are not parsed properly.

- You can completely omit the specification of any runtime option. Options not specified retain the current default values. There are two other methods available for omitting an option, as follows:
  - Specify the option with only a comma following the equal sign, for example:
    ```
    HEAP=,                                                    X
    ```
  - Specify the option with empty parentheses and a comma following the equal sign, for example:
    ```
    HEAP=(),                                                  X
    ```

  In either case, the continuation character (X in this example) must still be present in column 72.
- You can completely omit any suboption of those runtime options which are included. Default values are then supplied for each of the missing suboptions in the options control block that is generated, and these values are ignored at the time Language Environment merges the options. You can use commas to indicate the omission of one or more suboptions for options having more than one suboption. For example, if you want to specify only the second suboption of the STORAGE option, the omission of the 1st, 3rd, and 4th suboptions can be indicated in any of the following ways:
  ```
  STORAGE=(,NONE),                                            X
  STORAGE=(,NONE,),                                           X
  STORAGE=(,NONE,,),                                          X
  ```

  Because suboptions are positional parameters, do not omit the comma if the corresponding suboption is omitted and another suboption follows.
- Options that permit only one suboption do not need to enclose that suboption in parentheses. For example, the COUNTRY option can be specified in either of the following ways:
  ```
  COUNTRY=(US),                                               X
  COUNTRY=US,                                                 X
  ```

Performance considerations

For optimal performance when using CEEUOPT, code only those options that you want to change. This action enhances performance by minimizing the number of options lines that Language Environment must scan. Options and suboptions that are to remain the same as the defaults do not need to be repeated. For example, if the only change you want to make is to define STACK with an initial value of 64K and an increment of 64K, include only that runtime option, as shown in the following example:

```
CEEUOPT CSECT
CEEUOPT AMODE ANY
CEEUOPT RMODE ANY
        CEEXOPT STACK=(64K,64K)
   END
```

Using the CEEOPTS DD statement

Language Environment allows you to provide additional invocation-level runtime options using the CEEOPTS DD statement. The CEEOPTS DD can refer to an in-stream data set, regular sequential data set, or a member of a regular or extended partitioned data set. If specified, the data set must be available during initialization of the enclave so the options can be merged. To specify the CEEOPTS DD statement, use the following syntax, as appropriate.

Situation	Syntax to use
For in-stream JCL	`//CEEOPTS DD *` `ALL31(OFF),STACK(,,BELOW)`
For a sequential data set	`//CEEOPTS DD DSN=MY.CEEOPTS.DATASET,DISP=SHR`
For a partitioned data set	`//CEEOPTS DD DSN=MY.CEEOPTS.DATASET(MYOPTS),` `// DISP=SHR`
To ignore the DD statement	`//CEEOPTS DD DUMMY`

Before using the CEEOPTS DD statement, review the following restrictions:

1. The CEEOPTS DD supports only DASD data sets that can be read with QSAM. An informational message is issued when an unsupported data set type is used.
2. Only the first 3K (excluding comment lines) of the CEEOPTS file are read. All other information is ignored.
3. The file must be in fixed-block or fixed format. Variable block format is not supported.
4. The CEEOPTS DD is ignored under CICS, SPC, and for an exec()ed program.
5. Language Environment cannot use a CEEOPTS DDNAME dynamically allocated with the XTIOT, UCB nocapture, or DSAB-above-the-line options specified in the SVC99 parameters (S99TIOEX, S99ACUCB, S99DSABA flags).

As Figure 47 shows, the syntax of the runtime options within the CEEOPTS DD statement is similar to the syntax used on the JCL PARM= parameter or under TSO.

- Each record in the CEEOPTS DD is concatenated to form one options string. No implicit space is added between lines.
- Options must be separated by commas or blanks and can span multiple lines.
- A trailing slash (/) is not valid to denote the end of the options string.
- Input lines that begin with an asterisk (*) in column 1 are treated as comments and ignored.
- The last 8 columns of each record are treated as sequential information and ignored.

```
****** **** TOP OF FILE ***
000001 * This line is a comment
000002 ALL31(OFF),STACK(,,BELOW)
000003 TRAP(ON,
000004   NOSPIE
000005 * This line is a comment within an option
000006 ),TERMTHDACT(
000007 UAIMM,
000008 CICSDDS,96)
****** *** END OF DATA ***
```

Figure 47. Example syntax for the CEEOPTS DD statement

The Language Environment runtime options report identifies the options merged from the CEEOPTS DD source by using `DD:CEEOPTS` as an indicator. For an example of the options report, see *z/OS Language Environment Debugging Guide*.

Runtime compatibility considerations

This topic discusses runtime compatibility considerations for C and C++, COBOL, Fortran, PL/I, and IMS.

C and C++ compatibility considerations

C provides the `#pragma runopts` directive for you to specify runtime options in your source code. When `#pragma runopts(execops)` is in effect (the default), you can pass runtime options from the command line. Runtime options must be followed by a slash (/).

If the main routine is C and `#pragma runopts(noexecops)` is specified in the source, you cannot enter runtime options on the command line. Language Environment interprets the entire string on the command line including runtime options, if present, as program arguments to the main routine.

For a C++ application, the following values are not allowed for compilation:
- PLIST(xxx)
- ENV(xxx)
- NOEXECOPS
- NOREDIR
- NOARGPARSE

You must use z/OS XL C++ compiler options to achieve the same effect that was achieved using C runtime options.

See *z/OS Language Environment Programming Reference* for a description of the EXECOPS runtime option.

COBOL compatibility considerations

With OS/VS COBOL and VS COBOL II, you must use the following format when specifying the runtime options list:

```
program arguments / runtime options
```

This format is the opposite of the Language Environment-defined format. To ensure compatibility with COBOL, Language Environment provides the runtime option CBLOPTS. With it, you can choose if runtime options or program arguments are expected first in the parameter list. CBLOPTS can only be specified at the system level, region level, or in a CEEUOPT CSECT. You can specify a slash (/) as part of the program arguments with CBLOPTS(ON) or CBLOPTS(OFF).

CBLOPTS(ON) allows the existing COBOL format of the invocation character string to continue working (program arguments followed by runtime options). When CBLOPTS(ON) is specified, the last slash in a string delineates the program arguments from the runtime options. Anything before the last slash is interpreted as a program argument.

If there are only invalid runtime options, then the entire string is interpreted as a program argument. For example, if you pass the string 11/16/1967, 1967 is interpreted as an invalid runtime option. Since there are no other runtime options, the entire string is interpreted as a program argument.

Conversely, when CBLOPTS(OFF) is specified, the first slash delineates the runtime options from the program arguments. Anything after the first slash is interpreted

as a program argument. CBLOPTS is honored **only** when a COBOL program is the main routine in the application. For example, if the main routine is C, Language Environment does not honor CBLOPTS. See *z/OS Language Environment Programming Reference* for more information.

For non-CICS, ensure that COBOL transactions are not link-edited with IGZETUN, which is not supported and which causes an informational message to be logged.

For CICS, ensure that COBOL transactions are not link-edited with IGZEOPT and IGZETUN, which are not supported and which cause an informational message to be logged.

Logging this message for each application inhibits performance.

Fortran compatibility considerations

Under VS FORTRAN Version 2, a slash (/) is not required after runtime options if only runtime options are passed. With Language Environment, however, a slash following runtime options is mandatory. Therefore, you must check your invocation string to ensure the presence of a slash after the runtime options.

There are some differences between Fortran and Language Environment runtime options. While most of these differences are automatically mapped, some options need to be coded in a different format under Language Environment. In addition, there are other Fortran runtime options that are not available under Language Environment. See *z/OS Language Environment Programming Reference* for the mapping of Fortran to Language Environment runtime options.

If the runtime options string includes an unrecognized option or suboption, Language Environment prints an informational message to help you identify the source of the error.

You can use the Fortran ARGSTR subroutine to retrieve any user-supplied program arguments from the command line. ARGSTR can be used from your Fortran program to identify the program arguments that were given when the enclave was invoked. For information about using ARGSTR in a Fortran program, see *VS FORTRAN Version 2 Language and Library Reference*.

PL/I compatibility considerations

Under OS PL/I, a slash (/) is not required after runtime options if the runtime options are the only ones passed. With Language Environment, however, a slash is mandatory. Therefore, you must check your invocation string to ensure the presence of a slash after the runtime options.

If a PL/I main program is compiled with the NOEXECOPS option, runtime options cannot be specified in the MVS PARM statement. If runtime options are specified, they are passed as program arguments. The effect of the NOEXECOPS option is described in Appendix D, “Operating system and subsystem parameter list formats,” on page 563.

IMS compatibility considerations

You cannot pass runtime options as CEETDLI arguments, nor can you alter the settings of runtime options when invoking IMS facilities. For more information about using the CEETDLI interface, see “Using the interface between Language Environment and IMS” on page 415.

Part 2. Preparing an application to run with Language Environment

Running an application is generally the same under Language Environment as in earlier versions of a language's run time. However, to take advantage of some of the features that a common execution environment offers, you must consider a number of different things when preparing an application to run in Language Environment.

When running applications in Language Environment, you must consider the target operating system. Under batch, TSO/E, CICS, and IMS, the way that parameters are passed differs. To ensure consistency, Language Environment standardizes the parameters as much as possible. It is therefore important for you to know what Language Environment does to the format to ensure this consistency. Information about parameter list formats is in Chapter 10, "Using Language Environment parameter list formats," on page 133 and Appendix D, "Operating system and subsystem parameter list formats," on page 563.

In addition to describing parameter list formats, this section describes how to manage return codes and offers suggestions on how to make your Language Environment-conforming applications reentrant.

© Copyright IBM Corp. 1991, 2015

Chapter 10. Using Language Environment parameter list formats

This topic describes how to pass parameters to external routines under Language Environment. The methods described do not apply to internal routines or to compiled code that invokes its own library routines. Each Language Environment-conforming HLL might have its own method for transferring control and passing arguments between internal routines.

When writing a Language Environment-conforming application, it is important to consider how parameters are passed to the application on invocation. The type of parameter list created by the operating system and passed to Language Environment when an application is run varies according to the operating system or subsystem used. Language Environment repackages the various formats so that what is actually passed to the main routine when it is invoked on most supported operating systems is a halfword prefixed character string. In C and C++, you can pass arguments to the main routine through `argv` and `argc`. If you set up your C, C++, COBOL, or PL/I main routine according to the rules of the language, you generally do not need to do anything special to receive parameters from the operating system.

Fortran does not support passing parameters to a main routine.

On operating subsystems such as CICS and IMS, however, the parameter format that is passed might be different from what your main routine expects. In these cases, you must explicitly code your main routine to accept the format of the parameters as they are passed by CICS and IMS.

"Preparing your main routine to receive parameters" on page 136 contains examples of how to code your main routine to receive parameters under any supported operating system or subsystem.

Additionally, some HLLs, such as C, C++, and PL/I, provide options that enable you to specify the format of the parameter list you expect to be passed to your main routine. For example, C programmers can specify the PLIST runtime option, which determines the parameter list format. If your HLL provides such an option, refer to one of the following for information about which settings you should select to run an application:

TSO/E Table 19 on page 136
IMS Table 20 on page 138
CICS Table 21 on page 138
MVS Table 22 on page 139

When running most main routines, you do not need to explicitly access the parameter list. Language Environment provides the CEE3PRM and CEE3PR2 callable service to query and return to your calling routine the parameter string passed to your main routine when it was invoked. The returned parameter string contains only program arguments. If no program arguments were specified, a blank string is returned. See *z/OS Language Environment Programming Reference* for more information about CEE3PRM and CEE3PR2.

© Copyright IBM Corp. 1991, 2015

In addition, some HLLs, such as C and C++, provide ways of identifying passed parameters to your main routine using constructs within the HLL itself. For more information, see "C and C++ parameter passing considerations" on page 563.

Argument lists and parameter lists

The terminology used to describe passing parameters to and from routines currently differs among Language Environment-conforming HLLs. Figure 48 summarizes the terminology used with Language Environment. In Figure 48, a calling routine passes an *argument list* to a called routine. That same list is referred to as a *parameter list* when it is received by the called routine. Under Language Environment, the formats of the argument and parameter lists are identical. The only difference between the two terms is whether they are being used from the point of view of the calling or the called routine.

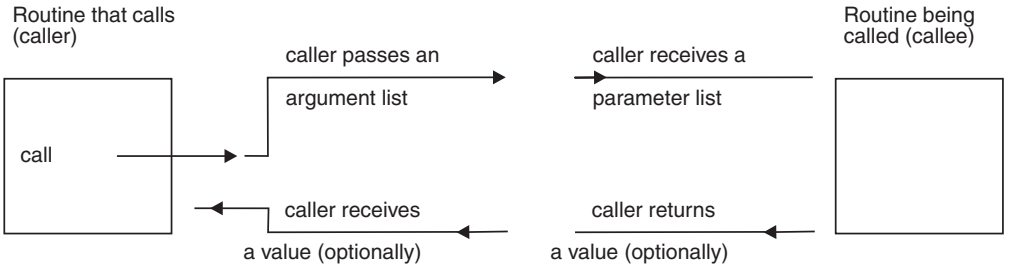

Figure 48. Call terminology refresher

Passing arguments between routines

Language Environment-conforming HLLs use the semantic terms *by value* and *by reference* to indicate how changes in the argument values for a called routine affect the calling routine:

By value
Any changes made to the argument value by the called routine will not alter the original argument passed by the calling routine.

By reference
Changes made by the called routine to the argument value can alter the original argument value passed by the calling routine.

Under Language Environment you can pass arguments directly and indirectly as follows:

Direct The value of the argument is passed directly in the parameter list. You cannot pass an argument by reference (direct).

Indirect
A pointer to the argument value is passed in the parameter list.

Table 17 on page 135 summarizes the semantic terms by value and by reference and the direct and indirect methods for passing arguments. The table shows what is passed to routines.

Table 17. Semantic terms and methods for passing arguments in Language Environment

	By value	By reference
Direct	The value of the object is passed	Not allowed under Language Environment
Indirect	A pointer points to the value of an object	A pointer points to the object

Figure 49 illustrates these argument passing styles. In Figure 49, register 1 (R1) points to the value of an object, or to an argument list containing either a pointer to the value of an object or a pointer to the object.

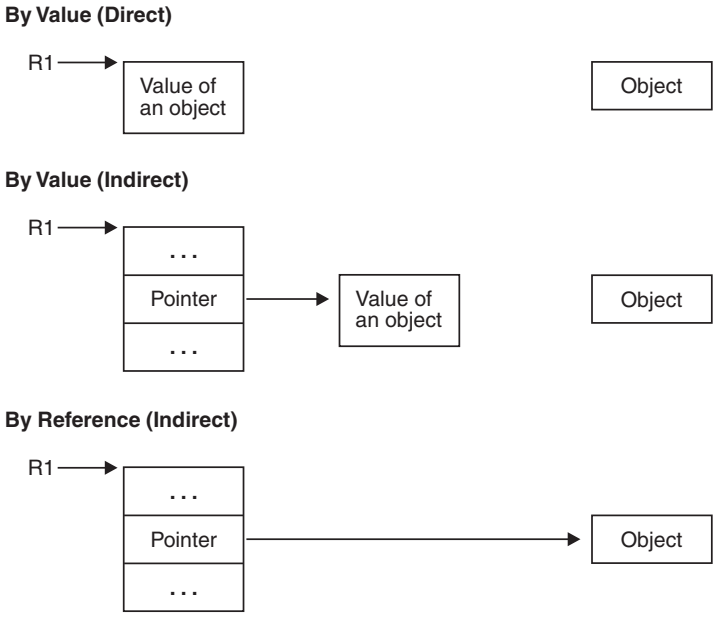

Figure 49. Argument passing styles in Language Environment

HLL semantics usually determine when data is passed by value or by reference. Language Environment supports argument passing styles as shown in Table 18.

Table 18. Default passing style per HLL

Language	Default argument
C (including XPLINK). See note 4.	By Value (Direct)
C++ (including XPLINK). See note 4.	By Value (Direct). See note 1.
COBOL	By Reference (Indirect) (COBOL BY REFERENCE). See note 2.
Fortran	By Reference (Indirect)
PL/I	By Reference (Indirect). See note 3.

Table 18. Default passing style per HLL (continued)

Language	Default argument

Notes:

1. C++ also supports by reference (indirect), if a prototype specifies it with an ampersand (&).
2. Other parameter passing styles supported are:
   - By value (Indirect) (COBOL BY CONTENT) by Enterprise COBOL for z/OS, COBOL for OS/390 & VM, COBOL for MVS & VM, COBOL/370, and VS COBOL II
   - By value (Direct) (COBOL BY VALUE) by Enterprise COBOL for z/OS, COBOL for OS/390 & VM, and COBOL for MVS & VM
3. However, when SYSTEM(CICS) or SYSTEM(IMS) is specified, Enterprise PL/I for z/OS and PL/I for MVS & VM main procedures assume by value (direct) for parameters (OS PL/I main procedures continue to assume by reference (indirect)). (See "PL/I argument passing considerations" on page 140 for a discussion of OPTIONS(BYVALUE).)

   PL/I and Fortran also support *by value* (indirect) (also known as *by content*), which you can obtain by passing an argument in parentheses, for example, `A` in `CALL X((A), B)`.
4. XPLINK-compiled functions pass arguments *by value* by default. However it will pass as many arguments in registers as possible in order to reduce the call linkage overhead. See *z/OS Language Environment Vendor Interfaces* for additional information.

Preparing your main routine to receive parameters

When coding a main routine to receive a parameter list from the operating system, consider the following items:

- The HLL in which your main routine is written

  HLL semantics determine how you code your main routine in order to receive a parameter list.
- The method of main routine invocation

  You should consider the environment (MVS, TSO, IMS, CICS) in which your main routine is invoked, as well as the commands used to invoke it.
- The compiler or runtime options that you must specify

  The settings of the C PLIST runtime option, the C++ PLIST compiler option, or the PL/I SYSTEM compiler option that you must specify are based on:
  - The operating system or subsystem where you invoke your main routine
  - The commands you use to invoke your main routine

The following tables summarize options to consider when preparing a main routine to receive parameters in each system or subsystem; the tables also provide sample coding for each HLL:

TSO/E Table 19
IMS Table 20 on page 138
CICS Table 21 on page 138
MVS Table 22 on page 139

Table 19. Coding a main routine to receive an inbound parameter list in TSO/E

Language	Recommended options setting	Sample main routine code

C or C++ (See note 1.)	In C, specify PLIST(HOST) runtime option; if not specified, PLIST(HOST) is on by default. Under C++, this is the default behavior; do not specify a PLIST compiler option setting.	`main(int argc, char * argv[])`
		`{`
		`⋮`
		`}`

Table 19. Coding a main routine to receive an inbound parameter list in TSO/E (continued)

Language	Recommended options setting	Sample main routine code

C or C++ (See note 2.)	In C, PLIST(HOST) is the default; PLIST(TSO) is supported for compatibility and acts the same as PLIST(HOST). `argc` and `argv` are set from the command buffer. In C++, this is the behavior by default.
	
	To see the TSO CPPL, specify PLIST(OS) and access the CPPL through `__osplist`. In C++, you must specify the PLIST(OS) compiler option.
		For PLIST(HOST) behavior, see above.
		
		The following code is a sample that accesses the TSO CPPL:
		`#include <stdlib.h>`
		`typedef struct CPPL_STRUCT {`
		`  void * CPPLCBUF;`
		`  void * CPPLUPT;`
		`  void * CPPLPSCB;`
		`  void * CPPLECT;`
		`} CPPL;`
		`main()`
		`{`
		`  CPPL *cppl_ptr;`
		
		`  cppl_ptr = __osplist;`
		`⋮`
		`}`

COBOL (See note 1.)	No specific options required.	`IDENTIFICATION DIVISION.`
		`⋮`
		`DATA DIVISION.`
		`⋮`
		`LINKAGE SECTION.`
		` 01 PARMDATA.`
		`  02 STRINGLEN  PIC 9(4) USAGE IS BINARY.`
		`  02 STR.`
		`  03 PARM-BYTE  PIC X OCCURS 0 TO 100`
		`  DEPENDING ON STRINGLEN.`
		`⋮`
		`PROCEDURE DIVISION USING PARMDATA.`
		`⋮`

COBOL (See note 2.)	No specific options required.	Same as above.

PL/I (See note 1.)	Specify SYSTEM(MVS) compiler option.	`*PROCESS SYSTEM(xxx);`
		` MYMAIN: PROC (A) OPTIONS (MAIN);`
		
		`  DCL  A CHAR(100) VARYING;`
		`⋮`

PL/I (See note 2.)	Specify SYSTEM(TSO) compiler option.	`*PROCESS SYSTEM(TSO);`
		` MYMAIN: PROC (CPPLPTR) OPTIONS (MAIN);`
		
		`  /*Pointer to CPPL*/`
		`  DCL  CPPLPTR POINTER;`
		
		`  DCL  1 CPPL based (CPPLPTR),`
		`  /*Command buffer*/`
		`  2 CPPLCBUF POINTER,`
		`  /*User profile table*/`
		`  2 CPPLUPT  POINTER,`
		`  /*Protected step ctl blk*/`
		`  2 CPPLPSCB POINTER,`
		`  /*Environment ctl blk*/`
		`  2 CPPLECT  POINTER;`
		`⋮`

Method of invocation:

1. Use the LOADGO command or the CALL command.
2. Use the TSO Command Processor.

Table 20. Coding a main routine to receive an inbound parameter list in IMS

Language	Recommended options setting	Sample main routine code

C	Specify PLIST(OS) and ENV(IMS) runtime option.	`#pragma runopts(env(ims),plist(os))`
		`#include <ims.h>`
		`typedef struct {PCB_STRUCT(10)} PCB_10_TYPE;`
		`main()`
		`{`
		`  PCB_STRUCT_8_TYPE *alt_pcb;`
		`  PCB_10_TYPE *db_pcb;`
		`  IO_PCB_TYPE *io_pcb;`
		`.`
		`.`
		`.`
		`}`

C++	Specify PLIST(OS) and TARGET(IMS) compiler option.	`#include <ims.h>`
		`typedef struct {PCB_STRUCT(10)} PCB_10_TYPE;`
		`main()`
		`{`
		`  PCB_STRUCT_8_TYPE *alt_pcb;`
		`  PCB_10_TYPE *db_pcb;`
		`  IO_PCB_TYPE *io_pcb;`
		`.`
		`.`
		`.`
		`}`

COBOL	No specific options required.	`IDENTIFICATION DIVISION.`
		`PROGRAM-ID. DLITCBL.`
		`DATA DIVISION.`
		`.`
		`.`
		`.`
		`  LINKAGE SECTION.`
		`  01 PCB1.`
		`  02 ... .`
		`  01 PCB2.`
		`  02 ... .`
		`.`
		`.`
		`.`
		`PROCEDURE DIVISION USING PCB1, PCB2.`
		`.`
		`.`
		`.`

PL/I	Specify SYSTEM(IMS) compiler option.	`*PROCESS SYSTEM(IMS);`
		`MYMAIN: PROC (X,Y,Z) OPTIONS(MAIN);`
		
		`  DCL (X,Y,Z) POINTER;`
		`  DCL 1 PCB based (X),`
		`.`
		`.`
		`.`

Table 21. Coding a main routine to receive an inbound parameter list in CICS

Language	Recommended options setting	Sample main routine code

C or C++	Do not specify any PLIST option. `argc` = 1 and `argv[0]` = transaction id.	`main(int argc,char *argv[])`
		`{`
		`.`
		`.`
		`.`
		`}`

Table 21. Coding a main routine to receive an inbound parameter list in CICS (continued)

Language	Recommended options setting	Sample main routine code

COBOL	No specific options required.	`IDENTIFICATION DIVISION.`
		`⋮`
		`DATA DIVISION.`
		`⋮`
		`  LINKAGE SECTION.`
		`  01  DFHEIBLK.`
		`⋮`
		`  01  DFHCOMMAREA.`
		`⋮`
		`PROCEDURE DIVISION USING DFHEIBLK`
		`  DFHCOMMAREA.`
		`⋮`

PL/I	Specify SYSTEM(CICS) compiler option.	`*PROCESS SYSTEM(CICS);`
		` MYMAIN: PROC (DFHEIPTR, DFHCOMMAREAPTR_PTR)`
		`  OPTIONS(MAIN);`
		
		`  /*pointer to EIB*/`
		`  /*supplied by CICS translator*/`
		`  DCL DFHEIPTR POINTER;`
		`  /*pointer to commarea*/`
		`  DCL DFHCOMMAREAPTR_PTR POINTER;`
		`⋮`

Table 22. Coding a main routine to receive an inbound parameter list in MVS. Method of invocation: Assembler passing an arbitrary parameter list that Language Environment is not to interpret.

Language	Recommended options setting	Sample main routine code

C or C++	In C, specify PLIST(OS) runtime option.
	
	In C++, specify PLIST(OS) compiler option.
		`main()`
		`{ access register 1 through __osplist;`
		`⋮`
		`  }`

COBOL	No specific options required.	`IDENTIFICATION DIVISION.`
		`⋮`
		`DATA DIVISION.`
		`⋮`
		`  LINKAGE SECTION.`
		`  01 PARM1...`
		`  01 PARM2...`
		`⋮`
		`PROCEDURE DIVISION USING PARM1, PARM2.`
		`⋮`

PL/I	Specify SYSTEM(MVS) and NOEXECOPS procedure option.	`*PROCESS SYSTEM(MVS);`
		` MYMAIN: PROC (PARM1,PARM2,...)`
		`  OPTIONS (MAIN NOEXECOPS);`
		
		`  DCL PARM1...`
		
		`  DCL PARM2...`
		`⋮`

PL/I argument passing considerations

The PL/I OPTIONS option of both the PROCEDURE statement and ENTRY declaration permits you to specify the mutually exclusive options BYVALUE and BYADDR.

OPTIONS(BYVALUE)
Specifies that the PL/I procedure expects arguments to be passed to it by value (direct). OPTIONS(BYVALUE) can be specified for external PROCEDURE statements and ENTRY declarations. It applies to all arguments and argument descriptors.

OPTIONS(BYADDR)
Specifies that the PL/I procedure expects arguments to be passed to it by reference (indirect) or by value (indirect). OPTIONS(BYADDR) can be specified for external PROCEDURE statements and for ENTRY declarations. It applies to all arguments and argument descriptors.

OPTIONS(BYVALUE) cannot be specified for the following constructs:

- ENTRY statements:

```
ENTRY(N) OPTIONS(BYVALUE);                    /* invalid */
```

- Declaration of a parameter:

```
PROC(ARG1);
DCL ARG1 FIXED BIN(31) BYVALUE;               /* invalid */
```

- Parameter descriptor in an ENTRY declaration:

```
DCL T ENTRY(FIXED BIN(31) BYVALUE) EXTERNAL;  /* invalid */
```

All parameters, parameter descriptors, or return values must be specified with either the POINTER or FIXED BIN(31) data type. Return values are passed back in register 15.

OPTIONS(BYADDR) is the default unless the external procedure specifies OPTIONS(MAIN) and is compiled with the SYSTEM(CICS) or SYSTEM(IMS) compiler option. In this case, OPTIONS(BYVALUE) is the default. In general, you should specify OPTIONS(BYVALUE) only for a main procedure with a SYSTEM option of IMS or CICS. If you specify OPTIONS(BYVALUE) for a main procedure with other system options, the parameter list is passed to the main procedure as is.

OPTIONS(BYVALUE) for a main procedure implies OPTIONS(NOEXECOPS).

PL/I does not support calls to routines that modify the body of an indirect argument list built by PL/I compiled code.

Chapter 11. Making your application reentrant

This topic shows you how to make your application reentrant. *Reentrancy* allows more than one user to share a single copy of a load module. If your application is not reentrant, each application that calls your application must load a separate copy of your application.

The following routines must be reentrant:
- Routines to be loaded into the LPA or ELPA
- Routines to be used with CICS
- Routines to be preloaded with IMS

Your routine should be reentrant if it is a large routine that is likely to have multiple concurrent users. Less storage is used if multiple users share the routine concurrently. Reentrancy also offers some performance enhancement because there is less paging to auxiliary storage.

If you want your routine to be reentrant, ensure that it does not alter any static storage that is part of the executable program; if the static storage is altered, the routine is not reentrant and its results are unpredictable.

Making your C/C++ program reentrant

Under C/C++, reentrant programs can be categorized by their reentrancy type as follows:

Natural reentrancy
The attribute of programs that contain no modifiable external data.

Natural reentrancy is not applicable to C++.

Constructed reentrancy
The attribute of applications that contain modifiable external data and require additional processing to become reentrant. By default, all C++ programs are made reentrant via constructed reentrancy.

Natural reentrancy

A C program is naturally reentrant if it contains no modifiable external data. In C, the following are considered modifiable external data:
- Variables using the `extern` storage class
- Variables using the `static` storage class
- Writable strings

If your C program is naturally reentrant, you do not need to use the RENT compiler option. After compiling and binding, install it in one of the locations listed in “Installing a reentrant load module” on page 143.

Constructed reentrancy

A constructed reentrant program is created by using either of the following methods:

- Use the binder to combine all of the object modules produced by the z/OS XL C/C++ compiler when the target data set is a PDSE or HFS.

© Copyright IBM Corp. 1991, 2015

- Use the prelinker to combine all of the object modules produced by the z/OS XL C/C++ compiler and pass the output to the binder when the target data set is a PDS. For more information about the prelinker see Appendix A, "Prelinking an application," on page 539.

The compile-time initialization information from one or more object modules is combined into a single initialization unit.

Programs with constructed reentrancy are split into two parts:
- A variable or nonreentrant part that contains external data
- A constant or reentrant part that contains executable code and constant data

Each user running the program receives a private copy of the first part (mapped by either the binder or the prelinker), which is initialized at run time. The second part can be shared across multiple spaces or sessions only if it is installed in the link pack area (LPA) or extended link pack area (ELPA).

Generating a reentrant program executable for C or C++

To generate a reentrant C object module, follow these steps:

1. For C, if your program contains external data, compile your source files using the RENT compiler option. For C++, compile your source files; by default the compiler builds reentrant programs using constructed reentrancy. See *z/OS XL C/C++ User's Guide* for more information.
2. To produce an executable program:
   - If the target data set is a PDSE or HFS, use the binder to combine all of the input into an executable program
   - If the target data set is a PDS, use the prelinker to combine all of the input before passing it as input to the binder. You cannot run an object module through the prelinker more than once. Also, you must link-edit using the same platform you used for the prelink step.
3. To get the greatest benefit from reentrancy, install your executable program in one of the locations listed in "Installing a reentrant load module" on page 143.

Making your COBOL program reentrant

If you intend to have multiple users execute a COBOL program concurrently, make it reentrant by using the RENT compiler option. For information about specifying the RENT compiler option, see the appropriate version of the COBOL programming guide in the COBOL library at Enterprise COBOL for z/OS library (http://www-01.ibm.com/support/docview.wss?uid=swg27036733).

Making your Fortran program reentrant

If you intend to have multiple users execute a Fortran program concurrently, make it reentrant by using the RENT compiler option. The object module produced by the compiler must then be separated into its nonshareable and shareable parts using the reentrancy separation tool.

The Fortran reentrancy separation tool is delivered under Language Environment, and with the exception of its name and the names of the cataloged procedures used to invoke it, its use and operation are the same as with the reentrancy separation tool provided by VS FORTRAN Version 2.

Table 23. Fortran reentrancy separation tool and Language Environment cataloged procedures

Fortran Member name	Language Environment member name	Content
AFBVSFST	AFHXFSTA	Fortran reentrancy separation tool
None	AFHWRL	Cataloged procedure to separate the nonshareable and shareable parts of an object module, and link-edit
VFT2RLG	AFHWRLG	Cataloged procedure to separate the nonshareable and shareable parts of an object module, link-edit, and execute

The Fortran reentrancy separation tool is a member of the CEE.SCEERUN data set. The Fortran reentrancy separation tool cataloged procedures are members of the CEE.SCEEPROC data set.

It is important to note that Fortran products from VS FORTRAN Version 1 Release 4 on produce reentrant object code; however, mixing Fortran object code with another HLL's object code can cause the other HLL's load module to become nonreentrant. This is due to the mechanism that Fortran uses to produce reentrant code.

For more information about creating reentrant Fortran programs, see *VS FORTRAN Version 2 Programming Guide for CMS and MVS*.

Making your PL/I program reentrant

If you intend to have multiple users execute a PL/I program at the same time, make it reentrant by specifying the REENTRANT procedure option when you compile. For information about specifying the REENTRANT procedure option, see *PL/I for MVS & VM Language Reference*.

Installing a reentrant load module

You will get the most benefit from reentrancy if you link the program with the RENT attribute and any other attributes you would normally use, and have your system programmer install the load module in the link pack area (LPA) or the extended link pack area (ELPA) of the system.

Installing a module in the LPA, ELPA or saved segment requires an initial program load (IPL) of your operating system. You can use the SET PROG=*xx* console command to add or remove modules from dynamic LPA.

Part 3. Language Environment concepts, services, and models

This section provides more information about Language Environment and the services it provides.

© Copyright IBM Corp. 1991, 2015

Chapter 12. Initialization and termination under Language Environment

This topic describes initialization and termination under Language Environment. It describes how you can customize your applications during initialization and termination by using Language Environment runtime options, callable services, and user exits. It includes instructions on how to use return and abend codes to respond to initialization and termination actions, as well as to conditions that remain unhandled.

The basics of initialization and termination

Initialization and termination establish the state of various parts of the Language Environment program management model that supports multilanguage applications. The program management model describes three major entities of a program structure:

Process
A collection of resources (code and data).

Enclave
A collection of program units consisting of at least one main routine.

Thread
The basic unit of execution.

The z/OS UNIX System Services (z/OS UNIX) program management model differs somewhat from the Language Environment program management model. Refer to "Mapping the POSIX program management model to the Language Environment program management model" on page 166 for more information. For more detailed definitions of program management and other Language Environment terms, see Chapter 13, "Program management model," on page 161.

When you run a routine, Language Environment initializes the runtime environment by creating a process, an enclave, and an initial thread. You can modify initialization by running a user exit, written either in assembler or in an HLL.

During termination, threads (either single or multiple, depending on whether your application is POSIX-conforming), enclaves, and processes are terminated. Through the runtime options of Language Environment and callable services for termination, you can control how a thread, enclave, or process terminates. For example, you can control whether an abend or a return code is generated from an application that terminates with an unhandled condition of severity 2 or greater. See "Termination behavior for unhandled conditions" on page 156.

Related runtime options:

ABTERMENC
Specifies whether an enclave terminates with an abend or with a return code and a reason code when there is an unhandled condition of severity 2 or greater

TERMTHDACT
Specifies the level of information that you want to receive after an unhandled condition of severity 2 or greater causes a thread to terminate

© Copyright IBM Corp. 1991, 2015

Related callable services:

CEE3ABD
Terminates an enclave with or without clean-up and the value of clean-up specifies which dumps to take during termination.

CEE3AB2
Terminates an enclave with or without clean-up, whose value specifies which dumps to take during termination, and a user specified reason code.

CEE3GRC
Returns the user enclave return code to your routine. Along with CEE3SRC, it allows you to use return code-based programming techniques.

CEE3PRM
Returns to your routine the parameter string specified when your application was invoked. Use CEE3PR2 for parameter strings greater than 80 characters.

CEE3PR2
Returns to the calling routine the argument string and its associated length, specified at program invocation.

CEE3SRC
Sets the user enclave return code, which is used to calculate the final enclave return code at termination

Related user exits:

CEEBXITA
An assembler user exit for enclave initialization, and enclave and process termination

CEEBINT
An HLL user exit (written in C, C++ (with C linkage), Enterprise PL/I for z/OS or PL/I for MVS & VM, or Language Environment-conforming assembler) called at enclave initialization

See Chapter 28, “Using runtime user exits,” on page 421 for more information about user exits.

Preinitialization interface:

CEEPIPI
CEEPIPI performs various initialization functions

See Chapter 30, “Using preinitialization services,” on page 481 for more information about the preinitialization interface.

See *z/OS Language Environment Programming Reference* for syntax information about runtime options and callable services.

Language Environment initialization

During initialization, a process, an enclave, and then an initial thread are created. You can affect initialization at the enclave level, by using either the assembler or HLL user exits.

Process initialization sets up the framework to manage enclaves and initializes resources that can be shared among enclaves. Enclave initialization creates the framework to manage enclave-related resources and the threads that run within the enclave. Thread initialization acquires a stack and enables the condition manager for the thread.

What happens during initialization

When you run an application under Language Environment, the following sequence of events occurs:

1. Language Environment runs the assembler user exit CEEBXITA.

   CEEBXITA runs before initialization of the enclave.

   You cannot code the CEEBXITA assembler user exit as an XPLINK application. However, since CEEBXITA is called directly by Language Environment and not by the application, a non-XPLINK CEEBXITA can be statically bound in the same program object with an XPLINK application.

   You can modify the environment in which your application runs by:
   - Specifying certain runtime options
   - Allocating data sets and files
   - Listing abend codes to be passed to the operating system
   - Checking the values of program arguments

   IBM provides a default version of CEEBXITA and several samples you can use to customize your application to perform tasks such as enforcing a set of runtime options for a particular environment. Because CEEBXITA runs before any HLLs have been established, it is written in assembler language so that it can establish parameters such as stack size and trap settings for the HLLs.

   CEEBXITA can function as application-specific or installation-wide. If you customize CEEBXITA to do application-specific processing (for example, dynamically allocating files needed by your application), you must link the exit with the application load module. (Conversely, installation-wide user exits must be linked with the Language Environment initialization library routines.)

   An application-specific user exit has priority over an installation-wide exit, so you can customize a user exit for a particular application without affecting the installation default version.

   For more information about the function and location of the CEEBXITA user exit, see Chapter 28, "Using runtime user exits," on page 421.

2. Language Environment examines the load module and initializes all languages identified in the application.

   Under Language Environment, an interlanguage communication (ILC) application works as shown in Figure 50. Language Environment will also examine the load module and initialize an XPLINK environment (forcing the XPLINK(ON) runtime option) if the initial program was compiled with the XPLINK option. Because all the language conventions are already established and do not need to be initialized and terminated between calls to other routines, the processing is significantly faster when using Language Environment-conforming HLLs.

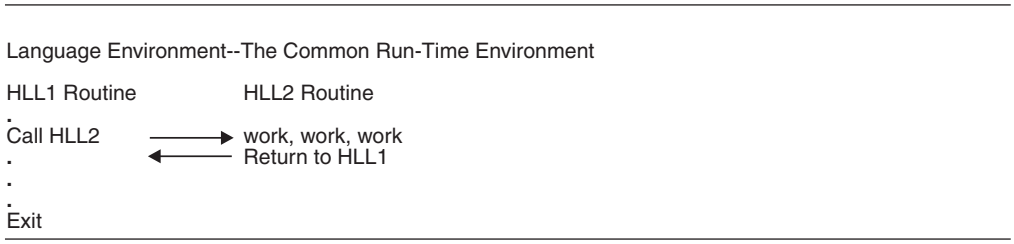

Figure 50. Language Environment ILC — only one runtime environment to initialize

Performance consideration: Language Environment initializes all languages included in an application, regardless of whether all of them are used. To optimize performance, include only those languages your application actually uses.

3. Language Environment runs the HLL user exit CEEBINT.

   CEEBINT lets you perform tasks such as recording accounting statistics or calling other user exits. You cannot code CEEBINT as an XPLINK application. However, since CEEBINT is called directly by Language Environment and not the application, a non-XPLINK CEEBINT can be statically bound in the same program object with an XPLINK application. You can write a customized version of CEEBINT in any Language Environment-conforming language except COBOL. COBOL applications can, however, use CEEBINT written in another language.

   IBM provides an object module default version of CEEBINT that consists of an immediate return to the application. This default version is automatically link-edited with your application unless you provide a customized version of CEEBINT.

   For more information about the function and location of the CEEBINT user exit, see Chapter 28, "Using runtime user exits," on page 421.

Language Environment termination

Language Environment termination provides services that restore the operating environment to its original state after your application either runs to completion or terminates abnormally. You can affect termination through the use of runtime options, callable services, and user exits. For example, if an unhandled condition of severity code 2 or greater occurs, you can decide if Language Environment should issue a return code or an abend code to the application. See "Termination behavior for unhandled conditions" on page 156 for more information.

What causes termination

Under Language Environment, an application terminates when any of the following conditions occur:

- The last thread in the enclave terminates (which in turn terminates the enclave).
- The main routine in the enclave returns to its caller; that is, an implicit STOP is performed.
- An HLL construct issues a request for the termination of an enclave, for example:
  - C's `abort()` function
  - C's `raise(SIGTERM)` function
  - C's `_exit()` function
  - COBOL's STOP RUN statement
  - COBOL's GOBACK statement in a main program
  - Fortran's STOP statement
  - Fortran's CALL SYSRCX, CALL EXIT, CALL DUMP, or CALL CDUMP statement
  - PL/I's STOP or EXIT function
- A default POSIX signal is received, where the default is termination.
- An abend is requested by the application (that is, the application calls CEE3ABD or CEE3AB2).

- An unhandled condition of severity 2 or greater occurs. (See "Termination behavior for unhandled conditions" on page 156 for information.)

What happens during termination

The following sequence of events occurs during termination:

1. C `atexit()` functions are invoked, if present. They are not invoked if `_exit` calls for termination or if abnormal termination occurs. The behavior of `pthread` functions are undefined if the `pthread` functions are called from an `atexit` routine.
2. PL/I FINISH ON-units are invoked if established.
3. For normal termination, the enclave return code is set (see "Managing return codes in Language Environment" on page 153). For abnormal termination caused by an unhandled condition of severity 2 or greater, either a return code and reason code or an abend is returned, based on settings specified in CEEBXITA (see "Termination behavior for unhandled conditions" on page 156).
4. CEEBXITA is invoked for enclave termination after all application code has completed, but before any enclave resources are relinquished.

   You can modify CEEBXITA to request an abend and a dump. You cannot code the CEEBXITA assembler user exit as an XPLINK application. Because the environment is still active, the dump accurately reflects the state of the environment before an enclave is terminated.
5. The environment is terminated:
   - All enclaves are terminated
   - All enclave resources are returned to the operating system
   - Any files that Language Environment manages are closed
   - Debug Tool is terminated, if active
6. CEEBXITA is invoked for process termination after the environment is terminated. You can modify CEEBXITA to close files, request an abend, or request a dump. A dump requested at this point, however, does not have the degree of detail that one requested during enclave termination has.

   CEEBXITA is not invoked for process termination if there is an unhandled condition of severity 2 or greater, or if CEEBXITA requests an abend during enclave termination. For more information about the CEEBXITA assembler user exit, see Chapter 28, "Using runtime user exits," on page 421.

Depending on the setting of the TERMTHDACT runtime option, you might receive a message, a trace of the active routines, or a dump when a condition of severity 2 or greater occurs. See *z/OS Language Environment Programming Reference* for more information about TERMTHDACT.

Thread termination

A thread terminating in a non-POSIX environment is analogous to an enclave terminating, because Language Environment supports only single threads. See "Enclave termination" on page 152 for information about enclave termination.

POSIX thread termination: A thread terminates due to `pthread_exit()`, `pthread_kill()`, or `pthread_cancel()`, or returns from the start routine of the thread in a POSIX environment. When a thread issues a `exit()` or `_exit()` or encounters an unhandled condition, that thread terminates and all other active threads are also forced to terminate. The z/OS UNIX (POSIX) environment supports multiple threads; each thread is terminated, as follows:

- The stack storage associated with the thread is freed
- Language Environment user-written condition handlers are run, if present

- The thread status is set
- Cleanup handlers and destructor routines are driven
- The stack is collapsed
- HLL members are called for thread termination

For more detailed information about POSIX functions, refer to the following resources:

- "Language Environment and POSIX signal handling interactions" on page 230
- "Mapping the POSIX program management model to the Language Environment program management model" on page 166
- *z/OS UNIX System Services User's Guide*

Enclave termination

When an enclave terminates, Language Environment releases resources allocated on behalf of the enclave and performs various other activities including the following:

- Calls HLL-specific termination routines for HLLs that were active during the executing of the program
- Runs Language Environment user-written condition handlers, if present
- Deletes modules loaded by Language Environment
- Frees all storage obtained by Language Environment services
- Calls the CEEBXITA assembler user exit for enclave termination
- Frees Language Environment control blocks for the enclave
- Depending on the setting in the HLL or assembler user exit, Language Environment sets a return code and reason code or an abend.
- Restores the program mask and registers to preinitialization values
- Returns control to the enclave creator

Process termination

Process termination occurs when the last enclave in the process terminates. Process termination deletes the structure that kept track of the enclaves within the process, releases the process control block (PCB) and associated resources, and returns control to the creator of the process.

Because Language Environment generally supports a single enclave running within a single process, termination of the enclave means that your application has terminated. For exceptions to the single enclave within a single process and an enclave return and reason code being returned to the invoker, see Chapter 31, "Using nested enclaves," on page 525..

Language Environment explicitly relinquishes all resources it gets. Routines that get resources directly from the host system (such as opening a DCB) must explicitly relinquish the resource. If these resources are not explicitly released, the environment can be corrupted because Language Environment has no method for releasing these resources.

POSIX process termination: In a z/OS UNIX environment, POSIX process termination maps to Language Environment enclave termination. For specific information about POSIX default signal action at POSIX process termination when running in a z/OS UNIX environment, see "Language Environment and POSIX signal handling interactions" on page 230.

In a z/OS UNIX environment, the following occurs if the process being terminated is a child process:

- The parent process is notified with a `wait` or a `waitpid` or saving of the exit status code.
- A new parent process ID is assigned to all child processes of the terminated process.
- If the process is a controlling process, the controlling terminal associated with the session is disassociated from the session allowing it to be acquired by a new controlling process.

Managing return codes in Language Environment

This topic discusses how Language Environment calculates and uses return codes and reason codes during enclave termination. (The return codes between subroutine calls that are implemented with programming language constructs are addressed in the appropriate language-specific programming guides.)

Before Language Environment, some HLLs (in particular, C) handled conditions that occur in the runtime environment by using a *return code*-based model. Such a model typically allows return codes to be passed between called subroutines and from the main routine back to the operating system to communicate the status of requested operations. Language Environment, on the other hand, uses a *condition*-based model to communicate conditions, as described in Chapter 18, "Using condition tokens," on page 271.

Although Language Environment supports applications that rely on passing return codes from called subroutines and checking these return codes, you are encouraged to use Language Environment condition handling mechanisms, such as user-written condition handlers, instead.

How the Language Environment enclave return code is calculated

When an enclave terminates, Language Environment provides a Language Environment enclave return code and an enclave reason code (sometimes called a return code modifier). The Language Environment enclave return code is calculated by summing the user return code generated by the HLL (see "Setting and altering user return codes" on page 154) and the enclave reason code (see "How the enclave reason code is calculated" on page 156) as follows:

```
Language Environment enclave return code = user return code + enclave reason code
```

The Language Environment enclave return code is placed in register 15, and the enclave reason code is placed in register 0.

C considerations

The Language Environment enclave return codes are incompatible with the return codes returned under the pre-Language Environment-conforming version of C.

Fortran considerations

Unlike the behavior of VS FORTRAN Version 2, where any abnormal termination is indicated with message AFB240 followed by an abend with user completion code 240, Language Environment treats an abend as a condition. The condition that represents an abend is the severity 3 condition with the message number 3250, which contains the system or user completion code and the reason code.

If this condition is not handled and the ABTERMENC(RETCODE) runtime option is in effect, then the enclave terminates with a return code of 3000 under MVS. When the ABTERMENC(ABEND) runtime option is in effect and Language Environment terminates the enclave because of an unhandled condition, an abend occurs.

PL/I considerations

The severities of some PL/I conditions have been redefined from what they were in pre-Language Environment versions of PL/I. See *z/OS Language Environment Runtime Messages* for details.

Setting and altering user return codes

User return codes can be set and altered by the CEE3SRC callable service and by language constructs. As described in the following topics, the user return code value is based on the reason an enclave terminates and the language of the routine that initiates termination.

For C and C++

If a normal return from `main()` terminates the application, the user return code value is 0. When a C or C++ routine terminates an enclave with a language construct such as `exit(`*n*`)` or `return(`*n*`)`, the value of *n* is used. In either case, any user return codes set through CEE3SRC are ignored; likewise, in an ILC application, any user return codes set with PL/I language constructs are also ignored.

If the enclave terminates due to an unhandled condition of severity 2 or greater, the user return code value used is the last one set by either CEE3SRC or, in an ILC application, PL/I language constructs. If neither CEE3SRC nor PL/I language constructs set the user return code, the user return code value is 0. See "Termination behavior for unhandled conditions" on page 156 for information about unhandled conditions. See *z/OS XL C/C++ Programming Guide* for more information about C or C++ language constructs.

For COBOL

When a COBOL program initiates enclave termination, such as with a STOP RUN statement or a GOBACK statement in a main program, the user return code value is taken from the RETURN-CODE special register; any user return codes set through CEE3SRC are ignored. Likewise, in an ILC application, any user return codes set with PL/I language constructs are also ignored. Thus, you can set and alter the user return code and pass it across program boundaries in register 15. See
| the appropriate version of the programming guide in the COBOL library at
| Enterprise COBOL for z/OS library (http://www-01.ibm.com/support/
| docview.wss?uid=swg27036733) for more information about the RETURN-CODE special register and COBOL language constructs.

If the enclave terminates due to an unhandled condition with severity 2 or greater, the RETURN-CODE special register is not used in the enclave return code calculation. Instead, the user return code value used is the last one set by either CEE3SRC or, in an ILC application, PL/I language constructs. If neither CEE3SRC nor PL/I language constructs have been used to set the user return code, the user return code value is 0. See "Termination behavior for unhandled conditions" on page 156 for information about unhandled conditions.

For Fortran

You can set and alter the user return code using the SYSRCS or SYSRCX Fortran services. You can test the value of this field using SYSRCT. Depending on how the enclave is terminated, the value of the user return code could become the enclave return code.

If the enclave terminates as a result of a STOP statement or a CALL SYSRCX statement that explicitly specifies a value to be used as a return code, then that value becomes the enclave user return code. For example, either of the following Fortran statements terminate the enclave and sets the enclave return code to 101:

- `STOP 101`
- `CALL SYSRCX(101)`

If the enclave terminates as a result of a language construct that depends on a previously established enclave user return code, then the previously established enclave user return code becomes the enclave return code. For example, the following sequence of Fortran statements sets the enclave return code to 201:

- `CALL SYSRCS(201)`
- `CALL EXIT`

The call to SYSRCS sets the enclave user return code to 201 and the call to EXIT causes the enclave user return code to be used as the enclave return code.

The return code modifier depends on the operating system and the severity of the condition, as shown in Table 24.

Table 24. Return code modifiers used by Language Environment to determine enclave return codes

Condition severity	Return code modifier
2	2000
3	3000
4	4000

If the enclave terminates due to an unhandled condition and the ABTERMENC(RETCODE) runtime option is in effect, then the enclave return code is the sum of the enclave user return code and the return code modifier. For example, when `CALL SYSRCS(201)` is executed and termination occurs as a result of an unhandled condition of severity 3, the enclave return code is 3201.

For PL/I

You can set and alter the user return code with the PLIRETC function or the OPTIONS(RETCODE) attribute. The PLIRETV function retrieves the current value of the user return code.

When a PL/I routine initiates enclave termination, such as with a STOP or EXIT statement in a subroutine or with a RETURN or END statement in a main procedure, the user return code is the value set with the PLIRETC function or the OPTIONS(RETCODE) attribute. However, CEE3SRC can alter the user return code set with PLIRETC or the OPTIONS(RETCODE) attribute. If CEE3SRC was the last method used to set the user return code, the last three bytes of the return-code set by CEE3SRC are used as the user return code.

If the enclave terminates due to an unhandled condition with severity 2 or greater, the user return code value set last (with either PL/I constructs or CEE3SRC) is used in the calculation of the enclave return code; if one has not been set, the user return code value is 0. See "Termination behavior for unhandled conditions" for information about unhandled conditions.

CEE3SRC and CEE3GRC are not supported in PL/I multitasking applications.

See IBM Enterprise PL/I for z/OS library (http://www.ibm.com/support/docview.wss?uid=swg27036735) for details about the PL/I language constructs.

How the enclave reason code is calculated

The enclave reason code provides additional information in support of the enclave return code. Language Environment calculates the enclave reason code by multiplying a severity code (that indicates how an enclave terminated) by 1000.

The severity code is initially set to 0, indicating normal enclave termination. If the Termination_Imminent due to STOP (T_I_S) condition is signaled, it is set to 1. If the enclave terminates due to an unhandled condition of severity 2 or greater, the enclave reason code is set according to the severity of the unhandled condition that caused the enclave to terminate, as shown in Table 25. For more information about Language Environment conditions and severity codes, see Table 34 on page 201.

Table 25 contains a summary of the enclave reason code produced when an enclave terminates. The condition severity column indicates the reason code for the original condition.

Table 25. Summary of enclave reason codes

Condition severity	Meaning	Enclave reason code — (R0)
0	Normal application termination	0
Severity 1 condition	Termination_Imminent due to STOP	1000
Unhandled severity 2 condition	Error — abnormal termination	2000
Unhandled severity 3 condition	Severe error — abnormal termination	3000
Unhandled severity 4 condition	Critical error — abnormal termination	4000

Termination behavior for unhandled conditions

When there is an unhandled condition of severity 2 or greater, you can choose whether an enclave terminates with an abend or with a return code and a reason code. Language Environment will assign an abend code and return and reason code, as described in this topic, or you can assign values yourself, as described in "Setting and altering user return codes" on page 154.

See Table 34 on page 201 for a discussion of conditions and how they are handled in Language Environment, and "Language Environment and POSIX signal handling interactions" on page 230 for specific information pertaining to POSIX signal action defaults and unhandled conditions in a z/OS UNIX environment.

Some users, especially those using COBOL or running IMS applications, expect to receive an abend when an error is detected rather than a return code and a reason code. To get this behavior, they can use the ABTERMENC(ABEND) runtime option

discussed in "Abend codes generated by ABTERMENC(ABEND) runtime option" on page 158. Other users, however, expect to receive a return code and a reason code when there is an error.

If you are running in a CICS environment, the IBM-supplied default is to terminate the enclave with an abend for unhandled conditions of severity 2 or greater.

If you are running in a non-CICS environment and you expect the enclave to terminate with a return code and a reason code for unhandled conditions of severity 2 or greater, you can use the ABTERMENC(RETCODE) runtime option and the CEEBXITA assembler user exit. The default version of CEEBXITA for non-CICS environments requests that the enclave terminate with a return code and a reason code.

Table 26 shows the various types of enclave termination that occur based on the ABTERMENC runtime option settings and the CEEAUE_ABND flag settings of CEEBXITA. See "CEEBXITA assembler user exit interface" on page 427 for an explanation of the CEEAUE_ABND flag.

Table 26. Termination behavior for unhandled conditions of severity 2 or greater

ABTERMENC suboption	Value of CEEAUE_ABND flag enclave termination	Enclave termination type
RETCODE	0	Return to caller with return code and reason code
RETCODE	1	Abend using CEEAUE_RETC and CEEAUE_RSNC
ABEND	0	Abend using the abend codes listed in Table 28 on page 158
ABEND	1	Abend using CEEAUE_RETC and CEEAUE_RSNC

Determining the abend code

You can choose the abend code you want Language Environment to use, based on whether the abend is requested by the assembler user exit or whether the ABTERMENC(ABEND) runtime option is used.

Abend codes generated by CEEBXITA

When you request an abend through CEEBXITA, the values contained in certain fields of the exit are used for the abend code and the reason code. Table 27 shows the abend codes used by Language Environment when CEEBXITA requests an abend and does not modify the CEEAUE_RETC code field.

Table 27. Abend codes used by Language Environment when the Assembler user exit requests an abend

Condition severity	User return code	Abend code in non-CICS	Abend code in CICS
2	0	User abend 2000	Transaction abend 2000
3	0	User abend 3000	Transaction abend 3000
4	0	User abend 4000	Transaction abend 4000

Abend codes generated by ABTERMENC(ABEND) runtime option

Language Environment terminates the enclave with the same abend code that caused the unhandled condition of severity 2 or greater if **all** of the following are true:

- You use the ABTERMENC(ABEND) runtime option.
- The unhandled condition was generated by an abend.
- The assembler user exit does not alter the CEEAUE_ABND flag setting.

Table 28 shows the abend code and reason code used when the enclave terminates due to the various unhandled conditions of severity 2 or greater and ABTERMENC(ABEND) is specified in both CICS and non-CICS environments.

Table 28. Abend code values used by Language Environment with ABTERMENC(ABEND)

Unhandled condition	Abend code	Abend reason code
ABEND	The original abend code	In non-CICS environment, the original abend reason code
Program interrupt	See "Program interrupt abend and reason codes" for program interrupt abend codes	
Software-raised condition	A user 4038 abend is used in a non-CICS environment and a transaction 4038 abend is used in a CICS environment	In a non-CICS environment, X'1'
Unsuccessful LOAD (non-CICS)	The abend code that would have been used by the operating system.	The abend reason code that would have been used by the operating system.

Note: In a CICS environment, when an abend is issued, only the abend code is returned. CICS does not return an abend reason code.

Program interrupt abend and reason codes

A program interrupt can cause an unhandled condition of severity 2 or greater. When running with the ABTERMENC(ABEND) runtime option in a CICS environment, an abend code of ASRA is issued for program interrupts. When running with the ABTERMENC(ABEND) runtime option in a non-CICS environment, the abend codes and reason codes shown in Table 29 are issued for program interrupts.

Table 29. Program interrupt abend and reason codes in a non-CICS environment

Program interrupts	Abend code	Abend reason code
Operation exception	S0C1	00000001
Privileged operation exception	S0C2	00000002
Execute exception	S0C3	00000003
Protection exception	S0C4	00000004
Segment translation exception (note 1)	S0C4	00000004
Page translation exception (note 2)	S0C4	00000004
Addressing exception	S0C5	00000005
Specification exception	S0C6	00000006
Data exception	S0C7	00000007
Fixed-point overflow exception	S0C8	00000008

Table 29. Program interrupt abend and reason codes in a non-CICS environment (continued)

Program interrupts	Abend code	Abend reason code
Fixed-point divide exception	S0C9	00000009
Decimal overflow exception	S0CA	0000000A
Decimal divide exception	S0CB	0000000B
Exponent overflow exception	S0CC	0000000C
Exponent underflow exception	S0CD	0000000D
Significance exception	S0CE	0000000E
Floating-point divide exception	S0CF	0000000F

Note:

1. The operating system issues abend code S0C4 reason code 10 for segment translation program interrupts.
2. The operating system issues abend code S0C4 reason code 11 for page translation program interrupts.

Chapter 13. Program management model

Now that you have been introduced to how applications run in Language Environment, you need to understand the model of program management under which Language Environment operates. Understanding the model helps you recognize equivalent entities across Language Environment-conforming programming languages and predict how your single- and mixed-language applications run. This topic provides an overview of the Language Environment model.

The Language Environment program management model supports the language semantics of applications that run in the common run-time environment and defines the way routines or programs are put together to form an application. Language Environment implements a subset of the POSIX program management model. Features not supported in z/OS Language Environment are indicated.

The POSIX program management model differs somewhat from the Language Environment program management model. Refer to "Mapping the POSIX program management model to the Language Environment program management model" on page 166 for more information.

The Language Environment program management model has three basic entities — the process, enclave, and thread, each of which Language Environment creates whenever you start execution of an HLL application. A description is provided of the entities and their relationship to program management.

Model terminology for Language Environment program management

Some terms used to describe the program management model are common programming terms; others have meanings that are specific to a given language. It is important that you understand the meaning of the terminology Language Environment uses and how it compares with existing languages. For more detailed definitions of these and other Language Environment terms, see the glossary in *z/OS Language Environment Concepts Guide*.

Language Environment terms and their HLL equivalents

Process
: The highest level of the Language Environment program management model; a collection of resources, both program code and data, consisting of at least one enclave.

Enclave
: The enclave defines the scope of HLL semantics. In Language Environment, a collection of routines, one of which is designated as the main routine. The enclave contains at least one thread.

  Equivalent HLL terms: C or C++ – program, consisting of a main C or C++ function and its subroutines, COBOL – run unit, Fortran – executable program, consisting of a main Fortran program and its subprograms, PL/I – main procedure and all its subprocedures.

Thread
: An execution entity that consists of synchronous invocations and

© Copyright IBM Corp. 1991, 2015

terminations of routines. The thread is the basic runtime path within the Language Environment program management model; dispatched by the system with its own runtime stack, instruction counter, and registers.

Routine
In Language Environment, either a procedure, function, or subroutine.

Equivalent HLL terms: C or C++ – function, COBOL – program, Fortran – program, PL/I – procedure, BEGIN/END block.

Terminology for data

Automatic data
Data that does not persist across calls. In the absence of a specific initializer, automatic data get "accidental" values that may depend on the behavior of the caller or the last function to be called by the caller.

External data
Data with one or more named points by which the data can be referenced by other program units and data areas. External data is known throughout an enclave.

Local data
Data known only to the routine in which it is declared; equivalent to local data in C, C++, or Fortran, any non-EXTERNAL data items in COBOL, and data with the PL/I INTERNAL attribute (whether implicitly, or by explicit declaration).

Figure 51 on page 163 shows the simplest form of the Language Environment program management model and the resources that each component controls. Refer to the figure as you read about the program management model.

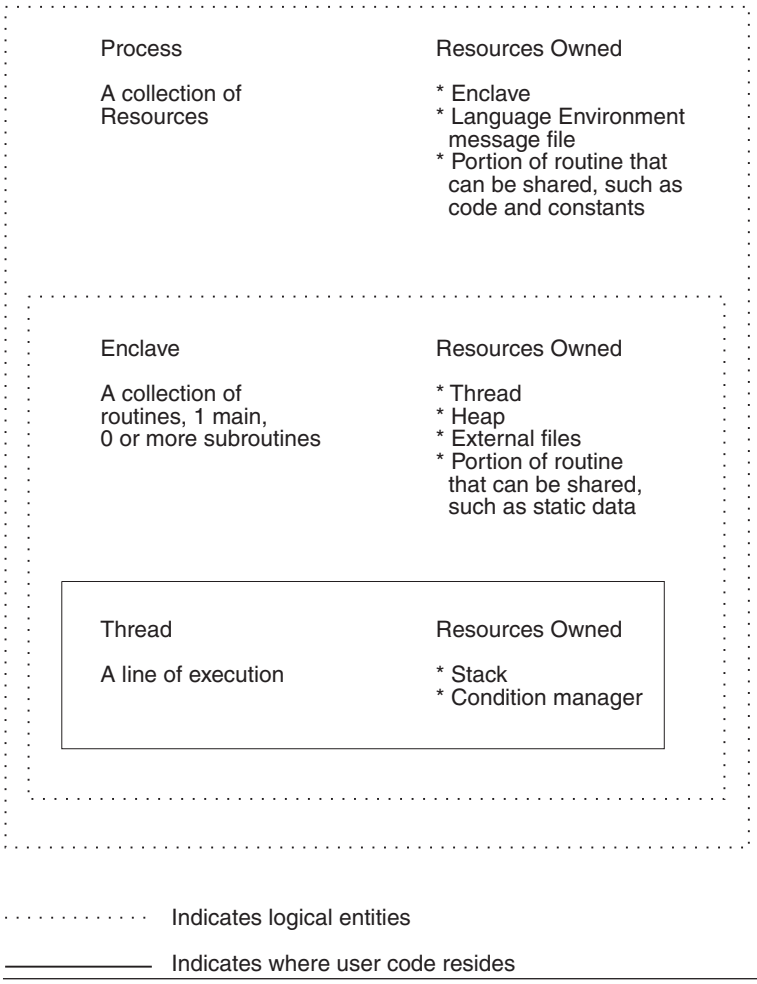

Figure 51. Program management model illustration of resource ownership

Processes

A *process* is a collection of resources, both application code and data, consisting of one or more related enclaves.The process is the outermost or highest level runtime component of the common run-time environment. The resources maintained at the process level do not affect the language semantics of an application running at the enclave level.

The Language Environment library is an example of the type of resource that is maintained at the process level. The Language Environment library is loaded at process initialization, although it could be loaded for any of the individual enclaves within the process at enclave initialization. The process is used in the same way by all enclaves created within the process. It has no effect on the HLL semantics of applications running within each of the enclaves.

Each process has an address space that is logically separate from those of other processes. Except for communications with each other using certain Language Environment mechanisms, no resources are shared between processes; processes do not share storage, for example. A process can create other processes. However, all processes are independent of one another; they are not hierarchically related.

Although the Language Environment program model supports applications consisting of one or more processes, z/OS Language Environment supports only a single process for each application that runs in the common run-time environment.

Enclaves

A key feature of the program management model is the *enclave*, which consists of one or more load modules, each containing one or more separately compiled, bound routines. A load module can include HLL routines, assembler routines, and Language Environment routines.

The enclave defines the scope of language semantics

By definition, the scope of a language statement is that portion of code in which it has semantic effect. The enclave defines the scope of the language semantics for its component routines, just as a COBOL run unit defines the scope of semantics of a COBOL program. Scope encompasses names, external data sharing, and control statements such as C's `exit()`, COBOL's STOP RUN, Fortran's STOP, and PL/I's STOP and EXIT statements.

The enclave defines the scope of the definition of the main routine and subroutines

The enclave boundary defines whether a routine is a *main* routine or a *subroutine*. The first routine to run in the enclave is known as the main routine in Language Environment. All others are designated subroutines of the main routine.

The first routine invoked in the enclave must be capable of being designated main according to the rules of the language of the routine. For example, a main routine in a Language Environment-conforming PL/I application would be the PROC OPTIONS (MAIN) routine. All other routines invoked in the enclave must be capable of being a subroutine according to the rules of the languages of the routines.

If a routine is capable of being invoked as either a main or subroutine, and recursive invocations are allowed according to the rules of the language, the routine can be invoked multiple times within the enclave. The first of these invocations could be as a main routine and the others as subroutines.

The enclave defines the scope and visibility of the following types of data

- Automatic data: Automatic data is allocated with the same value on entry and reentry into a routine if it has been initialized to that value in the semantics of the language used, for example, data declared using the PL/I INIT() option. Values of the data at exit from the routine are not retained for the next entry into the routine. The scope of automatic data is a routine invocation within an enclave.
- External data: External data persists over the lifetime of an enclave and retains last-used values whenever a routine is reentered. The scope of external data is that of the enclosing enclave; all routines invoked within the enclave recognize the external data. Examples are C or C++ data objects of `extern` storage class, COBOL data items defined with the EXTERNAL attribute, Fortran common blocks, and PL/I data declared as EXTERNAL.
- Local data: The scope of local data is that of the enclosing enclave; however, local data is recognized only by the routine that defines it. Examples are any C or PL/I variable with block scope, any Fortran data declared as AUTOMATIC, and any non-EXTERNAL data item in COBOL.

The enclave defines the scope of language statements

The enclave defines the scope of language statements — for example, those that stop execution of the outermost routine within an enclave. C's `exit()`, COBOL's STOP RUN, Fortran's STOP and END statements, and PL/I's STOP and EXIT statements are examples of such statements. When one of these statements is executed, the main routine within the enclave terminates. Thus, the enclave defines the scope of the language statements.

Before returning, resources obtained by the routines in the enclave are released and any open files (other than the Language Environment message file) are closed.

Additional enclave characteristics

Management of resources

The enclave manages most Language Environment resources, such as the thread and heap storage, other than the message file (which is managed as a process-level resource). Heap storage, for example, is shared among all threads within an enclave. Allocated heap storage remains allocated until explicitly freed or until the enclave terminates. None of the enclave-managed resources is shared between enclaves.

Multiple enclaves

z/OS Language Environment provides explicit support for a single enclave within a single process. Under some circumstances, however, multiple enclaves can exist within a single process. A description of how to create multiple, or nested, enclaves can be found in Chapter 31, "Using nested enclaves," on page 525.

Threads

Within each enclave is a *thread*, the basic runtime path represented by the machine state; conditions raised during execution are isolated to that runtime path.

Threads share all of the resources of an enclave and therefore do not need to selectively create or load new copies of resources, code, or data. Although a thread does not own its storage, it can address all storage within the enclave. All threads are independent of one another and are not related hierarchically. A thread is dispatched with its own runtime stack, instruction counter, registers, and condition handling mechanisms.

Because threads operate with unique runtime stacks, they can run concurrently within an enclave and allocate and free their own storage. Concurrent, or parallel, processing, is useful when code is event-driven, or for improving the performance of a large application.

The full Language Environment program management model

Figure 52 on page 166 illustrates the relationship between the various entities that make up the Language Environment program management model.

As Figure 52 on page 166 shows, each process exists within its own address space. An enclave consists of one main routine with any number of subroutines. External data is available only within the enclave in which it resides. External data items that happen to be identically named in different enclaves reference distinct storage locations; the scope of external data is the enclave. The threads can create enclaves,

which can create more threads, and so on.

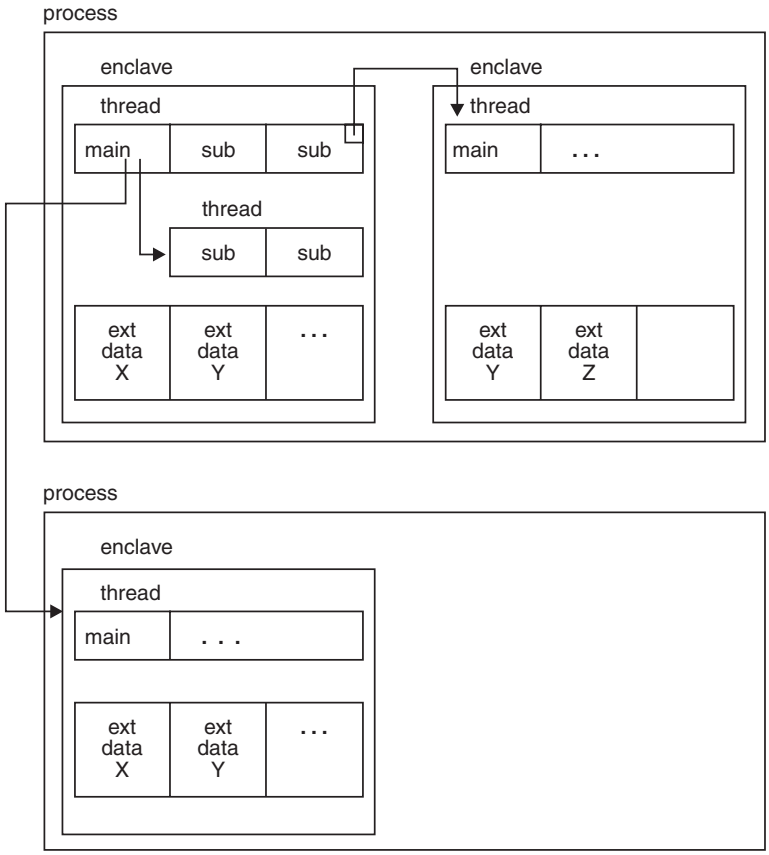

Figure 52. Overview of the full Language Environment program management model

Mapping the POSIX program management model to the Language Environment program management model

Language Environment in conjunction with z/OS UNIX supports POSIX standards (POSIX 1003.1 and POSIX 1003.1c) and the XPG4 standard. The POSIX standard follows a program management model which differs somewhat from the Language Environment program management model. This section provides a helpful comparison of both models.

The descriptions intended to be a brief review for C users of the characteristics of POSIX program entities. For full definitions of these terms, refer to the ISO/IEC9945 for POSIX 1003.1 and POSIX 1003.1c. The XPG4 standard is described in detail in *X/Open Specification Issue 4*.

Key POSIX program entities and Language Environment counterparts

POSIX defines four program model constructs:

Process

An address space, at least one thread of control that executes within that address space, and the thread's or threads' required system resources.

In general, POSIX processes are peers; they run asynchronously and are independent of one other, unless your application logic requests otherwise.

Some aspects of selected processes are hierarchical, however. A C process can create another C process (no ILC is allowed) by calling the `fork()` or `spawn()` functions. Certain function semantics are defined in terms of the parent process (the invoker of the fork) and the child process (cloned after the fork). For example, when a parent process issues a `wait()` or `waitpid()`, the parent process' logic is influenced by the status of the child process or processes.

A Language Environment process with a single enclave maps approximately to a POSIX process. In Language Environment, starting a main routine creates a new process. In POSIX, issuing a `fork()` or a `spawn()` creates a new process. A POSIX `sigaction` of `stop`, `terminate`, or `continue` applies to the entire POSIX process.

A Language Environment process with multiple enclaves is a Language Environment extension to POSIX. If a process contains more than one enclave, only the first enclave in the process can have POSIX(ON) specified. All of the nested enclaves must be POSIX(OFF). A process that contains any POSIX(OFF) enclaves cannot issue a `fork()` or a `spawn()`, either explicitly or implicitly (`popen()` being mapped to `fork()` and `exec()`).

Note: The scope of a specific POSIX function might be the Language Environment process or Language Environment enclave. See "Scope of POSIX semantics" for details.

Process group
Collection of processes. Group membership allows member processes to signal one another, and affects certain termination semantics.

No Language Environment entity maps directly to a POSIX process group.

Session
Collection of process groups. Conceptually, a session corresponds to a logon session at a terminal.

No Language Environment entity maps directly to a POSIX session, but a session is a rough equivalent of a Language Environment application whose execution scope is bounded by the end user logon and logoff.

Thread
A single flow of control within a process. Each thread has its own thread ID, state of any timers, *errno* value, thread-specific bindings, and the required system resources to support a flow of control. Threads are independent and not hierarchically related.

A Language Environment thread maps to a POSIX thread. POSIX `pthread_create` creates a new thread under Language Environment.

An enclave that contains multiple threads cannot issue `fork()`, either explicitly or implicitly (`popen()` being mapped to `fork()` and `exec()`).

Scope of POSIX semantics

Some general rules for the scope of POSIX processes follow, as illustrated in Figure 53 on page 168:

- POSIX semantics applied to a POSIX process from outside the POSIX process (interprocess semantics) are applied to a Language Environment process. For

example, a signal directed from a process to another process using `kill` is applied to a Language Environment process.

- POSIX semantics scoped to within the current POSIX process (intraprocess semantics) apply to the current Language Environment enclave. For example, heap storage is recognized throughout an enclave.

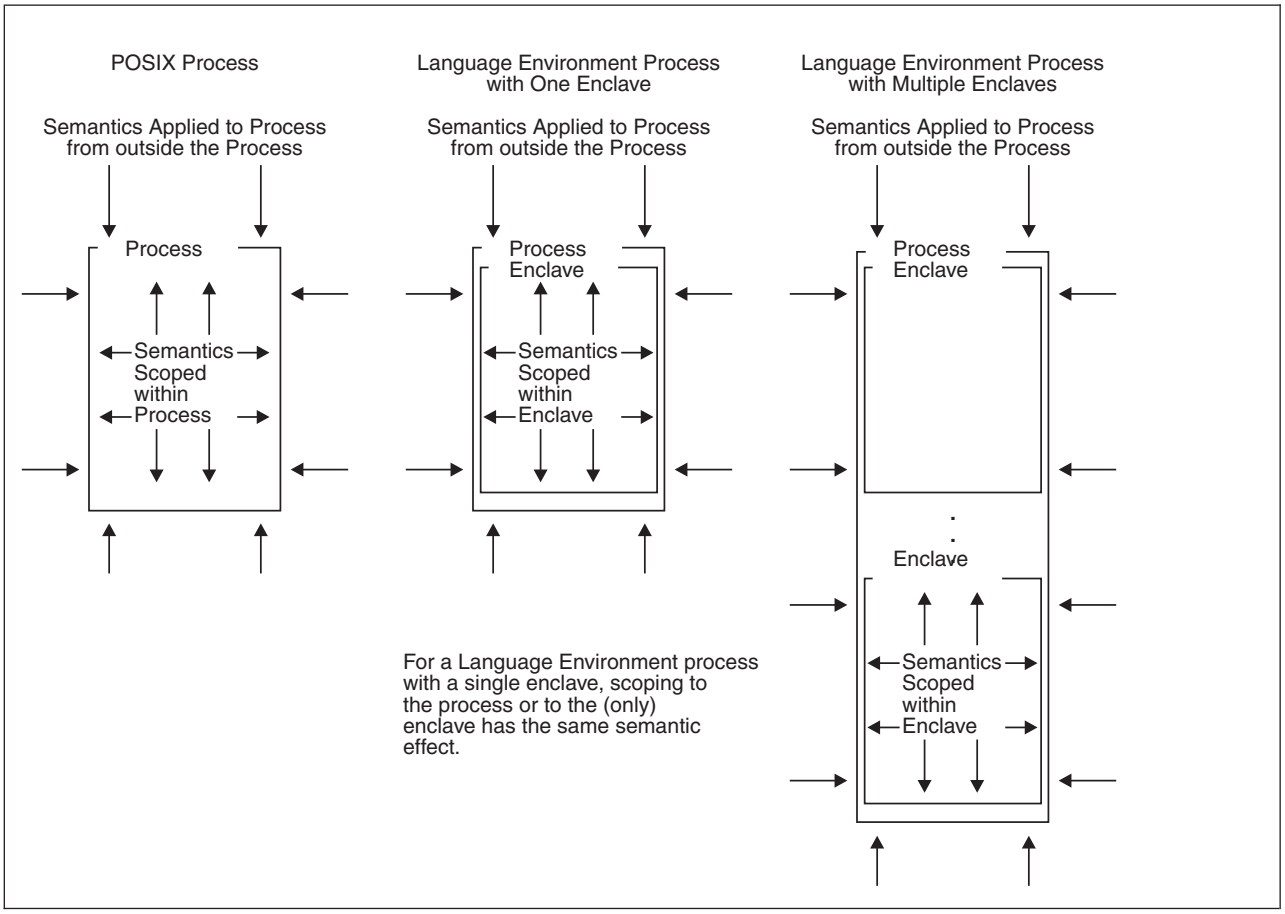

Figure 53. Scope of semantics against POSIX processes and Language Environment processes and enclaves

Chapter 14. Stack and heap storage

Language Environment provides services that control the stack and heap storage used at run time. Language Environment-conforming HLLs and assembler routines use these services for all storage requests.

How Language Environment-conforming languages uses stack and heap storage

Table 30. Usage of stack and heap storage by Language Environment-conforming languages

Language	Stack	Heap
C or C++	• Automatic variables • Library routines	Variables allocated by: • `malloc()` function • `calloc()` function • `realloc()` function • Static external (RENT)
COBOL	• Intrinsic functions • Library routines • LOCAL-STORAGE variables	• WORKING-STORAGE variables
Fortran	• Library routines	• Dynamic common blocks • Variables allocated by ALLOCATE statement (VS Fortran Version 2 Release 6 only)
PL/I	• Automatic variables • Library routines	• BASED variables • CONTROLLED variables • AREA variables

Related runtime options

Table 31. Runtime options and functions

Runtime option	Function
ANYHEAP	Allocates library (HLL and Language Environment) heap storage above or below 16 MB
BELOWHEAP	Allocates library heap storage below 16 MB
HEAP	Allocates storage for user-controlled dynamically allocated variables
HEAPCHK	Specifies that heap storage be inspected for damage.
HEAPPOOLS	Improves the performance of heap storage allocation
HEAPZONES	Provides a heap check zone for each storage request
LIBSTACK	On non-CICS, used by library routine stack frames that must be below 16 MB
RPTSTG	Generates a storage report
STACK	Used by library routine stack frames that can reside anywhere in storage
STORAGE	Controls the initial content and amount of storage reserved for the out-of-storage condition

© Copyright IBM Corp. 1991, 2015

Table 31. Runtime options and functions (continued)

Runtime option	Function
THREADHEAP	Controls the allocation and management of thread-level heap storage
THREADSTACK	Controls the upward- and downward-growing stack allocation for each thread, except the initial thread, in a multithreaded environment

See *z/OS Language Environment Programming Reference* for syntax information.

Related callable services

Related callable services:

Table 32. Runtime options and functions

Callable service	Function
CEECRHP	Defines additional heaps
CEECZST	Changes the size of a previously allocated heap element
CEEDSHP	Discards an entire heap created with CEECRHP
CEEFRST	Frees storage allocated by CEEGTST or an intrinsic language function
CEEGTST	Gets storage from a heap whose ID you specify
CEE3RPH	Sets the heading displayed at the top of the storage options report

See *z/OS Language Environment Programming Reference* for syntax information.

Stack storage overview

Note: The term *stack* refers to the *user stack*, which is an independent area of stack storage that can be located above or below the 16 MB line, designed to be used by both library routines and compiled code. All references to *stack storage* and *stack frame* are to real storage allocation, as opposed to *invocation stack*, which refers to a conceptual stack.

Stack storage is the storage provided by Language Environment that is needed for routine linkage and any automatic storage. It is allocated on entry to a routine or block, and freed on the subsequent return. It is a contiguous area of storage obtained directly from the operating system. Stack storage is automatically provided at thread initialization and is available in the *user stack*.

The user stack is used by both library routines and, except for Fortran, compiled code. Stack storage is also available in the *library stack*, which is an independent area of stack storage, allocated below the 16 MB line, designed to be used only by library routines.

A *storage stack* is a data structure that supports procedure or block invocation (call and return). It is used to provide both the storage required for the application initialization and any automatic storage used by the called routine. Each thread has a separate and distinct stack.

The storage stack is divided into large segments of storage called *stack segments*, which are further divided into smaller segments called *stack frames*, also known as dynamic storage areas (DSAs). A stack frame, or DSA, is dynamically acquired storage composed of a register save area and an area available for dynamic storage allocation for items such as program variables. Stack frames are added to the user stack when a routine is entered, and removed upon exit in a last in, first out (LIFO) manner. Stack frame storage is acquired during the execution of a program and is allocated every time a procedure, function, or block is entered, as, for example, when a call is made to a Language Environment callable service, and is freed when the procedure or block returns control.

The first segment used for stack storage is called the *initial stack segment*. When the initial stack segment becomes full, a second segment, or *stack increment* is obtained from the operating system. As each succeeding stack increment becomes full, another is obtained from the operating system as needed. The size of the initial stack segment and the size of the increments are specified by the *init_size* and *incr_size* parameters of the STACK runtime option. For more information about the STACK runtime option, see *z/OS Language Environment Programming Reference*.

Figure 54 shows the standard Language Environment stack storage model. The XPLINK stack (see Figure 17 on page 32) is structured differently. See Chapter 3, "Using Extra Performance Linkage (XPLINK)," on page 29 for information about XPLINK.

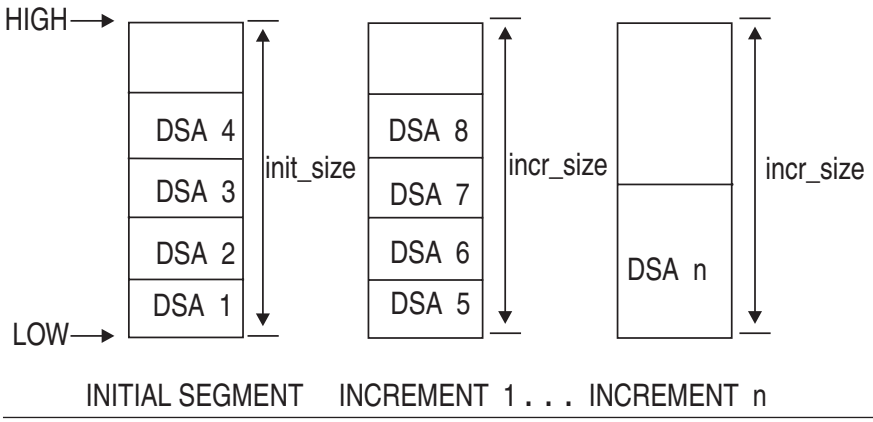

Figure 54. Language Environment stack storage model

Tuning stack storage

For best performance, the initial stack segment should be large enough to satisfy all requests for stack storage. The Language Environment storage report generated by the RPTSTG(ON) option (see *z/OS Language Environment Programming Reference*) shows you how much stack storage is being used, the total number of segments allocated to the stack, and the recommended values for the STACK runtime option. An initial stack segment that is too large can waste storage and degrade overall system performance, especially under CICS where storage is limited.

You can tune stack storage by using the Language Environment STACK and THREADSTACK runtime options; consult *z/OS Language Environment Programming Reference* for details.

RPTSTG(ON) and the STORAGE runtime option (see *z/OS Language Environment Programming Reference*) can have a negative affect on the performance of your application, because as the application runs, statistics are kept on storage requests. Therefore, always use the IBM-supplied default setting RPTSTG(OFF) when running production jobs. Use RPTSTG(ON) and STORAGE only when debugging or tuning applications.

COBOL storage considerations

Storage for data items declared in the COBOL LOCAL-STORAGE SECTION is allocated from the Language Environment user stack. The storage location of data items declared in COBOL LOCAL-STORAGE SECTION is controlled by the Language Environment STACK option. The COBOL compiler options do not affect the location of data items declared in the COBOL LOCAL-STORAGE SECTION.

PL/I storage considerations

PL/I automatic storage is provided by the Language Environment user stack. Automatic storage above the 16 MB line is supported under control of the Language Environment STACK and THREADSTACK runtime options. When the Language Environment user stack is above 16 MB, PL/I temporaries (dummy arguments) and parameter lists (for reentrant/recursive blocks) also reside above 16 MB. As long as an OS PL/I application does not contain edited stream I/O (for example, the EDIT option is not used in a PUT statement) and is running with AMODE(31), you can relink it with Language Environment to allow for STACK(,,ANY) to be used. For Enterprise PL/I for z/OS and PL/I for MVS & VM, as long as the application is AMODE(31), STACK(,,ANY) is supported. The stack frame size for an individual block is constrained to 16 MB, which means the size of an automatic aggregate, temporary variable, or dummy argument cannot exceed 16 MB.

Heap storage overview

Heap storage is used to allocate storage that has a lifetime not related to the execution of the current routine; it remains allocated until you explicitly free it or until the enclave terminates. You can control allocation and freeing of heap storage using Language Environment callable services, and tune heap storage using the Language Environment runtime options HEAP, THREADHEAP and HEAPPOOLS; see *z/OS Language Environment Programming Reference* for details.

Heap storage is shared among all program units and all threads in an enclave. Any thread can free heap storage. You can free one element at a time with the CEEFRST callable service, or you can free all heap elements at once using CEEDSHP. You cannot, however, discard the initial heap.

Storage can be allocated or freed with any of the HLL storage facilities, such as `malloc()`, `calloc()`, or ALLOCATE, along with the Language Environment storage services. For HLLs with no intrinsic function for storage management, such as COBOL, you can use the Language Environment storage services.

When HEAPPOOLS(ON) or HEAPPOOLS(ALIGN) is in effect, the C storage management intrinsic functions must be used together. That is, if you `malloc()`, you must use `free()` to release the storage, you cannot use CEEFRST. See "Using HEAPPOOLS to improve performance" on page 174 for more information about heap pools.

Heap storage, sometimes referred to as a *heap*, is a collection of one or more *heap segments* comprised of an *initial heap segment*, which is dynamically allocated at the first request for heap storage, and, as needed, one or more *heap increments*, allocated as additional storage is required. The initial heap is provided by Language Environment and does not require a call to the CEECRHP service. The initial heap is identified by *heap_id=0*. It is also known as the *user heap*. See Figure 55 on page 174 for an illustration of Language Environment heap storage.

Heap segments, which are contiguous areas of storage obtained directly from the operating system, are subdivided into individual *heap elements*. Heap elements are obtained by a call to the CEEGTST service, and are allocated within each segment of the initial heap by the Language Environment storage management routines. When the initial heap segment becomes full, Language Environment gets another segment, or increment, from the operating system.

The size of the initial heap segment is governed by the *init_size* parameter of the HEAP runtime option. (See *z/OS Language Environment Programming Reference*.) The *incr_size* parameter governs the size of each heap increment.

A *named heap* is set up specifically by a call to the CEECRHP service, which returns an identifier when the heap is created. *Additional heaps* can also be created and controlled by calls to CEECRHP.

Additional heaps provide isolation between logical groups of data in different additional heaps. Separate additional heaps when you need to group storage objects together so they can be freed at once (with a single call to CEEDSHP), rather than freed one element at a time (with calls to CEEFRST).

Library routines occasionally use a heap called the *library heap* for storage below 16 MB. The size of this heap is controlled by the BELOWHEAP runtime option. The library heap and the BELOWHEAP runtime option have no relation to heaps created by CEECRHP. If an application program creates a heap using CEECRHP, library routines never use that heap (except, of course, the storage management library routines CEEGTST, CEEFRST, CEECZST, and CEEDSHP). The library heap can be tuned with the BELOWHEAP runtime option.

The Language Environment anywhere heap and below heap are reserved for runtime library usage only. Application data and variables are not kept in these heaps. You normally should not adjust the size of these heaps unless the storage report indicates excessive segments allocated for the anywhere or below heaps, or if too much storage has been allocated.

You can use the Language Environment STORAGE option to diagnose the use of uninitialized and freed storage.

Language Environment provides a memory leak analysis tool (MEMCHECK) to perform the following functions:

- Check for heap storage leaks, double frees, overlays and print them in a report.
- Trace user heap storage allocation and deallocation requests and print them in a report.

See *z/OS Language Environment Debugging Guide* for more information on MEMCHECK.

You can use the HEAPCHK runtime option to run heap storage tests and to help identify storage leaks. The HEAPZONES runtime option can be used to identify storage overlay damage.

See Chapter 9, "Using runtime options," on page 119 and *z/OS Language Environment Programming Reference* for more information about using Language Environment runtime options.

Figure 55 shows the Language Environment heap storage model.

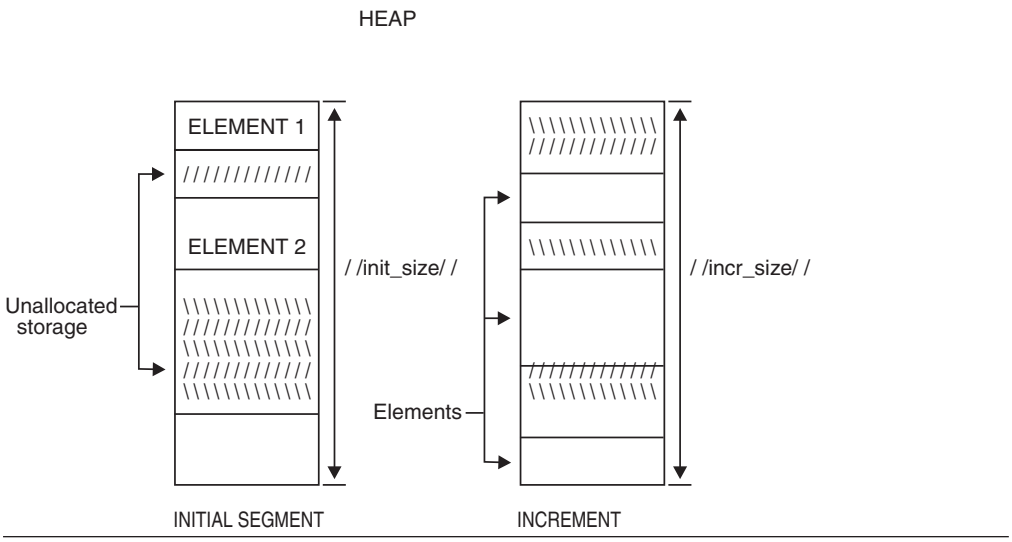

Figure 55. Language Environment heap storage model

Using HEAPPOOLS to improve performance

Heap pools is an optional storage allocation algorithm for C/C++ applications that is much faster than the normal `malloc()/free()` algorithm in most circumstances. The algorithm is designed to avoid contention for storage in a multithreaded application, and therefore it is important to investigate if your application can benefit from its use.

The heap pools algorithm allows for between one and twelve sizes of storage cells that are allocated from pools out of the heap. For each size, from one to 255 pools can be created where each pool is used by a portion of the threads for allocating storage. The sizes of the cells, the number of pools for each size and cell pool extents are specified by the HEAPPOOLS runtime option, which is also used to enable the heap pools algorithm.

Note: Use of the Vendor Heap Manager (VHM) overrides the use of the HEAPPOOLS runtime option.

Applications which should use heap pools

The following types of applications can benefit from the use of heap pools:

- Multi-threaded applications: although single-threaded applications can benefit from the heap pools algorithm, multi-threaded applications can get the most benefit because the proper use of heap pools virtually eliminates contention for heap storage.

- Applications which issue many storage requests with a `malloc()` of 65536 bytes or less, because the heap pools algorithm is not used in a `malloc()` that is greater than 65536 bytes.
- Applications that are not storage constrained: the heap pools algorithm gives up storage for speed. When untuned, the heap pools algorithm uses much more storage than the normal `malloc()/free()` algorithm; when properly tuned it uses only slightly more. Therefore, storage constrained applications should try heap pools, but only if the cell sizes and cell pool percentages are carefully tuned. (For tuning information, see "Tuning heap storage" on page 176.) It is possible that some applications running with the heap pools algorithm will have to increase their region size.

Heap pools modes of operation

Heap pools can be operated in two modes:

ON This mode is selected by specifying the runtime option HEAPPOOLS(ON). This mode will avoid contention during storage allocation and release. This mode uses less storage.

ALIGN This mode is selected by specifying HEAPPOOLS(ALIGN). In addition to avoiding contention during storage allocation and release, the goal of this mode is to reduce cache contention when two adjacent cells are being updated at the same time. Only multi-threaded applications will gain additional benefits from using ALIGN mode instead of ON mode. This mode uses more storage.

Choosing the number of pools for a cell size

Contention occurs when two or more threads are allocating or freeing cells that are the same size at the same time. Using multiple pools should eliminate some of this contention because only a portion of the threads will be allocating from each pool. For most cell sizes, there is little contention and one pool is sufficient. However, there may be one or two cell sizes where a lot of successful get heap requests are occurring and the maximum cells used is high. These sizes can be candidates for multiple pools. Determining the optimum number of pools to use for these cell sizes will involve comparing performance measurements, like throughput, when different values are used for a representative application workload.

Heap IDs recognized by the Language Environment heap manager

Table 33 lists Language Environment heaps and their respective purposes.

Table 33. Heap IDs recognized by Language Environment heap manager

Heap name	Heap ID	Intended purpose	Created by	Disposed by
Initial heap user heap	0	Application program data. Common heap used by language intrinsic functions and COBOL WORKING-STORAGE data items. CEEDSHP has no effect on the initial heap. COBOL access is by Language Environment callable services.	Enclave initialization. Size and location determined from HEAP runtime option.	Enclave termination

Table 33. Heap IDs recognized by Language Environment heap manager (continued)

Heap name	Heap ID	Intended purpose	Created by	Disposed by
Additional heaps and user heap	(Returned by CEECRHP)	Collections of application program data that can be quickly disposed with a single CEEDSHP call.	Call to CEECRHP. Arguments define heap size, location, and other characteristics.	Call to CEEDSHP Enclave termination

AMODE considerations for heap storage

The *initsz24* and *incrsz24* parameters of the HEAP runtime option control the initial size and subsequent increments of heap storage allocated below the 16 MB line. This storage is required for AMODE(24) applications running with the ALL31(OFF) and HEAP(,,ANYWHERE) runtime options in effect.

For example, suppose the initial heap segment is allocated above 16 MB. If an AMODE(24) routine requests storage from this initial heap, Language Environment must allocate a heap segment from below the 16 MB line so that the AMODE(24) routine can address the storage.

When a Fortran program is in AMODE(24), heap storage is allocated below the 16 MB line. The allocation of heap storage in a Fortran common block is sensitive to the AMODE setting of the requester program. For example, if a requester in AMODE(31) calls a Fortran program in AMODE(24), heap storage is allocated above the 16 MB line as defined by the AMODE(31) setting of the requester.

OS PL/I uses HEAP(,,ANYWHERE) as the default location for heap storage. The allocation of heap storage is sensitive to the AMODE setting of the requester and the main program. If the requester is in AMODE(31) or HEAP(,,ANYWHERE) is in effect and the main program is in AMODE(31), heap storage is allocated above the 16 MB line.

There are some restrictions when using CEEGTST, the Get Heap Storage AWI, in an AMODE(24) COBOL program. See the description of CEEGTST in *z/OS Language Environment Programming Reference* for details on these restrictions.

Tuning heap storage

For best performance, the initial heap segment should be large enough to satisfy all requests for heap storage. The Language Environment storage report generated by the RPTSTG(ON) runtime option (see *z/OS Language Environment Programming Reference*) shows you how much heap storage is being used, the total number of segments allocated to the heap, the statistics for the optional heap pools algorithm, and the recommended values for the HEAP, ANYHEAP, BELOWHEAP and HEAPPOOLS runtime options. For PL/I multitasking applications, the Language Environment THREADHEAP runtime option can be used to tune heap storage at the task level.

The heap pools algorithm (see “Using HEAPPOOLS to improve performance” on page 174) can be used to significantly increase the performance of heap storage allocation, especially in a multi-threaded application that experiences contention for heap storage. However, if the algorithm is not properly tuned, heap storage could be used inefficiently.

Tuning the heap pools algorithm for an application is a three-step process:

1. Run your application with the runtime options HEAPPOOLS(ON) or HEAPPOOLS(ALIGN) as appropriate using the following cell sizes and percentages:

   ```
   (8,10,32,10,128,10,256,10,1024,10,2048,10,3072,1,4096,1,
   8192,1,16384,1,32768,1,65536,1)
   ```

   and RPTSTG(ON) for some time with a representative application workload. It may be necessary for the application to increase the region size.
2. Change the cell sizes in the HEAPPOOLS runtime option to the "Suggested Cell Sizes" from the first run. Re-run the application with a representative workload, using the default percentages in the HEAPPOOLS option. Examine the storage report.
3. The values listed as "Suggested Percentages for Current Cell Sizes" are the recommended values to minimize storage usage. These values should be evaluated prior to finalizing cell pool sizes.

Any time there is a significant change in the workload, repeat these tuning steps to obtain optimal HEAPPOOLS values.

RPTSTG(ON) and the STORAGE runtime option (see *z/OS Language Environment Programming Reference*) can have a negative affect on the performance of your application. Therefore, always use the IBM-supplied default setting RPTSTG(OFF) when running production jobs. Use RPTSTG(ON) and STORAGE(xx,xx,xx) only to debug applications.

Usage notes:

1. These recommendations are dynamic and represent values for this particular run. The values might change with each run performed.
2. Long-running applications might have an adverse effect on the statistical data collection. Fixed length counters might overflow, causing incorrect HEAPPOOLS recommendations. If the recommendations appear to be unrealistic, rerun with a reduced application run time.

Storage performance considerations

Use the RPTSTG(ON) option to generate a report about the amount of storage your application uses in various Language Environment storage classes (such as STACK, THREADSTACK, LIBSTACK, THREADHEAP, HEAP, HEAPPOOLS and BELOWHEAP). You can also use the report to determine your application's minimum storage requirements and the number of segments allocated and freed, and the manner in which heap pool cells are being used. You can use this information to tune your application to minimize the number of segments allocated and freed, and to increase the efficiency of the heap pools algorithm. Before putting your application into production, be sure to specify the RPTSTG(OFF) option so that no storage report is generated. RPTSTG(ON) can have a negative affect on the performance of your application, because as the application runs, statistics are kept on storage requests.

Dynamic storage services

Language Environment provides callable services that let you get and free heap storage at selected points in your application. Stack storage is automatically allocated upon entry into a routine and freed upon exit, but you must allocate heap storage, which persists until you free it or until your application terminates.

Each time your application runs, the setting of the HEAP runtime option specifies the size of an initial heap from which heap storage is allocated. You can allocate storage out of this initial heap whenever your application requires it. Call CEEGTST (Get Heap Storage) and specify an ID identifying the initial heap and the portion of storage in the initial heap that you require. When your application no longer requires the storage, you can call the CEEFRST (Free Heap Storage) service with the address of the element to free it.

CEECRHP (Create New Additional Heap) allows you to identify a heap, other than the initial heap, from which to get and free storage. You can use CEEGTST to allocate elements from the newly created heap. One advantage of this approach is that CEECRHP allows you to group storage elements together and to use CEEDSHP (Discard Heap) to discard them all at once when you no longer need them.

For a description and syntax of each Language Environment dynamic storage callable service, see *z/OS Language Environment Programming Reference*.

Callable services are not supported directly from a Fortran program. For information about invoking callable services from assembler routines, see Chapter 29, "Assembler considerations," on page 439.

Examples of callable storage services

This topic contains examples that use callable services. The first group of examples use CEEGTST and CEEFRST to build a linked list. The second group of examples use CEE3RHP, CEECRHP, CEEGTST, CEECZST, CEEFRST, and CEEDSHP to manage storage.

C example of building a linked list

Following is an example of how to build a linked list in a C program using callable services.

```
/*Module/File Name: EDCLLST   */
 /*****************************************************************
  **                                                              *
  **FUNCTION       : CEEGTST - obtain storage from user heap     *
  **                           for a linked list.                 *
  **               : CEEFRST - free linked list storage          *
  **                                                              *
  **   This example illustrates the construction of a linked     *
  **   list using the Language Environment storage management    *
  **   services.                                                  *
  **                                                              *
  **                                                              *
  **   1.  Storage for each list element is allocated from the   *
  **       user heap.                                             *
  **                                                              *
  **   2.  The list element is initialized and appended to the   *
  **       list.                                                  *
  **                                                              *
  **   3.  After three members are appended, the list traversed  *
  **       and the count saved in each element is displayed.      *
  **                                                              *
  **   4.  The linklist storage is freed.                        *
  **                                                              *
  *****************************************************************/
#include <stdio.h>
#include <string.h>
#include <stdlib.h>
#include <leawi.h>
```

```
#include <ceeedcct.h>
void main ()
{
  _INT4 HEAPID;
  _INT4 HPSIZE;
  _INT4 LCOUNT;
  _FEEDBACK FC;
  _POINTER ADDRSS;
  struct LIST_ITEM
       { _INT4 COUNT;
         struct LIST_ITEM *NEXT_ITEM;
       } ;
  struct LIST_ITEM *ANCHOR;
  struct LIST_ITEM *CURRENT;
  _INT4 NBYTES = sizeof(struct LIST_ITEM);

  printf ( "\n**********************************\n");
  printf ( "\nCESCSTO C Example is now in motion\n");
  printf ( "\n**********************************\n");
  ANCHOR = NULL;

  for ( LCOUNT = 1; LCOUNT < 4; LCOUNT++)
    {
     /*******************************************************
      * Call CEEGTST to get storage from user heap          *
      *******************************************************/
     CEEGTST ( &HEAPID , &NBYTES , &ADDRSS , &FC );
     if ( (_FBCHECK (FC , CEE000) == 0) && ADDRSS != 0 )
       /*  ********************************************
        *  If storage is gotten successfully, the linked  *
        *  list elements are pointed to by the pointer    *
        *  variable CURRENT. Append element to the end of *
        *  the list. The list origin is pointed to by the *
        *  variable ANCHOR.                               *
        *  ********************************************/
       {
         if (ANCHOR == NULL)
           {
             ANCHOR =(struct LIST_ITEM *) ADDRSS;
           }else{
             CURRENT -> NEXT_ITEM =(struct LIST_ITEM *)ADDRSS;
           }
           CURRENT =(struct LIST_ITEM *) ADDRSS;
           CURRENT -> NEXT_ITEM = NULL;
           CURRENT -> COUNT = LCOUNT;
       }else{
         printf ( "Error in getting user storage\n" );
       }
     }
     /*******************************************************
      *  On completion of the above loop, we have the         *
      *  following layout:                                    *
      *                                                       *
      *  ANCHOR  -->  LIST-ITEM1 --> LIST-ITEM2 --> LIST-ITEM3*
      *                                                       *
      *  Loop thru list items 1 thru 3 and print out the      *
      *  identifying item number saved in the COUNT field.    *
      *                                                       *
      *  Test the LCOUNT variable to verify that three items  *
      *  were indeed in the linked list.                      *
      *******************************************************/
  CURRENT = ANCHOR;
  while (CURRENT)
    {
      printf("This is list item %d\n", CURRENT->COUNT) ;
      ADDRSS = CURRENT;
      LCOUNT = CURRENT -> COUNT;
```

```
      CURRENT = CURRENT -> NEXT_ITEM;
      /*****************************************************
       * Call CEEFRST to free this piece of storage         *
       *****************************************************/
      CEEFRST ( &ADDRSS , &FC );
      if ( _FBCHECK (FC , CEE000) == 0 )
        {
        }else{
           printf ( "Error freeing storage from heap\n" );
        }
    }
   if (LCOUNT == 3)
    {
     printf ( "\n*******************************\n" );
     printf ( "\nC/370 linked list example ended.\n" );
     printf ( "\n*******************************\n" );
     exit(0);
    }else{
     printf ( "Error in constructing linked list\n" );
    }
  exit(-1);
}
```

COBOL example of building a linked list

Following is an example of how to build a linked list in a COBOL program using callable services.

```
 CBL C,LIB,RENT,LIST,QUOTE
      *Module/File Name: IGZTLLST
      ****************************************************************
      **                                                            *
      ** CESCSTO - Drive CEEGTST - obtain storage from user heap    *
      **                           for a linked list.               *
      **           and   CEEFRST - free linked list storage         *
      **                                                            *
      **   This example illustrates the construction of a linked    *
      **   list using the LE storage management services.           *
      **                                                            *
      **                                                            *
      **   1.  Storage for each list element is allocated from the  *
      **       user heap,                                           *
      **                                                            *
      **   2.  The list element is initialized and appended to the  *
      **       list.                                                *
      **                                                            *
      **   3.  After three members are appended, the list traversed *
      **       and the data saved in each element is displayed.     *
      **                                                            *
      **   4.  The linklist storage is freed.                      *
      **                                                            *
      ****************************************************************
       IDENTIFICATION DIVISION.
       PROGRAM-ID. CESCSTO.
       DATA DIVISION.
      *****************************************************
      ** Storage management parameters, including pointers **
      ** for the returned storage addresses.              **
      *****************************************************
       WORKING-STORAGE SECTION.
       01  LCOUNT                  PIC 9 USAGE DISPLAY VALUE 0.
       01  HEAPID                  PIC S9(9) BINARY VALUE 0.
       01  NBYTES                  PIC S9(9) BINARY.
       01  FC.
           05  FILLER              PIC X(8).
           COPY CEEIGZCT.
           05  FILLER              PIC X(4).
```

```
 01  ADDRSS USAGE IS POINTER VALUE NULL.
 01  ANCHOR USAGE IS POINTER VALUE NULL.
*********************************************************
** Define variables in linkage section in order to   **
** reference storage returned as addresses in        **
** pointer variables by Language Environment.        **
*********************************************************
 LINKAGE SECTION.
 01  LIST-ITEM.
     05  CHARDATA            PIC X(80) USAGE DISPLAY.
     05  NEXT-ITEM USAGE IS  POINTER.
 PROCEDURE DIVISION.
 0001-BEGIN-PROCESSING.
     DISPLAY "***************************************".
     DISPLAY "CESCSTO COBOL Example is now in motion.".
     DISPLAY "***************************************".
*********************************************************
**  Call CEEGTST to get storage from user heap       **
*********************************************************
     MOVE LENGTH OF LIST-ITEM TO NBYTES
     PERFORM 3 TIMES
       ADD 1 TO LCOUNT
       CALL "CEEGTST" USING HEAPID , NBYTES,
                      ADDRSS , FC
*********************************************************
** If storage storage is gotten successfully, an     **
** address is returned by LE in the ADDRSS           **
** parameter. The address of variable LIST-ITEM      **
** in the linkage section can now be SET to address  **
** the acquired storage. LIST-ITEM is appended to    **
** the end of the list. The list origin is pointed   **
** to by the variable ANCHOR.                        **
*********************************************************
       IF CEE000 THEN
           IF ANCHOR = NULL THEN
               SET ANCHOR TO ADDRSS
           ELSE
               SET NEXT-ITEM TO ADDRSS
           END-IF
           SET ADDRESS OF LIST-ITEM TO ADDRSS
           SET NEXT-ITEM TO NULL
           MOVE " " TO CHARDATA
           STRING "This is list item number " LCOUNT
               DELIMITED BY SIZE INTO CHARDATA
       ELSE
           DISPLAY "Error in obtaining storage from heap"
           GOBACK
       END-IF
     END-PERFORM.
*********************************************************
** On completion of the above loop, we have the        **
** following layout:                                   **
**                                                     **
** ANCHOR --> LIST-ITEM1 --> LIST-ITEM2 --> LIST-ITEM3 **
**                                                     **
** Loop thru list items 1 thru 3 and print out the     **
** identifying text written in the CHARDATA fields.    **
**                                                     **
** Test a counter variable to verify that three items  **
** were indeed in the linked list.                     **
*********************************************************
     MOVE 0 TO LCOUNT.
     PERFORM WITH TEST AFTER UNTIL (ANCHOR = NULL)
       SET ADDRESS OF LIST-ITEM TO ANCHOR
       DISPLAY CHARDATA
       SET ADDRSS TO ANCHOR
       SET ANCHOR TO NEXT-ITEM
```

```
            PERFORM 100-FREESTOR
            ADD 1 TO LCOUNT
          END-PERFORM.
          IF (LCOUNT = 3 )
            THEN
              DISPLAY "************************************"
              DISPLAY "CESCSTO COBOL Example is now ended.   "
              DISPLAY "************************************"
            ELSE
              DISPLAY "Error in List contruction ."
          END-IF.

          GOBACK.
       100-FREESTOR.
      *********************************************************
      *     Call CEEFRST to free this storage from user heap **
      *********************************************************
          CALL "CEEFRST" USING ADDRSS , FC.
          IF CEE000 THEN
              NEXT SENTENCE
          ELSE
              DISPLAY "Error freeing storage from heap"
          END-IF.
```

PL/I example of building a linked list

Following is an example of how to build a linked list in an Enterprise PL/I for z/OS or PL/I for MVS & VM program using callable services.

```
*PROCESS MACRO;
*Process lc(101),opt(0),s,map,list,stmt,a(f),ag         ;
 CESCSTO: PROC OPTIONS(MAIN);

    %INCLUDE  CEEIBMAW;
    %INCLUDE  CEEIBMCT;
    /*************************************************/
    /*Module/File Name: IBMLLST                      */
    /*************************************************/
    /**                                             **/
    /** FUNCTION : CEEGTST - obtain storage from user  **/
    /**                      heap for a linked list.   **/
    /**          : CEEFRST - free linked list storage  **/
    /**                                             **/
    /**   This example illustrates the construction of **/
    /**   a linked list using the Language Environment **/
    /**   storage management services.              **/
    /**                                             **/
    /**   1.  Storage for each list element is      **/
    /**       allocated from the user heap,         **/
    /**                                             **/
    /**   2.  The list element is initialized and   **/
    /**       appended to the list.                 **/
    /**                                             **/
    /**   3.  After three members are appended, the    **/
    /**       list traversed and the data saved in     **/
    /**       each element is displayed.               **/
    /**                                             **/
    /**   4.  The linklist storage is freed.          **/
    /**                                              **/
    /*************************************************/
    /*************************************************/
    DCL NULL BUILTIN;
    /*************************************************/
    /*  Storage management parameters, including     */
    /*  pointers for the returned storage addresses.    */
    /*************************************************/
    DCL HEAPID FIXED BIN(31,0) INIT (0);  /* heap ID for user heap */
```

```
DCL NBYTES FIXED BIN(31,0)            /* size of required heap */
          INIT (STORAGE(LIST_ITEM));
DCL 01 FC,                        /* Feedback token */
       03 MsgSev    REAL FIXED BINARY(15,0),
       03 MsgNo     REAL FIXED BINARY(15,0),
       03 Flags,
          05 Case      BIT(2),
          05 Severity  BIT(3),
          05 Control   BIT(3),
       03 FacID     CHAR(3),    /* Facility ID */
       03 ISI                   /* Instance-Specific Information */
                    REAL FIXED BINARY(31,0);
DCL ADDRSS POINTER,        /* Address of storage    */
    PREV   POINTER;        /* Address of prior item */
DCL ANCHOR POINTER;        /* linklist anchor      */
/*****************************************************/
/*  Declare linked list item as based structure.    */
/*****************************************************/
DCL 01 LIST_ITEM BASED(ADDRSS), /* Map of list item */
       02  CHARDATA CHAR(80),
       02  NEXT_ITEM POINTER;
PUT SKIP LIST('****************************************');
PUT SKIP LIST('PL/I linked list example is now in motion');
PUT SKIP LIST('****************************************');
ANCHOR = NULL;
DO LCOUNT = 1 TO 3;
   /*****************************************************/
   /*   Call CEEGTST to get storage from user heap.    */
   /*****************************************************/
   CALL CEEGTST ( HEAPID, NBYTES, ADDRSS, FC );
   IF  FBCHECK( FC, CEE000)  THEN  DO;

      /*********************************************/
      /* If storage is obtained successfully, the   */
      /* linked list elements are based on the      */
      /* address of the storage obtained.  Append   */
      /* element to end of list. The  list origin   */
      /* is pointed to by the variable ANCHOR.      */
      /*********************************************/
      IF ( ANCHOR = NULL )  THEN
          ANCHOR = ADDRSS;
      ELSE
         PREV ->NEXT_ITEM = ADDRSS;
      NEXT_ITEM = NULL;
      CHARDATA = 'This is list item number ' || LCOUNT;
      PREV = ADDRSS;
      END;
   ELSE  DO;
      PUT SKIP LIST ( 'Error ' || FC.MsgNo
         || ' in getting user storage' );
      STOP;
      END;
   END;
/*****************************************************/
/*  On completion of the above loop, we have the     */
/*  following layout:                                */
/*                                                   */
/*  ANCHOR -> LIST_ITEM1 -> LIST_ITEM2 -> LIST_ITEM3 */
/*                                                   */
/*  Loop thru list items 1 thru 3 and print out the  */
/*  identifying text written in the CHARDATA fields. */
/*                                                   */
/*  Test a counter variable to verify that three     */
/*  items were indeed in the linked-list.            */
/*****************************************************/
ADDRSS = ANCHOR;
LCOUNT = 0;
```

```
   DO UNTIL (ADDRSS = NULL);

      PUT SKIP LIST(CHARDATA);
      /*********************************************/
      /*   Call CEEFRST to free this piece of storage. */
      /*********************************************/
      CALL CEEFRST ( ADDRSS, FC );
      IF  FBCHECK( FC, CEE000)  THEN  DO;
         LCOUNT = LCOUNT + 1;
         END;
      ELSE  DO;
         PUT SKIP LIST ( 'Error' || FC.MsgNo
            || ' freeing storage from heap');
         STOP;
         END;
      ADDRSS = NEXT_ITEM;
      END;
   IF  LCOUNT = 3  THEN  DO;
      PUT SKIP LIST('************************************');
      PUT SKIP LIST('PL/I linked list example is now ended.');
      PUT SKIP LIST('************************************');
      END;

END CESCSTO;
```

C example of storage management

Following is an example of how to manage storage for a C program using callable services.

```
/*Module/File Name: EDCSTOR                                        */
/*******************************************************************/
/*                                                                 */
/* Function   : CEE3RPH - Set report heading                       */
/*            : CEECRHP - Create user heap                         */
/*            : CEEGTST - Obtain storage from user heap            */
/*            : CEECZST - Change size of this piece of storage     */
/*            : CEEFRST - Free this piece of storage               */
/*            : CEEDSHP - Discard user heap                        */
/*                                                                 */
/*    This example illustrates the invocation of the Language      */
/*    Environment Dynamic Storage Callable Services for a          */
/*    C program                                                    */
/*    1.  A report heading is set for display at the beginning     */
/*        of the storage or options report.                        */
/*                                                                 */
/*    2.  A user heap is created.                                  */
/*                                                                 */
/*    3.  Storage is allocated from the user heap.                 */
/*                                                                 */
/*    4.  A change is made to the size of the allocated storage.   */
/*                                                                 */
/*    5.  The allocated storage is freed.                          */
/*                                                                 */
/*    6.  The user heap is discarded.                              */
/*                                                                 */
/*******************************************************************/
#include <stdio.h>
#include <string.h>
#include <stdlib.h>
#include <leawi.h>
#include <ceeedcct.h>
void main ()
{
  _CHAR80 RPTHEAD;
  _INT4 HEAPID;
  _INT4 HPSIZE;
```

```
_INT4 NBYTES;
_INT4 INCR;
_INT4 OPTS;
_INT4 STORALC;
_POINTER ADDRSS;
_FEEDBACK FC;
printf ( "\n*********************************\n");
printf ( "\nCE90STO C Example is now in motion\n");
printf ( "\n*********************************\n");
memset ( RPTHEAD , ' ' , 80 );
memcpy ( RPTHEAD , "User defined report heading" , 27 );
/*******************************************************
 * Call CEE3RPH to set the user defined report heading *
 *******************************************************/
CEE3RPH ( RPTHEAD , &FC );
if ( _FBCHECK ( FC , CEE000 ) != 0 )
    printf ( "Error in setting report heading\n" );
/*******************************************************
 * Call CEECRHP to create a user heap                  *
 *******************************************************/
HEAPID = 0;
HPSIZE = 1;
INCR = 0;
OPTS = 0;
STORALC = 0;
CEECRHP ( &HEAPID , &HPSIZE , &INCR , &OPTS , &FC );
if ( _FBCHECK ( FC , CEE000 ) == 0 )
  {
  /*******************************************************
   * Call CEEGTST to get storage from user heap          *
   *******************************************************/
  NBYTES = 4000;
  CEEGTST ( &HEAPID , &NBYTES , &ADDRSS , &FC );
  if ( ( _FBCHECK ( FC , CEE000 ) == 0 ) && ADDRSS != 0 )
    {
    /*******************************************************
     * Call CEECZST to change size of heap element         *
     *******************************************************/
    NBYTES = 2000;
    CEECZST ( &ADDRSS , &NBYTES , &FC );
    if ( _FBCHECK ( FC , CEE000 ) == 0 )
      {
        STORALC = 1;
      }else{
        printf ( "Error in changing size of storage\n");
    }
    }else{
      printf ( "Error in getting user storage\n" );
  }
  }else{
    printf ( "Error in creating user heap\n" );
}
if (STORALC != 0)
 {
 /*******************************************************
  * Call CEEFRST to free this piece of storage          *
  *******************************************************/
 CEEFRST ( &ADDRSS , &FC );

 if ( _FBCHECK ( FC , CEE000 ) == 0 )
   {
   /*******************************************************
    * Call CEEDSHP to discard user heap                   *
    *******************************************************/
    CEEDSHP ( &HEAPID , &FC );
    if ( _FBCHECK ( FC , CEE000 ) == 0 )
      {
```

```
        printf ( "C/370 Storage Example ended\n" );
        exit(0);
      }else{
        printf ( "Error discarding user heap\n" );
     }
     }else{
       printf ( "Error freeing storage from heap\n" );
    }
  }
  exit(-1);
}
```

COBOL example of storage management

Following is an example of how to manage storage for a COBOL program using callable services.

```
CBL LIB,QUOTE
      *Module/File Name: IGZTSTOR
      ************************************************************
      ** CE90STO - Call the following LE services:
      **           : CEE3RPH - Set report heading
      **           : CEECRHP - Create user heap
      **           : CEEGTST - obtain storage from user heap
      **           : CEECZST - change size of this piece of storage
      **           : CEEFRST - free this piece of storage
      **           : CEEDSHP - discard user heap
      **   This example illustrates the invocation of the LE
      **   Dynamic Storage Callable Services from a COBOL program.
      **   1.  A report heading is set for display at the beginning
      **       of the storage or options report.
      **   2.  A user heap is created.
      **   3.  Storage is allocated from the user heap.
      **   4.  A change is made to the size of the allocated storage.
      **   5.  The allocated storage is freed.
      **   6.  The user heap is discarded.
      ************************************************************
       IDENTIFICATION DIVISION.
       PROGRAM-ID. CE90STO.
       DATA DIVISION.
       WORKING-STORAGE SECTION.
       01  RPTHEAD                 PIC X(80).
       01  HEAPID                  PIC S9(9) BINARY.
       01  HPSIZE                  PIC S9(9) BINARY.
       01  INCR                    PIC S9(9) BINARY.
       01  OPTS                    PIC S9(9) BINARY.
       01  ADDRSS                  USAGE IS POINTER.
       01  NBYTES                  PIC S9(9) BINARY.
       01  NEWSIZE                 PIC S9(9) BINARY.
       01  FC.
           02  Condition-Token-Value.
           COPY  CEEIGZCT.
               03  Case-1-Condition-ID.
                   04  Severity    PIC S9(4) BINARY.
                   04  Msg-No      PIC S9(4) BINARY.
               03  Case-2-Condition-ID
                         REDEFINES Case-1-Condition-ID.
                   04  Class-Code  PIC S9(4) BINARY.
                   04  Cause-Code  PIC S9(4) BINARY.
               03  Case-Sev-Ctl    PIC X.
               03  Facility-ID     PIC XXX.
           02  I-S-Info            PIC S9(9) BINARY.
       PROCEDURE DIVISION.
       0001-BEGIN-PROCESSING.
           DISPLAY "****************************************".
           DISPLAY "CE90STO COBOL Example is now in motion.".
           DISPLAY "****************************************".
```

```
     MOVE "User defined report heading" TO RPTHEAD.
*************************************************************
*   Call CEE3RPH to set the user defined report heading
*************************************************************
     CALL "CEE3RPH" USING RPTHEAD, FC.
     IF NOT CEE000 THEN
         DISPLAY "Error in setting Report Heading"
         GOBACK
     END-IF.
*************************************************************
*   Call CEECRHP to create a user heap
*************************************************************
     MOVE 0 TO HEAPID.
     MOVE 1 TO HPSIZE.
     MOVE 0 TO INCR.
     MOVE 0 TO OPTS.
     CALL "CEECRHP" USING HEAPID, HPSIZE, INCR, OPTS, FC.
     IF CEE000 of FC THEN
*************************************************************
*        Call CEEGTST to get storage from user heap
*************************************************************
         MOVE 4000 TO NBYTES
         CALL "CEEGTST" USING HEAPID, NBYTES, ADDRSS, FC
         IF CEE000 of FC THEN
*************************************************************
*            Call CEECZST to change the size of heap element
*************************************************************
             MOVE 2000 TO NEWSIZE
             CALL "CEECZST" USING ADDRSS, NEWSIZE, FC
             IF CEE000 of FC THEN
                 PERFORM 100-FREE-ALL
                 DISPLAY "COBOL Storage example pgm ended"
             ELSE
                 DISPLAY "Error in changing size of storage"
             END-IF
         ELSE
             DISPLAY "Error in obtaining storage from heap"
         END-IF
     ELSE
         DISPLAY "Error in creating user heap"
     END-IF.

     GOBACK.

 100-FREE-ALL.
*************************************************************
*     Call CEEFRST to free this storage from user heap
*************************************************************
     CALL "CEEFRST" USING ADDRSS, FC.
     IF CEE000 of FC THEN
*************************************************************
*        Call CEEDSHP to discard user heap
*************************************************************
         CALL "CEEDSHP" USING HEAPID, FC
         IF CEE000 THEN
             NEXT SENTENCE
         ELSE
             DISPLAY "Error discarding user heap"
         END-IF
     ELSE
         DISPLAY "Error freeing storage from heap"
     END-IF.
```

PL/I example of storage management

Following is an example of how to manage storage for an Enterprise PL/I for z/OS or a PL/I for MVS & VM program using callable services.

```
*PROCESS MACRO;
 CE90STO: PROC OPTIONS(MAIN);

    %INCLUDE  CEEIBMAW;
    %INCLUDE  CEEIBMCT;
 /*******************************************************/
 /*Module/File Name: IBMSTOR                            */
 /*******************************************************/
 /* FUNCTION : CEE3RPH - set report heading             */
 /*          : CEECRHP - create user heap               */
 /*          : CEEGTST - obtain storage from user heap  */
 /*          : CEEZCST - change size of storage block   */
 /*          : CEEFRST - free this piece of storage     */
 /*          : CEEDSHP - discard user heap              */
 /*  This example illustrates the use of the Language   */
 /*  Environment storage callable services in a PL/I    */
 /*  program.                                           */
 /*                                                     */
 /*  1.  A report heading is set for display at the     */
 /*      beginning of the storage or options report.    */
 /*  2.  A user heap is created.                        */
 /*  3.  Storage is allocated from the user heap.       */
 /*  4.  The size of allocated storage is changed.      */
 /*  5.  The allocated storage is freed.                */
 /*  6.  The user heap is discarded.                    */
 /*                                                     */
 /*******************************************************/

    DCL NULL    BUILTIN;
    DCL ADDRESS PTR  INIT(NULL); /* ADDRESS OF STORAGE    */
    DCL NEWSIZE REAL FIXED BINARY(31,0)
                     INIT(2000); /* NEW STORAGE SIZE      */
    DCL RPTHEAD CHAR(80)
                     INIT('USER DEFINED REPORT HEADING');
    DCL HEAPID  REAL FIXED BINARY(31,0)
                     INIT(0);    /* HEAP ID FOR CEECRHP   */
    DCL HPSIZE  REAL FIXED BINARY(31,0)
                     INIT(1);    /* HEAP SIZE FOR CEECRHP */
    DCL INCR    REAL FIXED BINARY(31,0)
                     INIT(0);    /* HEAP INCREMENT        */
    DCL NBYTES  REAL FIXED BINARY(31,0)
                     INIT(4000); /* SIZE OF REQUIRED HEAP */
    DCL 01 FC,                   /* Feedback token */
           03 MsgSev    REAL FIXED BINARY(15,0),
           03 MsgNo     REAL FIXED BINARY(15,0),
           03 Flags,
              05 Case      BIT(2),
              05 Severity  BIT(3),
              05 Control   BIT(3),
           03 FacID     CHAR(3),    /* Facility ID */
           03 ISI                   /* Instance-Specific Information */
                        REAL FIXED BINARY(31,0);

    DCL OPTS    REAL FIXED BINARY(31,0)
                     INIT(0);    /* HEAP OPTIONS          */
    PUT SKIP LIST('PL/I Storage example is now in motion');

    /*************************************************/
    /* Call CEE3RPH to set user defined report heading  */
    /*************************************************/
    CALL CEE3RPH ( RPTHEAD, FC );
    IF  ^ FBCHECK( FC, CEE000)  THEN  DO;
       PUT SKIP LIST ( 'Error ' || FC.MsgNo
          || ' in setting Report Heading');
       STOP;
       END;
    /*************************************************/
```

```
   /* Call CEECRHP to create user heap                */
   /*************************************************/
   CALL CEECRHP ( HEAPID, HPSIZE, INCR, OPTS, FC );
   IF  FBCHECK( FC, CEE000)  THEN  DO;
      /**********************************************/
      /* Call CEEGTST to get storage from user heap  */
      /**********************************************/
      CALL CEEGTST ( HEAPID, NBYTES, ADDRESS, FC );
      IF  FBCHECK( FC, CEE000)  THEN  DO;
         /*******************************************/
         /* Call CEECZST to change the size of block */
         /*******************************************/
         CALL CEECZST ( ADDRESS, NEWSIZE, FC );
         IF  FBCHECK( FC, CEE000)  THEN  DO;
            CALL FREE_ALL;
            PUT SKIP LIST ( 'PL/I Storage Example program ended');
            END;
         ELSE  DO;
            PUT SKIP LIST('Error ' || FC.MsgNo
               || ' in changing size of storage');
            STOP;
            END;
         END;
      ELSE  DO;
         PUT SKIP LIST( 'Error ' || FC.MsgNo
            || ' in getting user storage' );
         STOP;
         END;
      END;
   ELSE  DO;
      PUT SKIP LIST ('Error' || FC.MsgNo
         || ' in creating user heap');
      STOP;
      END;

   /* Logical end of Main program CE90STO */
FREE_ALL:  PROC;

   /*************************************************/
   /* Call CEEFRST to free this piece of storage    */
   /*************************************************/
   CALL CEEFRST ( ADDRESS, FC );
   IF  FBCHECK( FC, CEE000)  THEN  DO;
      /**********************************************/
      /*   Call CEEDSHP to discard user heap        */
      /**********************************************/
      CALL CEEDSHP ( HEAPID, FC );
      IF  ^ FBCHECK( FC, CEE000)  THEN  DO;
         PUT SKIP LIST ( 'Error ' || FC.MsgNo
            || ' discarding user heap');
         STOP;
         END;
      END;
   ELSE  DO;
      PUT SKIP LIST ( 'Error ' || FC.MsgNo
         || ' freeing storage from heap');
      STOP;
      END;

END FREE_ALL;

END CE90STO;
```

User-created heap storage

Language Environment can also manage, as a heap, storage which is obtained by a C/C++ application. The following functions provide this user-created heap storage capability:

- `_ucreate()` – Creates a heap using storage provided by the caller
- `_umalloc()` – Allocates storage elements from the user-created heap
- `_ufree()` – Returns storage elements to the user-created heap
- `_uheapreport()` – Generates a storage report to assist in tuning the application's use of the user-created heap

This allows the application more flexibility in choosing the attributes of the heap storage. For instance, the storage could be shared memory that is accessed by multiple programs.

For more information about the user-created heap functions, see *z/OS XL C/C++ Runtime Library Reference*.

Alternative Vendor Heap Manager

Language Environment provides a mechanism such that a vendor can provide an alternative Vendor Heap Manager (VHM) that can be used by Language Environment C/C++ applications. The VHM replaces the malloc() (default operator new and default operator new [ ] are included), free() (default operator delete and default operator delete [ ] are included), calloc() and realloc() functions for non-XPLINK and XPLINK.

The VHM will not manage the following:

- CEEGTST
- CEEVGTST
- CEEFRST
- CEEVFRST
- CEECZST
- CEEVCZST
- CEEVGTSB
- Additional heaps (CEECRHP)
- User-created heaps (__ucreate, __umalloc, __ufree)
- ANYHEAP
- BELOWHEAP

Using _CEE_HEAP_MANAGER to invoke the alternative Vendor Heap Manager

This environment variable is set by the end-user or the application to indicate that the Vendor Heap Manager (VHM), identified by the *dllname*, is to be used to manage the user heap. The format of the environment variable is:

```
_CEE_HEAP_MANAGER=dllname
```

Note: This environment variable must be set using one of the following mechanisms:

- ENVAR runtime option
- Inside the file specified by the _CEE_ENVFILE environment variable

- Inside the file specified by the _CEE_ENVFILE_S environment variable. _CEE_ENVFILE_S will enable a list of environment variables to be set from a specified file and will also strip trailing *white space* from each name=value line read from a file.

You must set the environment variable before any user code obtains control; that is, before the HLL user exit, static constructors, or main obtains control. If you set it after the user code has begun executing, the VHM will not be activated but the value of the environment variable will be updated.

Chapter 15. Introduction to Language Environment condition handling

This section outlines the Language Environment condition handling model in a POSIX(OFF) environment. It describes what constitutes a condition in Language Environment and how Language Environment supplements existing HLL condition handling methods. It also presents several condition handling scenarios to demonstrate how Language Environment condition handling works.

If you use mixed-language applications, it is especially important for you to know how Language Environment condition handling works with existing high-level language (HLL) condition handling schemes.

Described in detail later in this section are the steps involved in condition handling under Language Environment, HLL-specific condition handling considerations, Language Environment—POSIX signal handling interactions, and how you can communicate events that happen in a routine to another routine.

If your application is running under CICS, you should refer to the CICS-specific condition handling information, which is discussed in "Condition handling under CICS" on page 406. If your application is running under IMS, you should refer to the IMS-specific condition handling information, which is discussed in "Condition handling under IMS" on page 417.

Concepts of Language Environment condition handling

There are two main concepts of Language Environment condition handling: the stack frame-based model and the unique, 12-byte condition token that it provides to communicate information about conditions to Language Environment resources and services.

Language Environment uses stack frames to keep track of a routine's order of execution, and the condition handlers available for each routine. This ensures that conditions can be isolated and handled precisely where they occur in a routine.

One of the most useful features of the condition handling model is the condition token: a 12-byte data type that contains information about each condition. You can use the condition token as a feedback code or to communicate with Language Environment message services. Unlike a return code, which is specific to the caller and callee of a routine, a condition token communicates between all the routines involved in an application. A condition token contains more instance-specific information about a condition than a return code does.

Language Environment supplements, but does not replace, existing HLL condition handling techniques such as C/C++ *signal handlers* (created using the `signal()` function), PL/I ON-units, and return code-based programming techniques. HLL condition handling techniques are discussed in Chapter 16, "Language Environment and HLL condition handling interactions," on page 211.

Language Environment condition handling is most beneficial when used as part of mixed-language applications because it is consistent for all applications. If you are coding in a single language, you can use the condition handling semantics of that

© Copyright IBM Corp. 1991, 2015

language, but if you have any ILC applications, you need the consistency across languages that Language Environment provides.

Language Environment can respond in many ways to a condition. For example, Language Environment can invoke a *condition handler*, a term used to define the specific routine that actually recognizes and responds to the condition. A condition handler can be registered by the CEEHDLR (register user-written condition handler) service, or be part of the language-specific condition handling services, such as a C/C++ signal handler or a PL/I ON-unit. HLL condition handling semantics that are intrinsic to the programming language also exist; an example is the COBOL ON SIZE phrase.

Related runtime options are as follows:

ABPERC
Percolates (removes from Language Environment condition handling) a single abend

DEPTHCONDLMT
Indicates how deep conditions might be nested

ERRCOUNT
Indicates how many severity 2, 3, and 4 conditions can occur before issuing an abend.

TRAP Indicates whether Language Environment routines should handle abends and program interrupts.

XUFLOW
Indicates if exponent underflow should cause program interrupt.

Related callable services are as follows:

CEE3CIB
Returns pointer to the condition information block that is associated with a condition token passed to a user-written condition handler

CEE3GRN
Gets name of routine that incurred the condition currently being processed

CEE3GRO
Returns the offset of the location within the most current Language Environment-conforming routine where a condition occurred

CEE3SPM
Queries or modifies (by enabling or masking) hardware conditions

CEE3SRP
Sets a resume point within user application code to resume from a Language Environment user condition handler

CEEGQDT
Retrieves q_data token from the ISI

CEEHDLR
Registers user-written condition handler

CEEHDLU
Unregisters user-written condition handler

CEEITOK
Returns the initial condition token from the current condition information block

CEEMRCE
Moves the resume cursor to an explicit location where resumption is to occur after a condition has been handled

CEEMRCR
Moves resume cursor relative to handle cursor. You might view this as performing a GOTO out of block, or `setjmp()` and `longjmp()`.

CEESGL
Signals a condition

The stack frame model

A stack consists of an ordered set of stack elements, called stack frames, which are managed in a last-in first-out manner. Unqualified references to *stack* mean *invocation stack*. The invocation stack can contain multiple *invocation stack frames*, which represent invocation instances of routines. A stack frame is added to the stack on entry to a routine and removed from the stack on exit from the routine.

The Language Environment condition handling model is based on stack frames, in which condition handling can be different in different stack frames. Another condition handling model is global condition handling, which means that one condition handling mechanism remains in effect for the life of an application. The distinction between global condition handling and condition handling within a stack frame-based model can affect how a condition is handled in your application, particularly if it is a mixed-language application.

The following cause a stack frame to be added to the invocation stack:

- A function call in C or C++ that has not been inlined
- Entry into a program in COBOL
- Entry into a main program or subprogram in Fortran
- Entry into a procedure or begin block in PL/I
- Entry into an ON-unit in PL/I

A stack frame is added to the stack every time a new routine is entered and removed when it is exited. Language Environment uses stack frames to keep track of such things as the routine currently executing, the point at which an error occurs, and the point at which execution should resume after the condition is handled.

Each new stack frame can contain user-written condition handlers registered with CEEHDLR, but language-specific handlers such as C/C++ signal handlers are not associated with each stack frame. User condition handlers can be unregistered explicitly (by calling CEEHDLU) or implicitly, as when the routine that registered the handler returns control to its caller.

Two cursors, or pointers, keep track of the state of condition handling. The cursors are named the *handle* and *resume* cursors.

Handle cursor

If a condition occurs or is raised, the handle cursor initially points to the most recently established condition handler within the stack frame. As condition handling progresses, the handle cursor moves to earlier handlers within the stack frame, or to the first handler in the calling stack frame.

Resume cursor

The resume cursor generally points to the next sequential instruction where a routine would continue running if it were to resume. Initially, the resume cursor is positioned after the machine instruction that caused or signaled the condition. You can move the resume cursor relative to the handle cursor by calling CEEMRCR. You can use CEEMRCE to move the resume cursor to an explicit location in the application when the application resumes.

What is a condition in Language Environment?

Language Environment defines a *condition* as any event that can require the attention of a running application or the HLL routine supporting the application. A condition is also known as an exception, interrupt, or signal. Language Environment makes it possible to respond to events that in the past might have caused a routine to abend, including hardware-detected errors or operating system-detected errors.

All of the following can generate a condition in Language Environment:

Hardware-detected errors
Also known as program interruptions, these are signaled by the central processing unit. Examples are the fixed-overflow and addressing exceptions. The operating system derives the error codes from the codes defined for the machine on which the application is running. The error codes differ from machine to machine.

Operating system-detected errors
These are software errors and are reported as abends. An example is an OPEN error.

Software-generated signals
Signals are conditions intentionally and explicitly created by Language Environment (using CEESGL), language library routines, language constructs (such as C's `raise()` or PL/I's SIGNAL), or user-written condition handling routines.

Under Language Environment, an *exception* is the original event, such as a hardware signal, software-detected event, or user-signaled event, that is a potential condition. Through the enablement step (described briefly in "Steps in condition handling" and in detail in Chapter 16, "Language Environment and HLL condition handling interactions," on page 211), Language Environment might deem an exception to be a condition, at which point it can be handled by Language Environment, user-written condition handlers, if they are present, or HLL condition handling semantics.

Steps in condition handling

Language Environment condition handling is performed in three distinct steps: the enablement, condition, and termination imminent steps.

During the condition and termination imminent steps, the stack is used to determine the order of condition handler processing. Condition handlers associated with the most recent stack frame added to the stack are given first chance to handle the condition. Condition handlers associated with the next stack frame are next given a chance, and so on until either the condition is handled or default Language Environment condition handling semantics take effect.

In a POSIX(OFF) environment, only routines that are currently active on the stack have an effect on condition handling. For example, in a COBOL — PL/I application, a COBOL main program calls a PL/I subroutine. The subroutine then returns control to COBOL. The PL/I routine is no longer on the stack and does not affect condition handling. See "Language Environment and POSIX signal handling interactions" on page 230 for information about signal handling under z/OS UNIX.

Enablement step

Enablement refers to the determination that an exception should be processed as a condition. The enablement step begins at the time an exception occurs in your application. In general, you are not involved with the enablement step; Language Environment determines which exceptions should be enabled (treated as conditions) and which should be ignored, based on the languages currently active on the stack. If you do not specify explicitly or as a default any of the services or constructs discussed later in this section, the default enablement of your HLL applies.

If Language Environment ignores an exception, the exception is not seen as a condition and does not undergo condition handling. Processing resumes at the next sequential instruction.

You can affect the enablement of exceptions in the following ways:

- Set the TRAP runtime option to handle or ignore abends and program checks.

  See "TRAP effects on the condition handling process" for more information.
- Specify in the assembler user exit or ABPERC runtime option an abend code or list of codes to be percolated (passed to the operating system).

  See "Language Environment abends and the enablement step" on page 198 for more information.
- Disable specific conditions by doing one of the following:
  - Code a construct such as `signal(sigfpe, SIG_IGN)` in a C/C++ function or a PL/I NOZERODIVIDE prefix in a PL/I procedure to request that program checks (in this case divide-by-zero) be ignored if they occur in either routine. Execution continues at the next sequential instruction after the one that caused the divide-by-zero. Condition handlers never get a chance to handle the program check because it is not considered a condition.
  - Call the CEE3SPM callable service or use the XUFLOW runtime option to disable hardware conditions.

    See "Using CEE3SPM and XUFLOW to enable and disable hardware conditions" on page 199 for more information.

In summary, not all hardware interrupts, software conditions, or user-signaled events become conditions. Those that are not ignored and do become conditions enter the condition step. See "Condition step" on page 199 for the details of what takes place during the condition step.

TRAP effects on the condition handling process

The TRAP runtime option specifies how Language Environment handles abends and program interrupts; TRAP(ON,SPIE) is the IBM-supplied default. For more information about the TRAP runtime option, see *z/OS Language Environment Programming Reference*.

When TRAP(ON,SPIE) is in effect, Language Environment is notified of abends and program interrupts. Language semantics, C/C++ signal handlers, PL/I ON-units, and user-written condition handlers can then be invoked to handle

them. An exception to this behavior is that Language Environment cannot handle S*x*22 abends, even if TRAP(ON) is specified.

CEESGL and TRAP: When a condition is raised using the CEESGL callable service, C/C++ signal handlers, PL/I ON-units, and user-written condition handlers are always invoked if present, regardless of the setting of TRAP. If none of these handle the condition, then HLL semantics' default action could be taken. See *z/OS Language Environment Programming Reference* for more information about TRAP and CEESGL.

Language Environment abends and the enablement step

You can prevent Language Environment from automatically issuing abends for certain exceptions by requesting that an abend code or codes be percolated. If an abend is percolated, neither Language Environment nor an HLL can handle it; only the operating system can respond to the abend.

Abends that are not retryable (for example, x37 ABENDs) are always percolated.

Additionally, abends can be percolated in three ways:

- You can specify in the assembler user exit CEEXBITA a list of abend codes that Language Environment percolates. You can specify both system abends and user abends. See Chapter 28, “Using runtime user exits,” on page 421 for more information.
- The ABPERC runtime option allows you to specify which (if any) abend code should be percolated by Language Environment. ABPERC is intended for use as a debugging tool that allows the application to execute with TRAP(ON).

  For a list of Language Environment-issued abends and information about using ABPERC to debug your application, see *z/OS Language Environment Runtime Messages* and *z/OS Language Environment Debugging Guide*. See *z/OS Language Environment Programming Reference* for more information about the TRAP and ABPERC runtime options.
- If an abend is issued from a request block (RB) on which Language Environment did not establish an ESTAE, the abend will be percolated to the system.

  For example, COBOL is the main program, running on an RB, where Language Environment establishes an ESTAE. The COBOL application determines an error condition has occurred, and it calls an assembler program. This assembler program issues an SVC LINK to a non-Language Environment enabled assembler program, creating a new RB. Neither of these assembler programs establishes an ESTAE or an ESPIE. The assembler program on the new RB, where no Language Environment recovery has been established, issues an SVC ABEND. When the SVC ABEND is issued from the second RB, Language Environment, which is only active on the first RB, will percolate the abend to the system.

  As a result, Language Environment member languages will not be called for termination processing and any open files may be closed by MVS task termination. If there are DCB exits associated with any of the open files, these exits may be called from task termination, and may result in some unexpected S0Cx abends since the member language did not initiate the close of the files.

  To avoid these scenarios, do one of the following:

  – Make the assembler program Language Environment conforming by using CEEENTRY and CEETERM macros.
  – Do not use SVC LINK to issue abends from assembler programs. Use the Language Environment callable service CEE3ABD

– Make sure that all files are closed in the application before linking to an assembler routine to issue an abend.

Using CEE3SPM and XUFLOW to enable and disable hardware conditions

You can change the enablement of certain hardware interrupts using the CEE3SPM callable service and XUFLOW runtime option under Language Environment (see *z/OS Language Environment Programming Reference* for syntax).

Language Environment provides the CEE3SPM callable service to replace assembler language routines that manipulate bits 20 through 23 of the Program Status Word (PSW) to enable or disable the following hardware interrupts:

- Decimal overflow
- Exponent underflow
- Fixed-point overflow
- Significance

The XUFLOW runtime option specifies whether an exponent underflow exception causes a program interrupt. Both CEE3SPM and XUFLOW can change the condition handling semantics of the HLL or HLLs of your application. Therefore, use CEE3SPM and XUFLOW only if you understand the effect they have on your application.

C and C++ considerations: C and C++ ignore requests to enable the decimal overflow, exponent underflow, fixed-point overflow, or significance exceptions.

COBOL considerations: The decimal overflow and fixed-point overflow exceptions *cannot* be enabled in a COBOL program; COBOL ignores any request to enable these exceptions.

Fortran considerations: The fixed-point overflow, decimal overflow, and exponent underflow masks are ON by default. Mask settings remain in effect until changed by CEE3SPM or XUFLOW, or until the application calls a new load module containing code from a language that specifies the masks ON.

The Fortran XUFLOW callable service can affect the semantics of any ILC application or any program setting made with CEE3SPM.

PL/I considerations: PL/I semantics depend on the program mask being given certain settings:

- The fixed-point overflow, decimal overflow, and exponent underflow masks are ON. For Enterprise PL/I for z/OS, the fixed-point overflow mask is OFF.
- The significance mask is OFF.

Condition step

The condition step begins after the enablement step has completed and Language Environment determines that an exception in your application should be handled as a condition. In the simplest form of this step, Language Environment traverses the stack beginning with the stack frame for the routine in which the condition occurred and progresses towards earlier stack frames. Condition handlers are invoked at each intervening stack frame and given a chance to respond in any of the ways described in "Responses to conditions" on page 206. The condition step lasts until a condition handler requests a resume or until default condition handling occurs (condition went unhandled). Throughout the following discussion,

refer to Figure 56.

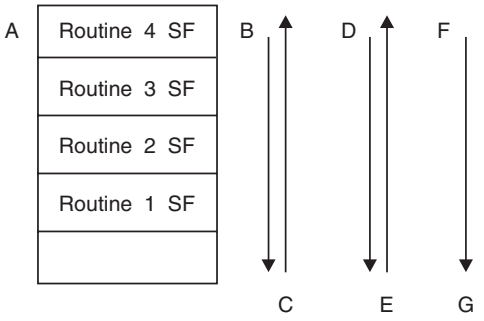

Figure 56. Condition processing

1. Language Environment condition handling begins at the most recently activated stack frame. This is the stack frame associated with the routine that incurred the condition. In Figure 56, this is **A**, or routine 4.
2. If the debug tool is present, and the setting of the TEST runtime option indicates that it should be given control, it is invoked. See *z/OS Language Environment Programming Reference* for information about the TEST runtime option.
3. If the debug tool is not invoked, or does not handle the condition, Language Environment traverses the stack, stack frame by stack frame, towards earlier stack frames. This is in the direction of arrow **B** in Figure 56. User-written condition handlers established using CEEHDLR, and then language-specific condition handlers present at each stack frame such as C/C++ signal handlers or PL/I ON-units, can all respond by percolating, promoting, or handling the condition (see "Responses to conditions" on page 206 for a discussion of these actions).
4. Condition handling is complete if one of the handlers requests the application to resume execution. If all stack frames have been visited, and no condition handler has requested a resume, the language of the routine in which the exception occurred can enforce default condition handling semantics.
5. If the HLL of the routine that originated the condition does not issue a resume, what occurs next depends on whether there is a PL/I routine active on the stack.
   a. The condition is percolated if there is no currently active PL/I routine or if the condition is not one that PL/I promotes to the ERROR condition (see "Promoting conditions to the PL/I ERROR condition" on page 227 for details). Language Environment default actions are then taken based on the severity of the unhandled condition, as indicated in Table 34 on page 201.

      If the condition is of severity 2 or above, Language Environment promotes the condition to T_I_U (termination imminent due to an unhandled condition) and returns to routine 4 to redrive the stack (this occurs at points **C** and **D** in Figure 56). For more information about the termination imminent step and T_I_U, see "Termination imminent step" on page 202.
   b. If the condition is one that PL/I promotes to the PL/I ERROR condition (see "Promoting conditions to the PL/I ERROR condition" on page 227 for details), the condition is promoted at the location represented as **C** in Figure 56, and another pass is made of the stack. The following takes place:

- On the next pass of the stack (**D**), any ERROR ON-unit or user-written condition handler is invoked. If the ON-unit or user-written condition handler issues a resume, condition handling ends. Execution resumes where the resume cursor points.
- If no ON-unit or user-written condition handler issues a resume, the ERROR condition is promoted (at **E**) to T_I_U. (See "Processing the T_I_U condition" on page 202 for a discussion of T_I_U.)
- A final pass of the stack is made, beginning in Routine 4 where the original condition occurred (**F**). Because T_I_U maps to the PL/I FINISH condition, both established PL/I FINISH ON-units and user-written condition handlers registered for T_I_U are invoked.
- If no user-written or HLL condition handlers act on the condition, Language Environment begins thread termination activities in response to the unhandled condition (**G**). See Table 34 for the default actions that Language Environment takes for conditions of different severities.

Influencing condition handling with the ERRCOUNT runtime option

The ERRCOUNT option allows you to specify the number of errors that are tolerated during the execution of a thread. Each condition of severity 2 or above, regardless of its origin, increments the error count by one. POSIX conditions are not counted. If the error count exceeds the limit, Language Environment terminates the enclave with abend code 4091 and reason code 11.

See *z/OS Language Environment Programming Reference* for syntax and more information about using ERRCOUNT.

Table 34. Default responses to unhandled conditions. The default responses to unhandled conditions fall into one of two types, depending on whether the condition was signaled using CEESGL and an fc parameter, or the condition came from any other source.

Severity of condition	Condition signaled by user in a call to CEESGL with an fc	Condition came from any other source
0 (Informative message)	Return CEE069 condition token, and resume processing at the next sequential instruction. See the fc table for CEESGL (*z/OS Language Environment Programming Reference*) for a description of the CEE069 condition token.	Resume without issuing message.
1 (Warning Message)	Return CEE069 condition token, and resume processing at the next sequential instruction.	If the condition occurred in a stack frame associated with a COBOL program, resume and issue the message. If the condition occurred in a stack frame associated with a non-COBOL routine, resume without issuing message.
2 (Program terminated in error)	Return CEE069 condition token, and resume processing at the next sequential instruction.	Promote condition to T_I_U, redrive the stack, then terminate the thread if the condition remains unhandled. Message issued if TERMTHDACT(MSG) is specified. See "Processing the T_I_U condition" on page 202 for more information about T_I_U.

Table 34. Default responses to unhandled conditions (continued). The default responses to unhandled conditions fall into one of two types, depending on whether the condition was signaled using CEESGL and an fc parameter, or the condition came from any other source.

Severity of condition	Condition signaled by user in a call to CEESGL with an fc	Condition came from any other source
3 (Program terminated in severe error)	Return CEE069 condition token, and resume processing at the next sequential instruction.	Promote condition to T_I_U, redrive the stack, then terminate the thread if the condition remains unhandled. Message issued if TERMTHDACT(MSG) is specified.
4 (Program terminated in critical error)	Promote condition to T_I_U, redrive the stack, then terminate the thread if the condition remains unhandled. Message issued if TERMTHDACT(MSG) is specified.	Promote condition to T_I_U, redrive the stack, then terminate the thread if the condition remains unhandled. Message issued if TERMTHDACT(MSG) is specified.

Termination imminent step

The termination imminent step occurs for certain unhandled conditions or as the result of STOP-like language constructs such as C/C++ `exit()` or `abort()`; Fortran STOP statement or a call to EXIT, SYSRCX, or DUMP; or PL/I STOP. The termination imminent step occurs when one of the following events occurs:

- The T_I_U condition (Termination Imminent due to Unhandled condition) is raised
- The T_I_S condition (Termination Imminent due to Stop) is raised to indicate that the thread can potentially terminate

When T_I_U or T_I_S is raised, another pass is made of the stack. See “Processing the T_I_U condition” and “Processing the T_I_S condition” on page 203 for details on what can happen during and after the pass.

You can directly signal T_I_U and T_I_S using the CEESGL callable service. When you do, Language Environment behaves as described in “CEESGL and the termination imminent step” on page 204.

Processing the T_I_U condition

Table 34 on page 201 indicates that for severity 4 conditions signaled by CEESGL, and for severity 2 and above conditions that remain unhandled after all condition handlers have had a chance to handle them, Language Environment promotes the unhandled condition to T_I_U. See *z/OS Language Environment Programming Reference* for a discussion of CEESGL. T_I_U is a severity 3 condition with the representation shown in Table 35:

Table 35. T_I_U condition representation

Symbolic feedback code (fc)	Severity	Message number	Message text
CEE066	3	0198	Termination of a thread was signaled.

After promoting the condition to T_I_U, Language Environment does the following:

1. Language Environment revisits each stack frame on the stack, beginning with the stack frame in which the condition occurred, and progressing towards

earlier stack frames. At each stack frame, HLL and user-written condition handlers are given a chance to handle the condition.

The T_I_U condition maps to the PL/I FINISH condition. Therefore, an established PL/I FINISH ON-unit or registered user-written condition handler can be invoked to handle the condition. After the ON-unit or condition handler completes its processing, the termination activities described in Step 3 take place.

2. If, during the course of condition handling, the resume cursor is moved and a resume is requested by a condition handler, execution resumes at the instruction pointed to by the resume cursor. If a resume is requested for the T_I_U condition without moving the resume cursor, the thread terminates immediately with no clean-up. See *z/OS Language Environment Programming Reference* for a discussion of the CEEMRCR service.
3. If all stack frames have been visited, and the condition remains unhandled, or a FINISH ON-unit or user-written condition handler has processed the condition and returned, Language Environment performs the following termination activities:
   - Sets the reason and return codes. The return code value is based on the severity of the original unhandled condition, not on the T_I_U condition (which is a severity 3).
   - Issues a message for the condition.
   - Prints a traceback and dump depending on the setting of the TERMTHDACT runtime option (see *z/OS Language Environment Programming Reference* for syntax)
   - Terminates the thread.

   In this release of Language Environment, multithreading is supported only in a POSIX(ON) environment. Unless your application is doing multithreading, therefore, when a thread terminates, the entire enclave terminates.

Processing the T_I_S condition

The termination imminent step of condition handling can also be entered as the result of the T_I_S (Termination_Imminent due to STOP) condition being signaled. T_I_S is a severity 1 condition with the following representation:

Table 36. T_I_S condition representation

Symbolic feedback code (fc)	Severity	Message number	Message text
CEE067	1	0199	Termination of a thread was signaled.

The T_I_S condition is raised by Language Environment immediately upon detection of a language STOP-like construct such as:

- C/C++ `exit()` function
- COBOL STOP RUN
- Fortran STOP statement
- Fortran END statement in a main program
- PL/I EXIT statement
- PL/I STOP statement

The HLL constructs listed above initiate termination activities for the enclave in two steps:

1. Language Environment traverses the stack beginning at the stack frame for the routine containing the STOP-like statement and proceeds, stack frame by stack frame, towards earlier stack frames. User-written and HLL condition handlers at each stack frame are given a chance to handle the condition.

   T_I_S maps to the PL/I FINISH condition. Therefore, both established PL/I FINISH ON-units and user-written condition handlers can be invoked. After the ON-unit or condition handler completes its processing, the termination activities described in Step 2 take place.
2. If all stack frames have been visited, and the condition remains unhandled, or an ON-unit or condition handler has processed the condition and returned, Language Environment:
   - Sets the reason and return codes
   - Terminates the thread

   Language Environment performs only one pass of the stack for STOP-like statements.

Termination imminent step and the TERMTHDACT runtime option

You can use the TERMTHDACT runtime option to set the type of information you receive after your application terminates in response to a severity 2, 3, or 4 condition. For example, you can specify that a message or dump is to be generated if the application terminates.

TERMTHDACT behavior under z/OS UNIX differs slightly; for details, see "Termination imminent step under z/OS UNIX" on page 233.

PL/I considerations: For those PL/I conditions that do not raise the ERROR condition as part of their implicit action, PL/I requires that a message be issued. For these conditions, the message is issued regardless of the setting of TERMTHDACT. Therefore, messages can be delivered even when TERMTHDACT(QUIET) is set.

If the condition remains unhandled (for example, the PL/I FINISH condition is still regarded as unhandled after normal return from a FINISH ON-unit), and the application terminates, the message associated with the condition is not issued again at termination.

For more information about TERMTHDACT, see *z/OS Language Environment Debugging Guide* and *z/OS Language Environment Programming Reference*.

CEESGL and the termination imminent step

You can signal T_I_U and T_I_S directly with the CEESGL callable service. Two reasons you might need to do this are:

- To force the driving of a FINISH ON-unit or similar construct that would perform clean-up activities
- To test a PL/I ON-unit or user-written condition handler that you have designed to handle T_I_U or T_I_S

If you signal T_I_U or T_I_S by calling CEESGL with the feedback code parameter, the following occurs:

1. Language Environment visits each stack frame on the stack, beginning with the stack frame in which the condition was signaled, and progressing towards older stack frames. At each stack frame, HLL and user-written condition handlers are given a chance to handle the condition.

T_I_U and T_I_S both map to the PL/I FINISH condition. Therefore, an established PL/I FINISH ON-unit can be invoked to handle the condition.

2. If all stack frames have been visited, and the condition remains unhandled, or a FINISH ON-unit has processed the condition and returned, Language Environment returns the CEE069 condition token to the routine that called CEESGL, and processing resumes at the next sequential instruction.

Invoking condition handlers

After a condition has been enabled, Language Environment steps through the stack and passes control to the most recently established condition handling routines in the stack. Condition handling routines can be in the form of the Debug Tool, a user-written condition handler, or a language-specific condition handling mechanism:

Debug tool

If you have invoked a debug tool using the TEST runtime option or the CEETEST callable service (see *z/OS Language Environment Programming Reference*), the debug tool gains control when a condition occurs. Unless a condition is promoted and is passed through the stack again for additional condition handling, a debug tool is invoked only once per stack.

User-written condition handler

User-written condition handlers are routines that you supply to handle specific conditions that might arise in the runtime environment. As shown in Figure 57, a LIFO queue containing zero or more user-written condition handlers is associated with each stack frame. A different queue exists for each stack frame. For example, if routine A calls routine B, there is a new queue associated with the stack frame for routine B.

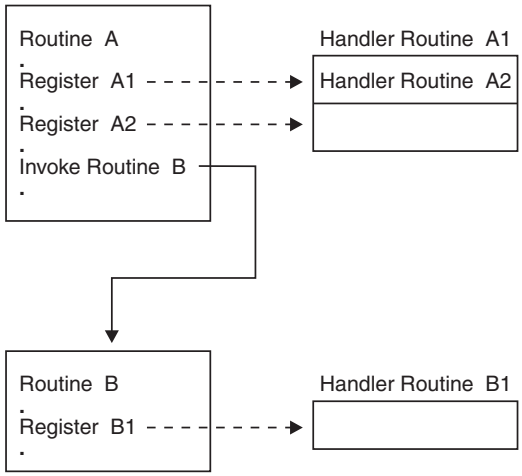

Figure 57. Queues of user-written condition handlers

User-written condition handlers are registered on a stack frame-by-stack frame basis using the CEEHDLR callable service. A call to CEEHDLR from a given routine adds a user-written condition handler onto the queue for the stack frame associated with that routine. Registering a condition handling routine using CEEHDLR implicitly requests Language Environment to pass control to this routine when a condition occurs. For example, you could call CEEHDLR to register two user-written condition

handlers for the same stack frame, one that handles floating-point underflow conditions and another that handles floating-point divide conditions.

The most recent user condition handler registered using CEEHDLR is the first to be invoked by Language Environment. Note that you could also register a single user condition handler to handle both of these conditions.

The user-written condition handlers can respond to a condition in any of the ways described in "Responses to conditions."

User-written condition handlers are given a chance to handle a given condition before the language-specific condition handling semantics described in "Language-specific condition handling semantics" take effect.

Language-specific condition handling semantics
If language-specific semantics are established within a stack frame, they are honored. Of course, the language-specific handling mechanisms act only on those conditions for which the language has a defined action. The language *percolates* all other conditions by passing them on to the next condition handler.

If a condition is unhandled after the stack is traversed, default language-specific and Language Environment condition semantics take over.

Responses to conditions

Condition handlers are routines written to respond to conditions in one of the following ways:

Resume
A resume occurs when a condition handler determines that the condition was handled and normal application execution should resume. A program resumes running usually at the instruction immediately following the point where the condition occurred.

A resume cursor points to the place where a routine should resume. The resume cursor can be manipulated to be placed at a specific point by using the CEEMRCR (move resume cursor) callable service (see *z/OS Language Environment Programming Reference*).

Percolate
A condition is percolated if a condition handler declines to handle it. User-written condition handlers, for example, can be written to act on a particular condition, but percolate all other conditions. Language Environment can continue condition handling in one of the following places:

- With the next condition handler associated with the current stack frame. This can be either the first condition handler in a queue of user-established condition handlers, or the language-specific condition semantics.
- With the most recently established condition handler associated with the calling stack frame.

Promote
A condition is promoted when a condition handler converts the condition into one with a different meaning. A condition handler can promote a condition for a variety of reasons, including the condition handler's

knowledge or lack of knowledge about the cause of the original condition. A condition can be promoted to simulate conditions that would normally come from a different source.

Fix-up and resume
The qualifying data is modified and a resume occurs with a corrective action. There are several possible responses that can be applied:

resume with new input value
A new input value is specified and the failing operation is tried again. The condition token for this action has the condition name CEE0CE.

resume with new output value
The program continues using a specified result in the place of what the failing operation would have provided. The condition token for this action has the condition name CEE0CF.

For more information about how these responses can be used in developing user-written condition handlers, see "User-written condition handler interface" on page 236.

Condition handling scenarios

The following condition handling scenarios can help you better understand what occurs during the condition handling steps. The scenarios differ in complexity, with Scenario 1 being the easiest to understand.

See Chapter 16, "Language Environment and HLL condition handling interactions," on page 211 if you are interested in specific HLL condition handling behavior.

Scenario 1: Simple condition handling

Refer to Figure 58 throughout the following discussion.

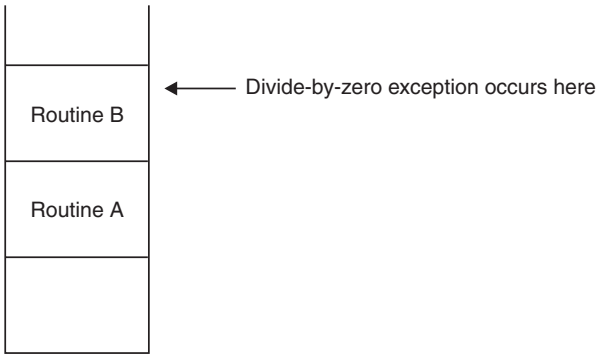

Figure 58. Scenario 1: Division by zero with no user condition handlers present

In this scenario, no C/C++ handlers created by a call to `signal()`, PL/I ON-units, or user-written condition handlers registered using the CEEHDLR service are established at any stack frame in the application.

1. A divide-by-zero exception occurs in routine B.

2. The divide-by-zero exception is enabled by the language of the stack frame in which it occurred because it is a problem that, if it remains unhandled, causes termination.
3. The following occurs in the condition step:
   - If any user-written condition handlers have been registered using the CEEHDLR callable service on the routine B's stack frame, they are given control. No handlers have been registered, so the condition is percolated.
   - If a C/C++ signal handler is registered, or if a PL/I ON-unit is established on the stack frame, it is given control. Neither one exists on routine B's stack frame, so the condition is percolated.
   - If any user-written condition handlers have been registered using CEEHDLR on routine A's stack frame, they are given control. No handlers have been registered, so the condition is percolated.
   - If a C/C++ signal handler is registered or if a PL/I ON-unit is established on routine A's stack frame, it is given control. No C/C++ signal handler or PL/I ON-unit has been established for the stack frame, so the condition is percolated.
   - After the oldest stack frame (in this case, that for routine A) has been checked, HLL and Language Environment default actions occur. Assume that the HLL percolates the condition to Language Environment.

     Language Environment examines the severity of the unhandled divide-by-zero condition (severity 3), promotes the condition to T_I_U, and requests that the stack be redriven. This is the end of the condition step and the beginning of the termination imminent step.
4. The following occurs during the termination imminent step:
   - The stack frame for routine B is revisited, and if a user-written condition handler is present, it is given control. No handlers are registered, so T_I_U is percolated.
   - If a C/C++ signal handler or PL/I ON-unit can respond to the T_I_U condition, it is given control. In this case, there are none, so the condition is percolated.
   - The stack frame for routine A is revisited, and checked for user-written condition handlers registered for the T_I_U condition, C/C++ signal handlers or PL/I ON-units. No handlers are registered, so T_I_U is percolated.
   - Language Environment takes the default action for the unhandled T_I_U condition, which terminates the enclave.

Scenario 2: User-written condition handler present for T_I_U

Scenario 2 is much the same as Scenario 1, except that routine A does have a user-written condition handler established. Refer to Figure 59 on page 209 throughout the following scenario.

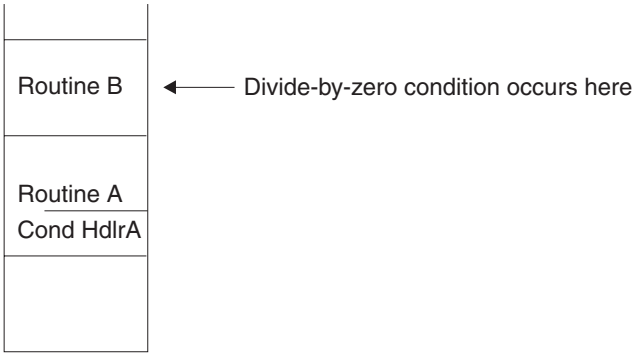

Figure 59. Scenario 2: Division by zero with a user-written condition handler present in routine A

In this scenario, routine A is a routine that invokes other prewritten applications. If any of the components of the prewritten application fail, routine A must remain up and take alternate action. Therefore, routine A has a user-written condition handler registered. The handler is designed to handle the T_I_U condition by issuing a nonlocal jump to a location within routine A. The handler percolates all conditions other than T_I_U.

1. A divide-by-zero exception occurs in routine B.
2. The divide-by-zero exception is enabled by the language of the stack frame in which it occurred because it is a problem that, if it remains unhandled, causes termination.
3. The following occurs in the condition step:
   - If a user-written condition handler has been registered for the divide-by-zero condition on routine B's stack frame, it is given control. One has not been registered, so the condition is percolated.
   - If a C/C++ signal handler has been registered or a PL/I ON-unit has been established for the divide-by-zero condition, it is given control. No C/C++ signal handler or ON-unit is present, so the condition is percolated to Language Environment.
   - If a user-written condition handler has been registered on routine A's stack frame, it is given control. However, because the divide-by-zero condition is not the one the handler is looking for, the condition is percolated.
   - If a C/C++ signal handler is registered or a PL/I ON-unit is established for the condition on routine A's stack frame, it is given control. Neither one is present, so the condition is percolated.
   - After the earliest stack frame (in this case, that for routine A) has been checked, HLL and Language Environment default actions occur. In this case, assume that the HLL percolates the condition to Language Environment.

     Language Environment examines the severity of the unhandled divide-by-zero condition (severity 3), promotes the condition to T_I_U, and requests that the stack be redriven. This is the end of the condition step and the beginning of the termination imminent step.
4. The following occurs during the termination imminent step:
   - Language Environment revisits the stack frame for routine B, checking for user-written condition handlers registered for the T_I_U condition. No handlers are registered, so T_I_U is percolated.
   - If a PL/I FINISH ON-unit is present, it is given control. In this example, there isn't one, so the condition is percolated.

- Language Environment revisits the stack frames for routine A, checking for user-written condition handlers registered for the T_I_U condition. There is one, it is given control. The user code in the handler, using either HLL or Language Environment facilities, causes control to pass to a location within routine A.

5. Control resumes with routine A at the location specified. The condition is now handled.

Scenario 3: Condition handler present for divide-by-zero

Scenario 3 is much the same as scenario 2, except that routine B has a user-written condition handler established to handle the divide-by-zero condition. Refer to Figure 60 throughout the following scenario.

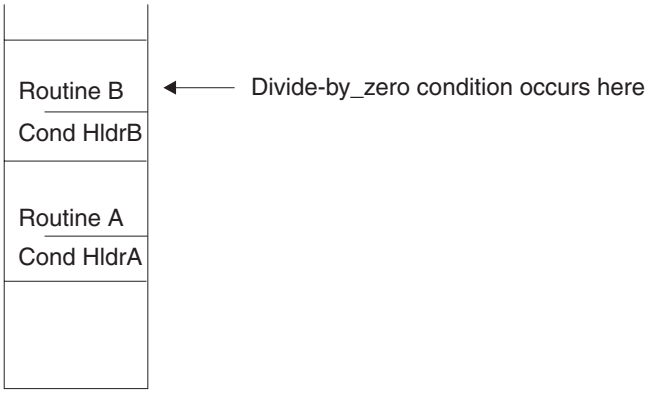

Figure 60. Scenario 3: Division by zero with a user handler present in routine B

The handler established by routine B is designed to deal with divide-by-zero and possibly other conditions that occur either during its execution or in the routines that it calls. For a divide-by-zero condition, the handler is to print a message and continue processing.

1. A divide-by-zero exception occurs in routine B.
2. The divide-by-zero exception is enabled by the language of the stack frame in which it occurred because it is a problem that, if it remains unhandled, causes termination.
3. The following occurs in the condition step:
   - If a user-written condition handler has been registered using the CEEHDLR callable service on routine B's stack frame, it is given control. The handler recognizes the divide-by-zero as a condition it is capable of dealing with. It produces a message, does appropriate clean-up, and then causes resumption either through HLL constructs or Language Environment services.
4. The condition is now considered to be handled and is never seen by stack frame A or the Language Environment default handler.

Chapter 16. Language Environment and HLL condition handling interactions

This section discusses the condition handling discussion. It would be helpful for you to read Chapter 15, "Introduction to Language Environment condition handling," on page 193 before reading this topic. Chapter 15, "Introduction to Language Environment condition handling," on page 193 introduces you to terminology and concepts that are discussed in the present topic, and offers a brief overview of pre-Language Environment HLL condition handling. It discusses in detail the Language Environment condition handling model and the many services that you can use to tailor how conditions are handled in your application. In addition, it introduces the three steps of condition handling in Language Environment.

This topic discusses HLL condition handling semantics, focusing on how HLL semantics interact with the Language Environment condition handling model and services. C, C++, COBOL, Fortran, and PL/I are each discussed, and condition handling scenarios and examples are provided. This topic also outlines the interactions between POSIX signal handling and Language Environment condition handling. See one of the following sections for details:

- "C condition handling semantics"
- "C++ condition handling semantics" on page 219
- "COBOL condition handling semantics" on page 219
- "Fortran Condition handling semantics" on page 224
- "PL/I condition handling semantics" on page 226
- "Language Environment and POSIX signal handling interactions" on page 230

If you are running a single-language application written in C or PL/I, which have extensive built-in error handling functions, and you are relying entirely upon the semantics of these languages to handle errors, you will not notice much difference in how errors are handled under Language Environment.

However, if you are running a single-language application written in COBOL or assembler that has little built-in error handling, you might notice a change in how errors are handled under Language Environment. For example, in an application that relies on abend codes to handle errors, you might need to alter the assembler user exit to get the same behavior under Language Environment as under the previous runtime environment. See Chapter 28, "Using runtime user exits," on page 421 for information about modifying the assembler user exit.

For information about condition handling in ILC applications, see *z/OS Language Environment Writing Interlanguage Communication Applications*.

C condition handling semantics

This section describes C condition handling in a POSIX(OFF) environment. If you run applications that contain POSIX functions, you should also read "Language Environment and POSIX signal handling interactions" on page 230, which discusses the interaction between POSIX signal handling and Language Environment condition handling.

© Copyright IBM Corp. 1991, 2015

C employs a global condition handling model, which, on initialization, defines the actions that are taken when a condition is raised. The actions defined by C apply to an entire enclave, not just to a routine or block within an enclave. You can alter a specific action that the C condition handler takes when a condition is raised, however, by coding `signal()` function calls in your applications.

C recognizes a number of errors; some correspond directly to the errors detected by the hardware or the operating system, and some are unique to C. All actions for condition handling are controlled by the contents of the C global error table. Table 37 contains default C-language error handling semantics.

Table 37. C conditions and default system actions

C Condition	Origin	Default action
SIGILL	Execute exception Operation exception Privileged operation `raise(SIGILL)`	Abnormal termination (return code=3000)
SIGSEGV	Addressing exception Protection exception Specification exception `raise(SIGSEGV)`	Abnormal termination (return code=3000)
SIGFPE	Data exception Decimal divide Exponent overflow Fixed-point divide Floating-point divide `raise(SIGFPE)`	Abnormal termination (return code=3000)
SIGABRT	`abort()` function `raise(SIGABRT)`	Abnormal termination (return code=2000)
SIGABND	Abend the function	Abnormal termination (return code=3000)
SIGTERM	Termination request `raise(SIGTERM)`	Abnormal termination (return code = 3000)
SIGINT	Attention condition	Abnormal termination (return code = 3000)
SIGIOERR	I/O errors	Ignore the condition
SIGUSR1	User-defined condition	Abnormal termination (return code=3000)
SIGUSR2	User-defined condition	Abnormal termination (return code=3000)
Masked	Exponent overflow Fixed-point underflow Significance	These exceptions are disabled. They are ignored during the condition handling process, even if you try to enable them using the CEE3SPM callable service.

Comparison of C-Language Environment terminology

The term *signal* is defined differently under C than under Language Environment, and you need to know the distinction to understand how C and Language Environment condition handling interact. Here is a comparison of the terminology Language Environment and C use to describe the same general idea:

- Using Language Environment services, you *register* a condition handler by using CEEHDLR, and you *raise* a condition by using CEESGL.
- Using C functions, you *register* a signal handler by using the `signal()` function, and you *raise* a signal using the `raise()` function.

You can think of *signal* as the C term for a Language Environment *condition*. To simplify the following discussion, the term *condition* is used in place of *signal*.

C signal handling functions are recognized in C++ applications. You can write a condition handling routine in C++ using C `signal()` and `raise()` functions. C++-unique exception handling functions are discussed in "C++ condition handling semantics" on page 219.

Controlling condition handling in C

In C, conditions can come from two main sources:

- An exception might occur because of an error in the code. The exception might or might not be seen as a condition, depending on how you use the `signal()` function.
- You can explicitly report a condition by using the `raise()` function.

Using the signal() function

The C `signal()` function call alters the actions that the global error table specifies will be taken for a given condition. You can use `signal()` to do the following:

- Ignore the condition completely. You do this by specifying `signal(sig_num,SIG_IGN)`, where `sig_num` represents the condition to be ignored. When the action for the condition is to ignore it, the condition is considered to be *disabled*. The condition will therefore not be seen.

  Note: Exceptions to this rule are the SIGABND condition and the system or user abend represented by Language Environment message number 3250. These are never ignored, even if you specify SIG_IGN in a call to `signal()`.
- Reset condition handling to the defaults shown in Table 37 on page 212. Actions for handling a condition are implicitly reset to the system default when the condition is reported, but at times you need to explicitly reset condition handling. Specify `signal(sig_num, SIG_DFL)`, where `sig_num` is the condition to be reset.
- Call a signal handler to handle the condition. Specify `signal(sig_num, sig_handler)`, where `sig_num` represents the condition to be handled, and `sig_handler` represents a pointer to the user-written function that is called when the condition occurs.

  The signal handler specified in `signal()` is given a chance to handle a condition only after any user-written handler established using CEEHDLR is invoked.

Using the raise() function

When the C `raise()` function is called for any of the conditions listed in Table 37 on page 212, a corresponding Language Environment condition is automatically raised by a call to the CEESGL callable service. Any of these conditions (EDC6000 through EDC6004) can be handled by a user-written condition handler registered using the CEEHDLR service. For detailed descriptions of conditions EDC6000 through EDC6004, see *z/OS XL C/C++ Programming Guide* and *z/OS Language Environment Runtime Messages*.

For more information about the CEEHDLR and CEESGL callable services, see *z/OS Language Environment Programming Reference*. For more information about using the `raise()` function, see *z/OS XL C/C++ Runtime Library Reference*.

C atexit() considerations

In all C applications, the `atexit` list is honored only after all condition handling activity has taken place and all user code is removed from the stack, which invalidates any jump buffer previously established.

With C, you can register a number of routines that gain control during the termination of an enclave. When using the C `atexit()` function, consider the following:

- A C `atexit` routine can nominate only C routines, but those routines can call routines written in other languages.
- User-written condition handlers can be registered while running an `atexit` routine. However, any jump buffers established are invalid.
- If a severity 2 or greater condition arises while running an `atexit` routine and it is unhandled, further `atexit` routines are skipped and the Language Environment environment is terminated.
- A C `exit()` function or PL/I STOP or EXIT statement issued within an `atexit` routine halts all other `atexit` functions.
- If, while running an `atexit` routine, an attempt to register another `atexit` routine is made, the registration is ignored. The `atexit` routine returns a nonzero result indicating a failure to register the routine.

C++ supports `atexit()`, but any function pointer input to `atexit()` must be declared as having `extern "C"` linkage.

C condition handling actions

In this section, the condition handling semantics of C-only applications are described as they relate to the Language Environment condition handling model. Condition handling for applications with both C and non-C routines is discussed in *z/OS Language Environment Writing Interlanguage Communication Applications*.

If an exception occurs while a C routine is executing, the following activities are performed:

1. The Language Environment enablement step of condition handling is entered.

   If the action defined for the exception is to ignore it for one of the following reasons, the condition is disabled. Execution continues at the next sequential instruction after the point where the condition occurred.

   - You have specified `SIG_IGN` in a call to the `signal()` function for any C condition except SIGABND or the system or user abend represented by the Language Environment message number 3250.
   - The exception is one of those listed as masked in Table 37 on page 212.
   - You did not specify any action, but the default action for the condition is `SIG_IGN` (see Table 37 on page 212).
   - You are running under CICS and a CICS handler is pending.
2. If SIG_IGN is not specified or defaulted for the exception, and the exception is not masked, the Language Environment condition step of condition handling is entered. These activities then occur:
   - If the debug tool is present, and the setting of the TEST runtime option indicates that it should be given control, it is invoked. See *z/OS Language Environment Programming Reference* for information about the TEST runtime option.

- If the debug tool is not invoked, or does not handle the condition, any user-written condition handlers registered using CEEHDLR for that stack frame are invoked.
- If no user-written condition handlers are registered for the condition that has occurred, and if you have registered a signal handler for the condition, that handler is invoked.
- If the signal handler handles the condition, control returns to the routine in which the condition occurred. If the signal handler cannot handle the condition, it might force termination by issuing `exit()` or `abort()`, or might issue a `longjmp()`.

  Condition handling can only continue after a signal handler gains control if you specify `SIG_DFL` in a call to `signal()`. If you do, the condition is percolated to the next user-written condition handler registered using CEEHDLR, or to the language-specific condition handler associated with the next stack frame.
- If condition handlers at every stack frame have had a chance to respond to the condition and it still remains unhandled, the Language Environment default actions described in Table 34 on page 201 take place.
- If the Language Environment default action is to promote the condition to T_I_U (Termination Imminent due to an Unhandled condition), the termination imminent step of condition handling is entered.

3. When the condition is promoted to T_I_U, Language Environment makes another pass of the stack looking for user-written condition handlers registered for T_I_U.

   If, on the next pass of the stack, no condition handler issued a resume or moved the resume cursor, Language Environment terminates the enclave.

C condition handling examples

The following sections describe various scenarios of condition handling.

Condition occurs with no signal handler present: The following three figures illustrate how a condition such as a divide-by-zero is handled in a C routine in Language Environment if you do not use any Language Environment callable services, or don't have any user-written condition handlers registered.

There is no user-written condition handler or signal handler registered for C370C or any of the other C routines, so the condition is percolated through all of the stack frames on the stack. At this point, C default actions take place of percolating the condition to Language Environment. Language Environment takes its default action for an unhandled severity 3 condition and terminates the application. A message, trace, Language Environment dump, or a user address space dump could be generated depending on the setting of TERMTHDACT (see *z/OS Language Environment Programming Reference*).

Figure 61 on page 216 is a C main routine that calls C370B, a subroutine that passes data to another subroutine, C370C.

```
/*Module/File Name:  EDCMLTA  */
/*********************************************************************/
/* Demonstrate a failing C/370 program                               */
/* with multiple active routines                                     */
/* on the stack.  The call sequence is as follows:                   */
/*  C370A ---> C370B ---> C370C (which does a divide-by-zero)        */
/*********************************************************************/

#include <stdio.h>

int y = 0;
void C370B(void);

int main(void) {

  printf("In Program C370A\n");
  C370B();
}
```

Figure 61. C370A routine

Figure 62 is a C subroutine that calls C370C, and passes data to it.

```
/*Module/File Name:  EDCMLTB  */
/*********************************************************************/
/* This routine is called to pass data forward to C370C.             */
/* C370C will then cause a zero divide.                              */
/*********************************************************************/

#include <stdio.h>

extern int y;
void C370C(int);

void C370B(void) {

  int x;
  printf("In Program C370B\n");
  x = y;
  C370C(x);
}
```

Figure 62. C370B routine

Figure 63 on page 217 generates a divide-by-zero. The divide-by-zero condition is percolated back to C370B, to C370A, and to Language Environment default behavior.

```
/*Module/File Name:  EDCMLTC  */
/*********************************************************************/
/* This routine is called by C370B to generate a zero divide.        */
/*********************************************************************/

#include <stdio.h>


void C370C(int y) {

  printf("In Program C370C\n");
  y = 1/y;
}
```

Figure 63. C370C routine

Condition occurs with signal handler present: Figure 64 contains a simple example of a C application in which `y = a/b` is a mathematical operation. `signal (SIGFPE, c_handler)` is a signal invocation that registers the routine `c_handler()` and gives it control if a floating-point divide exception occurs.

```
/*Module/File Name:  EDCCSIG  */
/*********************************************************************/
/* A routine with a C/370 condition handler registered.              */
/*********************************************************************/

#include <stdio.h>
#include <signal.h>

#ifdef __cplusplus
extern "C" {
#endif
   void c_handler(int);
#ifdef __cplusplus
}
#endif
int main(void) {
  int a=8, b=0, y;
  /* .
     .
     . */
  signal (SIGFPE, c_handler);
  /* .
     .
     . */
  y = a/b;
  /* .
     . */
}

void c_handler(int i)
{
   printf("handled SIGFPE\n");
  /* .
     . */
   return;
}
```

Figure 64. C condition handling example

If b = 0, a floating-point divide condition occurs. Language Environment condition handling begins:

- The enablement step occurs.
  - If Table 37 on page 212 indicates that floating-point divide is a masked exception, the exception is ignored. The floating-point divide is not a masked exception, however.
  - If `SIG_IGN` is specified for the `SIGFPE` exception in any of the three examples, then the `SIGFPE` exception is ignored. However, this does not occur.

  The floating-point divide condition is enabled and enters the condition step of condition handling.
- If a debug tool is present, it receives control.
- If a user-written condition handler is registered by CEEHDLR for that stack frame, it receives control.

If none of the above takes place, the condition manager gives the C signal-handler control. This handler in turn invokes `c_handler()` as specified in the `signal()` function in Figure 64 on page 217. Control is then returned to the instruction following the one that caused the condition.

C signal representation of S/370 exceptions

S/370 exceptions and abends are mapped to C signals. Therefore, if both of the following condition are true, you can apply C signal handling functions to S/370 exceptions and abends:

- You have set the TRAP(ON,SPIE) or the TRAP(ON,NOSPIE) runtime option (Language Environment condition handling is enabled)
- You do not request in the assembler user exit or in the ABPERC runtime option that any of the abends be percolated (ABPERC(NONE))

Following are the C signal representations for the following exceptions.

- For S/370 exceptions generated by the hardware or math library, see Table 38. Some of the exceptions listed in the table can be masked off for normal Language Environment execution.
- For abends, see Table 39 on page 219.

Table 38. Mapping of S/370 exceptions to C signals

Interrupt code	Interrupt code description	C signal type
01	Operation exception	SIGILL
02	Privileged-operation exception	SIGILL
03	Execution exception	SIGILL
04	Protection exception	SIGSEGV
05	Addressing exception	SIGSEGV
06	Specification exception	SIGILL
07	Data exception	SIGFPE
08	Fixed-point overflow exception	n/a
09	Fixed-point divide exception	SIGFPE
10	Decimal-overflow exception	SIGFPE
11	Decimal-divide exception	SIGFPE
12	Exponent-overflow exception	SIGFPE
13	Exponent-underflow exception	n/a

Table 38. Mapping of S/370 exceptions to C signals (continued)

Interrupt code	Interrupt code description	C signal type
14	Significance exception	n/a
15	Floating-point divide exception	SIGFPE

Table 39 lists the C signal type for abends that can occur under Language Environment.

Table 39. Mapping of abend signals to C signals

Message	Abend Description	C Signal Type
CEE3250	User-initiated abends (SVC 13)	SIGABND
CEE3250	MVS(VSAM or others)-initiated abends	SIGABND
No message delivered	Language Environment abends for severity 4 errors (U40xx)	n/a
No message delivered	Language Environment-initiated abends	n/a

C++ condition handling semantics

C++ includes the C condition handling model and new C++ constructs `throw`, `try`, and `catch`. For more information about these C++ constructs, see *z/OS XL C/C++ Language Reference*. If you use C exception handling constructs (`signal/raise`) in your C++ routine, condition handling will proceed as described in "C condition handling semantics" on page 211. You can use C or C++ condition handling constructs in your C++ applications, but do not mix C constructs with C++ constructs in the same application because undefined behavior could result.

If you use C exception handling, a C++ routine can register a signal handler by coding `signal()` to handle exceptions raised in either a C or a C++ routine. If you use the C++ exception handling model, only C++ routines can catch a thrown object. When a thrown object is handled by a catch clause, execution will continue after the catch clause in the routine. If a thrown object goes unhandled after each stack frame has had a chance to handle it, C++ defines that the `terminate()` function is called. By default, `terminate()` calls `abort()`. You can call the C++ library function `set_terminate()` to register your own function to be called by `terminate`. When `terminate()` finishes calling the user's function, it will call `abort()`.

C routines do not support `try`, `throw`, and `catch`, nor can C routines use `signal()` to register a handler for thrown objects. A C++ routine cannot register a handler via `signal()` to catch thrown objects; it must use catch clauses. `try`, `throw`, and `catch` cannot handle hardware exceptions, nor C, COBOL, PL/I, or Language Environment exceptions.

COBOL condition handling semantics

COBOL native condition handling is very different from C, PL/I, or Fortran native condition handling.

COBOL provides some condition handling on a statement-by-statement basis; for example, the ON EXCEPTION phrase of the CALL statement, the ON EXCEPTION phrase of the INVOKE statement, and the ON SIZE ERROR phrase of the

COMPUTE statement. For other conditions, COBOL generally reports the error. An assembler user exit is available for COBOL to specify events that should cause an abend.

For more information about user exits, see Chapter 28, "Using runtime user exits," on page 421. For a discussion of COBOL condition handling in an ILC application, see *z/OS Language Environment Writing Interlanguage Communication Applications*. The following discussion applies to stacks comprised solely of COBOL programs.

If an exception occurs in a COBOL program, COBOL does nothing until every condition handler at every stack frame has been interrogated.

After all stack frames have been visited, COBOL does the following:

1. Checks to see if the condition has a facility ID of IGZ (is a COBOL-specific condition). If not, COBOL percolates the condition to the Language Environment condition manager.
2. Handles the condition based on its severity (see Table 34 on page 201 for an explanation of severity codes and their meaning under Language Environment).

   If the condition severity is 1, a message describing the condition is issued to the destination specified in the MSGFILE runtime option, and processing resumes in the program in which the error occurred.

   If the severity is 2 or above, COBOL percolates the condition to the Language Environment condition manager. The Language Environment default action then takes place.

COBOL condition handling examples

The following examples demonstrate how conditions are handled in Language Environment if you do not use any Language Environment callable services, and do not have any user-written condition handlers registered. The COBOLA program in Figure 65 on page 221 calls COBOLB in Figure 66 on page 222, which in turn calls the COBOLC program, in Figure 67 on page 223. A divide-by-zero condition occurs in COBOLC.

The divide-by-zero is enabled as a condition, so the condition step of Language Environment condition handling is entered. There is no user-written condition handler that is registered for COBOLC or any of the other COBOL programs, so the condition is percolated through all of the stack frames. COBOL's default action for the divide-by-zero condition is to percolate the condition to Language Environment. The divide-by-zero condition has a severity of 3. The Language Environment default response to an unhandled severity 3 condition is to terminate the application and issue a message if TERMTHDACT(MSG) is specified.

```
CBL LIB,QUOTE,NODYNAM
      *Module/File Name: IGZTMLTA
      ************************************************************
      *                                                          *
      * Demonstrate a failing COBOL program with multiple active  *
      * routines on the stack. The call sequence is as follows:   *
      *                                                          *
      * COBOLA --> COBOLB --> COBOLC (which causes a zero divide) *
      *                                                          *
      ************************************************************
       IDENTIFICATION DIVISION.
       PROGRAM-ID. COBOLA.
       ENVIRONMENT DIVISION.
       DATA DIVISION.
       WORKING-STORAGE SECTION.
       1   Y  PIC 999 VALUE ZERO.
      *
       PROCEDURE DIVISION.
           DISPLAY "In COBOLA.".
           CALL "COBOLB" USING Y.

           GOBACK.
```

Figure 65. COBOLA program

Figure 66 on page 222 calls COBOLC and passes data to it.

```
CBL LIB,QUOTE,NOOPTIMIZE,NODYNAM
      ************************************************
      *                                              *
      *  IBM Language Environment                    *
      *                                              *
      *  Licensed Materials - Property of IBM        *
      *                                              *
      *  5645-001 5688-198                           *
      *  (C) Copyright IBM Corp. 1991, 1997          *
      *  All Rights Reserved                         *
      *                                              *
      *  US Government Users Restricted Rights - Use, *
      *  duplication or disclosure restricted by GSA  *
      *  ADP Schedule Contract with IBM Corp.        *
      *                                              *
      ************************************************
      *Module/File Name:  IGZTMLTB
      ************************************************************
      *                                                          *
      * Second routine called in the following call sequence:    *
      *                                                          *
      * COBOLA --> COBOLB --> COBOLC (which causes a zero divide) *
      *                                                          *
      ************************************************************
       IDENTIFICATION DIVISION.
       PROGRAM-ID. COBOLB.
       ENVIRONMENT DIVISION.
       DATA DIVISION.
       WORKING-STORAGE SECTION.
       1   X  PIC 999 VALUE ZERO.
       LINKAGE SECTION.
       1   Y  PIC 999.
      *
       PROCEDURE DIVISION USING Y.
           DISPLAY "In COBOLB.".
           MOVE Y TO X.
           CALL "COBOLC" USING X.

           GOBACK.
```

Figure 66. COBOLB program

Figure 67 on page 223 generates a divide-by-zero condition. The divide-by-zero condition is percolated back to COBOLB, to COBOLA, and to Language Environment default behavior.

```
CBL LIB,QUOTE,NODYNAM
      *Module/File Name: IGZTMLTC
      ************************************************************
      *                                                          *
      * Third routine called in the following call sequence:     *
      *                                                          *
      * COBOLA --> COBOLB --> COBOLC (which causes a zero divide) *
      *                                                          *
      ************************************************************
       IDENTIFICATION DIVISION.
       PROGRAM-ID. COBOLC.
       ENVIRONMENT DIVISION.
       DATA DIVISION.
       LINKAGE SECTION.
       1   Y  PIC 999.
      *
       PROCEDURE DIVISION USING Y.
           DISPLAY "In COBOLC.".
           COMPUTE Y = 1 / Y.

           GOBACK.
```

Figure 67. COBOLC program

Resuming execution after an IGZ condition occurs

When a COBOL condition with a facility ID of IGZ occurs, you must call CEEMRCR with a 0 or 1 *type_of_move* before a resume is attempted. You cannot *resume in place* after an IGZ condition occurs because the current stack frame is that for the runtime library routine. If a user-written condition handler issued a *result_code* 10 (see "User-written condition handler interface" on page 236) without moving the resume cursor first, that would be a resume in place. A 0 *type_of_move* results in a resume at the instruction in the program following the call to the COBOL runtime library routine. For example, if you encounter an error when trying to open a file, you cannot resume in place. You must either move the resume cursor and then resume, or percolate the condition.

Resuming execution after a COBOL STOP RUN statement

There is a different constraint on resuming after a COBOL STOP RUN statement. When a STOP RUN is issued, Termination Imminent due to Stop (T_I_S) is raised (see "Processing the T_I_S condition" on page 203 for more information about T_I_S). Therefore, you can respond to a STOP RUN by registering a user-written condition handler to recognize T_I_S.

This condition handler *cannot* call CEEMRCR with a 0 *type_of_move*, which means to move the resume cursor to the point in your program just after the STOP RUN statement. This violates the standard definition of a STOP RUN being the last statement to execute in the program in which it is coded. Assuming your program is a subroutine, you could issue a 1 *type_of_move* to move the resume cursor to the call return point of the stack frame previous to the one of the program that issued the STOP RUN. You could also percolate the condition.

Reentering COBOL programs after stack frame collapse

A *stack frame collapse* occurs when the condition manager skips over one or more active routines and execution resumes in an earlier routine on the stack. This can occur due to either of the following:

- An explicit GOTO out of block issued from a C or PL/I routine
- Moving the resume cursor using the CEEMRCR callable service and requesting a resume

Language Environment resets any intervening COBOL programs from an active to inactive state, provided they are the following:

- VS COBOL II programs compiled with the CMPR2 compiler option
- VS COBOL II programs compiled with NOCMPR2 that do not use *nested programs*
- COBOL for OS/390 & VM, COBOL for MVS & VM or COBOL/370 programs compiled with the CMPR2 compiler option or
- COBOL for OS/390 & VM, COBOL for MVS & VM and COBOL/370 programs compiled with NOCMPR2 that do not use the combination of the INITIAL attribute, nested programs, and file processing in the same compilation unit
- Enterprise COBOL for z/OS programs that do not use the combination of the INITIAL attribute, nested programs, and file processing in the same compilation unit

After a stack frame collapse, the routines listed above can be reentered.

Language Environment issues a warning message during stack frame collapse for each intervening COBOL program that does not adhere to the above restrictions. In addition, after the GOTO or resume is performed, any attempt to re-enter these programs is diagnosed as an attempted recursive entry error.

Handling fixed-point and decimal overflow conditions

The ON SIZE ERROR phrase continues to be invoked by COBOL to handle fixed-point and decimal overflow conditions, regardless of whether these conditions are enabled by Language Environment.

Fortran Condition handling semantics

Fortran language syntax provides limited error handling through the ERR and IOSTAT specifiers that can be coded on Fortran I/O statements, and the STAT specifier that can be coded on Fortran ALLOCATE and DEALLOCATE statements. When ERR, IOSTAT, or STAT are present on a statement, and an error is detected, Fortran semantics take precedence over Language Environment condition handling and control returns immediately to the Fortran program.

Language Environment does not support the use of the Fortran global error option table or extended error handling services.

Arithmetic program interruptions from vector instructions

When one of the following arithmetic program interruptions occurs during the execution of a vector instruction, the interaction with a condition handler is equivalent to the corresponding exception for a scalar instruction:

- Fixed-point overflow exception
- Exponent-overflow exception
- Exponent-underflow exception

- Floating-point divide exception
- Unnormalized-operand exception
- Square-root exception

The unnormalized-operand exception occurs only for vector instructions, but the same considerations apply. Exceptions caused by vector instructions or scalar instructions are comparable in terms of the information available to the condition handler and the possible *resume* and *fix-up and resume* actions that the condition handler can request.

Whenever a condition handler is entered because a vector instruction caused one of the arithmetic program interruptions, the information available to that handler represents an exception for only a single element involved in the vector instruction. Both the condition token provided directly to the user condition handler and the qualifying data that it can use are the same as for the corresponding scalar instruction exception. None of this information reflects anything about a vector instruction. Therefore, the condition handler must treat the condition as though it were a scalar exception in which the equivalent scalar instruction is simply one of the successive elementary operations that comprise the vector instruction.

The same resume and fix-up and resume actions for scalar conditions can be requested when they apply to one of the operations that comprise the vector instruction. For example, when the *resume with new input value* action (result code 60 with a new condition token of CEE0CE) is allowed for the condition and is requested by the user condition handler to provide a new input value for the failing operation, the new input value is used to reexecute the failing vector instruction. This is identical to providing a new input value for a scalar instruction except that a particular element of a vector register is involved. Similarly, when the *resume with new output value* action (result code 60 with a new condition token of CEE0CF) is allowed for the condition and is requested by the user condition handler to provide a new result for the failing operation, the new result that the user condition handler provides replaces the appropriate element of the vector register. This is identical to providing a new result for a scalar instruction in that the new result replaces whatever the instruction left in its result position; in the vector case, the result position is a particular element of a vector register. For the vector instruction, resumption then occurs by continuing to execute the failing vector instruction but starting with the next element.

Because a vector instruction is semantically equivalent to a loop of elementary operations, more than one arithmetic program interruption can occur for the same vector instruction but for different elements. When this occurs, each exception is presented one at a time as a condition to any condition handlers that are involved.

Restrictions on using vector instructions in user-written condition handlers

When a vector instruction causes a program interruption, no vector instructions can be executed from within any user-written condition handler entered for the condition. In addition, if one of these condition handlers incurs another condition, then subordinate user-written condition handlers that are entered for any nested conditions are also prohibited from executing vector instructions. This restriction is not diagnosed and violation of it causes unpredictable results.

PL/I condition handling semantics

Enterprise PL/I for z/OS condition handling semantics are the same as PL/I except that Enterprise PL/I for z/OS, like C, ignores any hardware fixed-point overflow exceptions.

When an exception occurs in a PL/I routine, PL/I language semantics for handling the condition prevail. Therefore, the behavior of PL/I condition handling in applications consisting of only PL/I routines is unchanged under Language Environment.

In PL/I, you handle all runtime conditions by writing ON-units. An ON-unit is a procedure that is established in a block when the ON statement for the ON-unit is run. The ON-unit itself runs when the specified condition in the ON statement is raised. The establishment of an ON-unit applies to all dynamically descendent (inherited from calling procedure) blocks of the block that established it; a condition occurring in a called procedure could result in an ON-unit being run in the caller.

This section provides a high-level view of how condition handling works if an exception occurs in a PL/I routine, and only PL/I routines are on the stack. For a more detailed explanation of PL/I condition handling, refer to *PL/I for MVS & VM Language Reference*. For details about how PL/I condition handling works in an ILC application, see *z/OS Language Environment Writing Interlanguage Communication Applications*.

PL/I condition handling actions

Refer to Figure 68 throughout the following summary of the steps taken to process a condition when there are only PL/I routines on the stack.

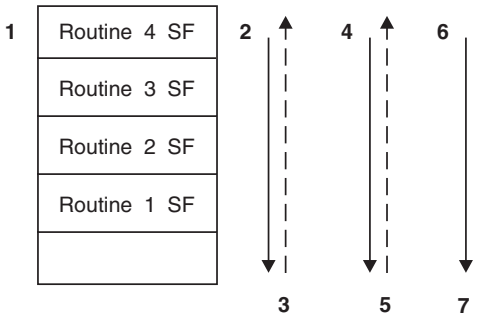

Figure 68. PL/I condition processing

1. Assume a condition such as CONVERSION, which is severity 3, occurs in routine 4.
2. Language Environment moves down the stack towards the earliest stack frame. If a PL/I ON-unit is established for the CONVERSION condition, it is given control.
3. If all stack frames have been visited and no ON CONVERSION unit was found, a message is issued. The condition is promoted to the ERROR condition if it meets any of the qualifications listed in "Promoting conditions to the PL/I ERROR condition" on page 227. Otherwise, the PL/I implicit action occurs. A CONVERSION condition would be promoted to ERROR.

4. The Language Environment condition manager makes another pass of the stack, beginning in Routine 4 where the original condition occurred. If a PL/I ERROR ON-unit is established, it is invoked.
5. If either of the following occurs:
   - An ERROR ON-unit is found, but it does not issue a GOTO out of block
   - No ERROR ON-unit is found

   then the ERROR condition is promoted to T_I_U (Termination Imminent due to an Unhandled Condition). T_I_U maps to the PL/I FINISH condition. (See "Termination imminent step" on page 202 for a discussion of T_I_U.)
6. Language Environment makes yet another pass of the stack, beginning in Routine 4 where the original condition occurred. If a PL/I FINISH ON-unit is established, it is invoked.
7. If all stack frames have been visited, and no FINISH ON-unit issued a GOTO out of block, then Language Environment begins thread termination activities in response to the unhandled condition. Since a message was issued for the CONVERSION condition before it was promoted to the ERROR condition, no message is issued at this time.

Promoting conditions to the PL/I ERROR condition

PL/I promotes the following conditions to the PL/I ERROR condition:

- Any PL/I condition for which the implicit action is to promote to the ERROR condition. The appropriate ONCODE is used. See *PL/I for MVS & VM Language Reference* for details.

Mapping non-PL/I conditions to PL/I conditions

Some non-PL/I conditions map directly to PL/I conditions:

- The Language Environment conditions listed in the first column below map directly to the PL/I conditions in the second column.

  Attention
  ATTENTION

  Decimal divide
  ZERODIVIDE

  Decimal overflow
  FIXEDOVERFLOW

  Exponent overflow
  OVERFLOW

  Exponent underflow
  UNDERFLOW

  Fixed-point divide
  ZERODIVIDE

  Fixed-point overflow
  FIXEDOVERFLOW

  Floating-point divide
  ZERODIVIDE

  These Language Environment conditions map directly to the PL/I conditions. They are detected by the hardware and are normally represented by condition tokens with a facility ID of CEE when raised. They are represented by an IBM condition token only when signaled by the PL/I SIGNAL statement.
- The following map directly to ERROR:

– A Language Environment condition of severity 2, 3, or 4 that does not map to one of the PL/I conditions listed above

  For these conditions, an established ERROR ON-unit is run on the first pass of the stack. In general, the ONCODE is 9999. Some Language Environment conditions that map to ERROR, however, are represented by an ONCODE other than 9999. Examples are some of the conditions raised by the Language Environment math services.

– Any other condition of severity 2, 3, or 4

  For these conditions, an established ERROR ON-unit is run on the first pass of the stack; the ONCODE is 9999.

Additional PL/I condition handling considerations

Keep the following additional PL/I condition handling considerations in mind:

- Non-PL/I conditions of severity 0 or 1 are not promoted to ERROR.
- Promoting any non-PL/I condition to a PL/I condition is prohibited.
- Raising a PL/I condition using the CEESGL callable service is prohibited.
- Issuing a call to CEEMRCR from within a PL/I ON-unit to move the resume cursor is prohibited. But, you can move the resume cursor by using CEEMRCR from within a Language Environment user-written condition handler.

PL/I condition handling example

The following example shows an example of condition handling for PL/I.

```
*PROCESS MACRO;
 /*Module/File Name: IBMDIVZ
 /*********************************************************************/
 /*                                                                   */
 /* PL/I Condition Handling Functions:                                */
 /*                : Establish ZERODIVIDE ON-unit                     */
 /*                : GO TO out of ZERODIVIDE ON-unit                  */
 /*                : PL/I Normal return from ZERODIVIDE ON-unit       */
 /*                : Revert ZERODIVIDE ON-unit                        */
 /*                : PL/I System action on ZERODIVIDE condition       */
 /*                                                                   */
 /* 1. This example establishes a ZERODIVIDE ON-unit.                 */
 /* 2. A subprogram, sdivide, is called and causes a ZERODIVIDE       */
 /*    condition to occur.                                            */
 /* 3. The ZERODIVIDE ON-unit is entered. A GOTO out of the ON-unit   */
 /*    is processed.  The program resumes at the label                */
 /*    "after_1st_zerodivide".                                        */
 /* 4. A new ZERODIVIDE ON-unit is established and it overrides the   */
 /*    current established ZERODIVIDE ON-unit.                        */
 /* 5. The subroutine sdivide is called a second time.                */
 /* 6. The newly established ZERODIVIDE ON-unit is entered. A GOTO    */
 /*    is not executed, and the program resumes at the location       */
 /*    following the instruction that caused the condition. This      */
 /*    is the PL/I normal return action for the ZERODIVIDE condition. */
 /* 7. The established ZERODIVIDE ON-unit is canceled by executing    */
 /*    the REVERT ZERODIVIDE statement.                               */
 /* 8. Sdivide is called a third time.  Because there is no           */
 /*    ZERODIVIDE ON-unit established, the PL/I implicit action       */
 /*    is executed. Namely, the ERROR condition is raised and the     */
 /*    program is terminated.                                         */
 /**                                                                  */
 /*********************************************************************/

 CEPLCND: Proc Options(Main);

    %INCLUDE  CEEIBMAW;
    %INCLUDE  CEEIBMCT;
```

```
dcl in_zdiv_ou1 char (1), in_zdiv_ou2 char(1),fell_thru char(1);
in_zdiv_ou1 = 'N';
in_zdiv_ou2 = 'N';
fell_thru = 'N';
/*****************************************************************/
/* A ZERODIVIDE ON-unit is established when control reaches the */
/* ON statement.                                                 */
/*****************************************************************/
 on zerodivide begin;
    in_zdiv_ou1 = 'Y';
    go to after_1st_zerodivide;
    end;

/*****************************************************************/
/* The first call to sdivide will result in the ZERODIVIDE      */
/* condition being raised. The preceding established ON-unit    */
/* gets control.  Due to a GO TO out of the ON-unit, execution  */
/* resumes immediately at label after_1st_zerodivide. This is   */
/* verified by checking that the flow of control did not resume */
/* at the instruction following the ZERODIVIDE condition.       */
/*****************************************************************/
call sdivide;after_1st_zerodivide:
if (fell_thru = 'Y') then do;
   put skip list ('Error in flow of control after'
      || ' the first call to sdivide. ');
   end;
/*****************************************************************/
/* A new ZERODIVIDE ON-unit is established when control         */
/* reaches the following ON ZERODIVIDE statement.               */
/*****************************************************************/
on zerodivide begin;
   in_zdiv_ou2 = 'Y';
   end;

/*****************************************************************/
/* Subroutine sdivide is called a second time to raise the      */
/* ZERODIVIDE condition.  Control enters the established        */
/* ZERODIVIDE ON-unit.  On exit from the preceding zerodivide   */
/* ON-unit, control returns to the instruction following the    */
/* divide by zero in subroutine SDIVIDE.  A check is made to    */
/* detect if control flowed to the instruction following the    */
/* one that caused the zerodivide condition to be raised.       */
/*****************************************************************/
call sdivide;
if (fell_thru = 'N') then do;
   put skip list
      ('Error in flow of control after second call to cepldiv. ');
   end;
/*****************************************************************/
/* The ZERODIVIDE  ON-unit is canceled by action of the         */
/* REVERT statement.                                             */
/*****************************************************************/
revert zerodivide;
if (in_zdiv_ou1 = 'N' | in_zdiv_ou2 = 'N') then
   put skip list ('Error in flow of control to ON-units');
else  do;
   put skip list ('The PL/I condition handling example'
      || ' will terminate with PL/I message IBM0301');

   /*************************************************************/
   /* Sdivide is called for the third and final time. Because   */
   /* there are no established ON-units, the implicit action    */
   /* for ZERODIVIDE takes place.                               */
   /*************************************************************/
   call sdivide;
   put skip list ('Error in flow of control after third'
      || ' call to sdivide. ');
```

```
      end;

/*********************************************************************/
/* The sdivide subroutine causes a ZERODIVIDE condition.             */
/*********************************************************************/
sdivide: proc;
     dcl int fixed bin (15,0);
     dcl int_2 fixed bin (15,0) init(5);
     dcl int_3 fixed bin (15,0) init(0);
     int = int_2 / int_3;
     fell_thru = 'Y';
end sdivide;

End ceplcnd;
```

Language Environment and POSIX signal handling interactions

If you want to run an application that uses POSIX signal handling functions under z/OS UNIX, you need to know how Language Environment condition handling might affect your application. For a detailed discussion of POSIX signal handling functions, see *z/OS XL C/C++ Programming Guide*. For details about the Language Environment condition handling model, see Chapter 15, "Introduction to Language Environment condition handling," on page 193.

In Language Environment, POSIX signals are distinguished as follows:

Synchronous Signal Handling
: If a signal is delivered to the thread that caused the signal to be sent (the *incurring* thread), and the signal is not blocked, Language Environment's synchronous signal handling semantics apply and you can use Language Environment condition services to handle the condition as described in "Synchronous POSIX signal and Language Environment condition handling interactions" on page 231. Like asynchronous signals, synchronous POSIX signals do not increment the ERRCOUNT error count.

Asynchronous Signal Handling
: Asynchronous signals include the following:

  - Signals generated because of a `kill()`, `raise()`, `pthread_kill()`, `killpg()` or `sigqueue()` (on MVS) in a multithread environment that are delivered to a thread that did not cause the signal to be sent.
  - Signals generated because of a `kill()`, `killpg()` or `sigqueue()` (on MVS) from a different POSIX process.
  - All signals that were blocked when first sent, and later unblocked.
  - Signals generated by an external interrupt not caused by any specific thread. For example, signals can be generated in response to a command typed in at the terminal.
  - SIGCHLD, which is sent to a parent process when one of its child processes terminates.
  - Signals, such as SIGALRM, generated by the kernel.

  Asynchronous signals are handled according to the semantics defined by POSIX. Language Environment condition handling semantics do not apply; for example, the ERRCOUNT runtime option does not increment its error count when an asynchronous signal is sent.

POSIX signal handling can take effect even if no C routine is present on the stack. For example, a COBOL program calls C routine C1. C1 registers a POSIX signal

catcher, then C1 returns control to the COBOL program. The registered POSIX signal handler would still be present to handle a POSIX signal even though the stack no longer contains a C stack frame.

Synchronous POSIX signal and Language Environment condition handling interactions

This topic discusses how Language Environment processes most synchronous POSIX signals. (The term *POSIX signal* includes both POSIX-defined signals and C-language signals.) With the exception of the POSIX signals listed in "POSIX signals that do not enter condition handling" on page 233, normal Language Environment condition handling steps occur after a specific thread is selected as the target of a possible signal delivery. This applies whether the signal was directed to a specific thread or to a process (or processes).

Synchronous signal handling takes effect for the following signals, unless they are blocked by the signal mask:

- A signal you generate by calling the CEESGL (signal a condition) callable service
- A hardware or software exception caused by a specific thread, which will be delivered to the incurring thread

  These are the exceptions typically caught by ESTAE.
- A `kill()` to the current process, a `raise()`, or a `sigqueue()` if the process has but a single thread or the signal happens to be delivered to the thread that issued the `kill()`, `raise()` or `sigqueue()`.
- A `pthread_kill()` issued by a thread to itself

The signal mask is ignored for a signal caused by a program check.

Language Environment processes POSIX signals by using the three general steps of Language Environment condition handling: enablement, condition, and termination imminent, as described in "Enablement step for signals under z/OS UNIX," "Condition step for POSIX signals under Language Environment" on page 232, and "Termination imminent step under z/OS UNIX" on page 233.

Enablement step for signals under z/OS UNIX

Figure 69 on page 232 illustrates how z/OS UNIX determines if a signal is enabled, ignored, or blocked. A few POSIX signals do not go through this process. See "POSIX signals that do not enter condition handling" on page 233 for details.

If a signal is ignored or blocked, the signal does not enter Language Environment synchronous condition handling. If a signal is enabled, z/OS UNIX passes it to the Language Environment enablement step (described in "Enablement step" on page 197). From there, Language Environment either disables the signal, or passes it into the Language Environment condition step.

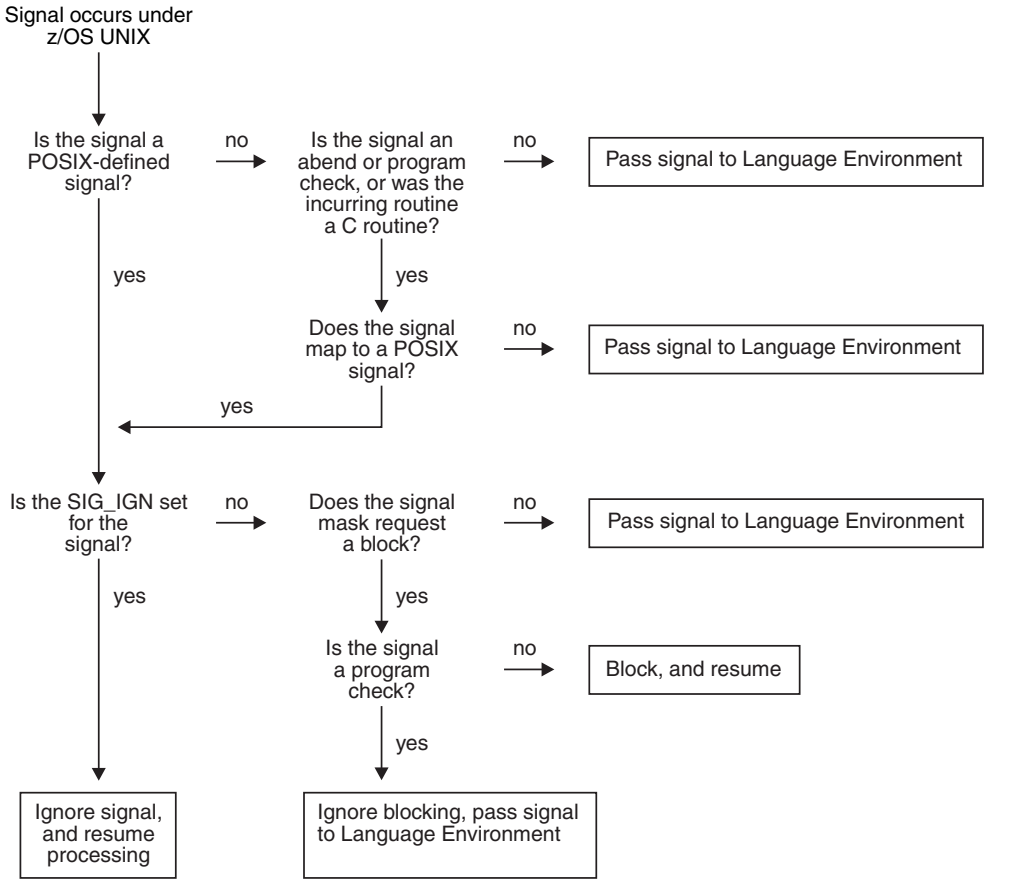

Figure 69. Enablement step for signals under z/OS UNIX

Condition step for POSIX signals under Language Environment

You might find it helpful to read about the Language Environment condition step before reading this topic.

1. At each stack frame (or until the condition is handled, or all of your application's stack frames have been visited), do the following:
   - If a user-written condition handler registered using the CEEHDLR callable service is present on the stack frame, Language Environment gives it a chance to handle the condition.
   - If the signal action was set in a call to `signal()`, the action requested by the signal handler takes place.

     If the signal action was set in a call to `sigaction()`, `sigactionset()` or `bsd_signal()`, the action is ignored until a later step.
2. When all application stack frames have been visited, the incurring stack frame's language defaults are applied.

   C applies its default only if the signal action was set in a call to `signal()`. Otherwise, the signal is percolated.
3. If the signal is percolated from the previous step, the following occurs:
   - If the signal is a POSIX signal whose signal action was set in a call to `sigaction()`, `sigactionset()` or `bsd_signal()`, the POSIX action (SIG_DFL or a catcher) is applied.

- For any other signal, Language Environment applies its default actions (described in Table 34 on page 201). If the condition that the signal represents is of severity 2 or greater, Language Environment promotes the condition to Termination Imminent due to an Unhandled Condition (T_I_U).

Termination imminent step under z/OS UNIX

In a POSIX(ON) environment, Language Environment's termination imminent step takes place as described in "Termination imminent step" on page 202, with one exception: the behavior of the TERMTHDACT runtime option. If POSIX(ON) is set, TERMTHDACT takes effect only if enclave termination results from a program check or abend, not from signal generating functions such as CEESGL, `raise()`, `kill()`, `pthread_kill()`, `killpg()` or `sigqueue()`.

POSIX signals that do not enter condition handling

Certain POSIX signals do not go through the condition handling steps described above:

- SIGKILL and SIGSTOP cannot be caught or ignored; they always take effect.
- SIGCONT immediately begins all stopped threads in a process if SIG_DFL is set.
- SIGTTIN, SIGTTOU, and SIGSTP immediately stop all threads in a process if SIG_DFL is set.

IBM extensions to POSIX signals that do not go through condition handing:

- SIGDUMP cannot be caught or ignored; it always takes effect.
- SIGTHSTOP and SIGTHCONT cannot be caught or ignored; they always take effect.

Chapter 17. Coding a user-written condition handler

This topic describes how you can code a user-written condition handling routine and provides examples for Language Environment-conforming HLLs.

Your user-written condition handler can test for the occurrence of a particular condition by coding a 12-byte condition token or by coding a symbolic feedback code. You can use the Language Environment callable service CEEHDLR to register the condition handler. For information about using CEEHDLR, see "User-written condition handler interface" on page 236.

The USRHDLR runtime option enables you to register a user-written condition handler at stack frame 0 without having to recompile your application to include a call to CEEHDLR. This is particularly useful in supporting Fortran applications because Fortran applications are unable to directly call CEEHDLR.

Nested conditions can be used in your routine as long as the language your routine is written in allows it to be recursively entered. You should design the routine to handle specific conditions rather than designing the routine to handle a wide variety of conditions. You should also code the condition handling routine to respond to the original condition on the first pass of the stack, rather than coding a routine to handle T_I_U on the second pass of the stack. This helps ensure that the handling that you perform addresses the original condition. The more specific the condition is that you design the handler for, the more precise the fix can be.

PL/I considerations

User condition handlers can now be written in PL/I; that is, you can register a PL/I external procedure as a user-written condition handler using the Language Environment callable service CEEHDLR, and unregister it using CEEHDLU.

Restrictions on PL/I user-written condition handlers are:

- If a user handler is registered in the PL/I main routine, it must be unregistered using CEEHDLU before the main returns via a RETURN statement or by reaching the END statement. One implication is that a user handler registered in the main routine does not gain control for the PL/I FINISH condition raised due to normal termination of the main routine.
- You cannot collapse multiple BEGIN blocks using a RETURN statement when CEEHDLR has been invoked within a nested block.
- The following condition handling pseudovariables and built-in functions are still restricted to PL/I ON-units and are not available in user handlers:
  - DATAFIELD
  - ONCHAR
  - ONCODE
  - ONCOUNT
  - ONFILE
  - ONKEY
  - ONLOC
  - ONSOURCE
- User-written condition handlers are not supported in PL/I multitasking applications.

© Copyright IBM Corp. 1991, 2015

Invocation of a procedure registered as a user handler

A PL/I parameter declared as a structure expects an extra PL/I descriptor; however, Language Environment passes argument lists by reference and has no knowledge of PL/I descriptors. Therefore for the parameter list to be received, declare the parameters with the OPTIONS(BYVALUE) option as shown in Figure 70.

```
 PLIHDLR: PROC(ptr1, ptr2, ptr3, ptr4) OPTIONS(BYVALUE);

    DCL (ptr1, ptr2, ptr3, ptr4)  POINTER;
    DCL 1 Current_condition       BASED(ptr1)
⋮                                          ;
    DCL Token FIXED BIN(31)       BASED(ptr2);
    DCL Result_code FIXED BIN(31) BASED(ptr3);
    DCL 1 New_condition           BASED(ptr4)
⋮                                          ;
```

Figure 70. Parameter declarations in a PL/I user-written condition handler

Types of conditions you can handle

A user-written condition handler can, in general, intercept and process any condition, regardless of the language of the routine in which the condition occurred. This means that you can code a user-written condition handler to respond to condition tokens with any of the following facility IDs:

- CEE, representing Language Environment and POSIX-defined conditions
- EDC, representing C and C++ conditions
- IGZ, representing COBOL conditions
- FOR, representing Fortran conditions
- IBM, representing PL/I conditions

In general, your user-written condition handler can use any of the Language Environment condition handling services. Specific exceptions follow:

- The ways in which you can resume after an IGZ condition of severity 2 or above are restricted. See “Resuming execution after an IGZ condition occurs” on page 223 for details.
- If an IBM condition of severity 2 or above was raised, then you cannot issue a resume without first moving the resume cursor.

  This restriction does not apply to IBM conditions of severity 0 or 1, or any IBM conditions signaled using the PL/I SIGNAL statement.
- You cannot promote any condition to an IBM condition (one that belongs to PL/I). You can promote IBM conditions to conditions with facility IDs of CEE, EDC, FOR, or IGZ.

For more information about coding user-written condition handlers to respond to conditions of different facility IDs, see “Using symbolic feedback codes” on page 275.

User-written condition handler interface

Use CEEHDLR to register a user-written condition handler. See *z/OS Language Environment Programming Reference* for more information about CEEHDLR.

User-written condition handlers are automatically unregistered when the stack frame they're associated with is removed from the stack due to a return, GOTO out of block, or a move of the resume cursor. You can, however, call CEEHDLU to explicitly unregister a user-written condition handler. See *z/OS Language Environment Programming Reference* for more information about CEEHDLU.

Recursion is allowed if a handler is registered within a handler, and nested conditions are allowed.

It is invalid to promote a condition without returning a new condition token. You cannot promote a condition to a PL/I condition.

Syntax

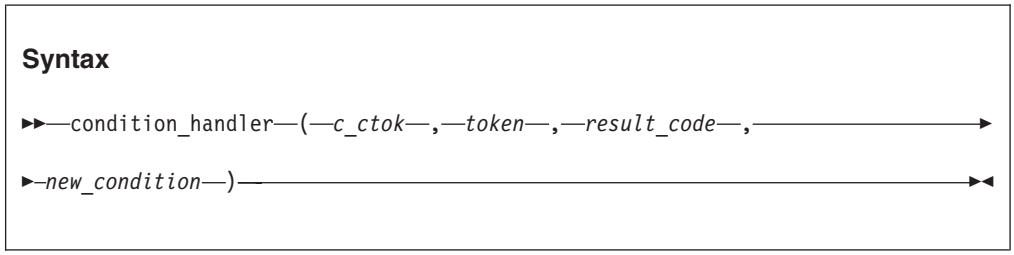

c_ctok **(input)**
A 12-byte condition token that identifies the current condition being processed. Language Environment uses this parameter to tell your condition handler what condition has occurred.

token **(input)**
A 4-byte integer that specifies the token you passed into Language Environment when this condition handler was registered by a call to the CEEHDLR callable service.

result_code **(output)**
A 4-byte integer that contains instructions about responses the user-written condition handler wants Language Environment to make when processing the condition. The *result_code* is passed by reference. Valid responses are shown in Table 40.

Table 40. Valid result codes from user-written condition handlers

Response	Result_Code value	Action
resume	10	Resume at the resume cursor (condition has been handled). Unless the resume cursor has been moved, this response can only be used if the condition being handled specifically allows this form of resumption.
percolate	20	Percolate to the next condition handler. If a *result_code* is not explicitly set by a handler, this is the default *result_code*.
	21	Percolate to the first user-written condition handler for the stack frame that is before the one to which the handle cursor points. This can skip a language-specific condition handler for this stack frame as well as the remaining user-written condition handlers in the queue for this stack frame.

Table 40. Valid result codes from user-written condition handlers (continued)

Response	Result_Code value	Action
promote	30	Promote to the next condition handler.
	31	Promote to the stack frame before the one to which the handle cursor points. This can skip a language-specific condition handler for this stack frame as well as any remaining user-written condition handler in the queue at this stack frame.
	32	Promote and restart condition handling at the first condition handler of the stack frame of the handle cursor.
fix-up and resume	60	Provide the fix-up actions indicated by *new_condition* and by any qualifying data values that apply to the condition; then resume execution. This response is only allowed if the resume cursor has not been moved and only if the condition being handled allows this response. *new_condition* must be set by the condition handler to request one of the specific actions for the condition.

If *result_code* is not explicitly set by the handler, the default response is `Value=20, Percolate to the next condition handler.`

new_condition **(output)**
A 12-byte condition token that represents either the promoted condition for a *promote* response (*result_code* values of 30, 31, and 32) or the requested fix-up actions for a *fix-up and resume* response (*result_code* value of 60).

When a *result_code* of 60, denoting *fix-up and resume*, is set by the condition handler, *new_condition* must be set to a condition token that indicates what fixup action is requested. Many conditions, including mathematical routines, use the condition tokens in Table 41 to resume with corrective action (either *resume with new input value* or *resume with new output value*). For some conditions, there may be other condition tokens that can be provided by the condition handler in *new_condition* to request specific fixup actions.

Table 41. Designating requested fixup actions

Symbolic feedback code (fc)	Severity	Message number	Fixup action
CEE0CE	1	398	Fixup with new input value. The service that signaled the condition is invoked again with the new argument value provided by the handler as qualifying data.
CEE0CF	1	399	Fixup with new output value. The service that signaled the condition returns as its result, the value provided by the handler as qualifying data.

Registering user-written condition handlers using USRHDLR

Use the USRHDLR runtime option to register a user-written condition handler to run at one of the following times (or both):

- At stack frame 0 – the condition handler specified as `lmname` (see syntax below) is invoked after the default HLL condition handler for the main program, but before the HLL condition handler for stack frame 0. The condition percolated or promoted by this user-written condition handler is not passed to any other condition handler.
- The condition handler specified as `lmname2` is given control after each condition completes the enablement phase, but before any other registered user condition handler is given control.

Syntax

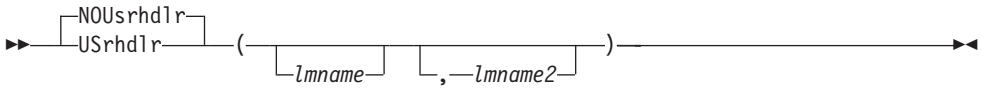

NOUsrhdlr
Specifies that no user-written condition handler is registered.

USrhdlr
Specifies that a user-written condition handler is registered.

lmname
The entry point name or alias name of a load module that contains the user-written condition handler to be registered at stack frame 0.

lmname2
The entry point name or alias name of a load module that contains the user-written condition handler to be registered to get control after the enablement phase and before any other condition handler.

The condition handlers registered by the USRHDLR runtime option can return any of the result codes allowed for a condition handler registered with the CEEHDLR callable service.

For more information about using the USRHDLR runtime option, see *z/OS Language Environment Programming Reference*.

Nested conditions

A *nested condition* is one that occurs within a C/C++ signal handler, PL/I ON-unit, or user-written condition handler invoked to handle a condition. When conditions occur during the condition handling process, the handling of the original condition is suspended and further action is taken based on the state of the condition handling.

The DEPTHCONDLMT runtime option indicates whether nested conditions are permitted while your application runs. If you specify DEPTHCONDLMT(1), handling of the initial condition is allowed, but any additional nested condition causes your application to abend. If you specify DEPTHCONDLMT(0), an unlimited number of nested conditions is permitted. If you specify some other integer value for DEPTHCONDLMT, Language Environment allows handling of the initial condition plus additional levels of nested conditions before your application abends (see *z/OS Language Environment Programming Reference* for more information).

If a nested condition is allowed within a user-written condition handler, Language Environment begins handling the most recently raised condition. After the most recently raised condition is properly handled, execution begins at the instruction pointed to by the resume cursor, the instruction following the point where the condition occurred. If a user-written condition handler is registered using CEEHDLR within another user condition handler, nested conditions are handled by the most recently registered condition handler.

If any HLL or user-written condition handler moves the resume cursor closer to the oldest stack frame both conditions are considered handled. The application resumes running at the instruction pointed to by the resume cursor. The resume cursor can be moved using the CEEMRCR callable service, or by language constructs such as GOTO.

Nested conditions in applications containing a COBOL program

You must take special care when dealing with nested conditions in ILC applications. For example, the following scenario can cause your application to abend:

1. A nested condition occurs within a COBOL user-written condition handler (CBLUHDLR). Condition handlers written in COBOL must be compiled with Enterprise COBOL for z/OS, COBOL for OS/390 & VM, COBOL for MVS & VM, or COBOL/370.
2. The COBOL user-written condition handler calls another user-written condition handler established using CEEHDLR to handle the nested condition.
3. The user-written condition handler percolates the condition.

In this scenario, the condition can be percolated back to the stack frame where the original condition occurred. Since condition handling actions for the routine where the condition originally occurred include calling CBLUHDLR, CBLUHDLR can be recursively entered. This is not permitted under COBOL/370, and your application abends.

If CBLUHDLR is compiled with Enterprise COBOL for z/OS, COBOL for OS/390 & VM, or COBOL for MVS & VM; then the recursive call is allowed if RECURSIVE is specified in the PROGRAM-ID. A rule of thumb is to ensure that COBOL user-written condition handlers that call other user-written condition handlers do not regain control or, make sure they are capable of being recursively entered.

Using Language Environment condition handling with nested COBOL programs

If your application contains both nested COBOL programs and calls to Language Environment condition handling services, keep the following in mind:

- Do not call CEEHDLR from a nested COBOL program.
- Do not call CEEMRCR with a 1 *type_of_move* from a user handler associated with a stack frame that was called by a nested COBOL program. In Figure 71 on page 241, Program A calls nested Program B. Program B calls Program C, which registers a user-written condition handler, UWCHC. UWCHC cannot call CEEMRCR with a 1 *type_of_move*, which would move the resume cursor back to nested Program B.

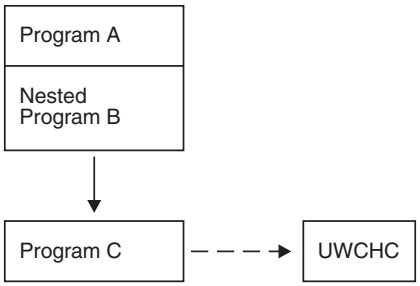

Figure 71. Restricted type_of_move If COBOL nested programs are present

Examples with a registered user-written condition handler

This section contains C, C++, COBOL, PL/I, and assembler examples in which user-written condition handlers are registered to respond to specific conditions that might occur in an application.

- In "Handling a divide-by-zero condition in C, C++, COBOL, or PL/I," C, C++, COBOL, and PL/I call CEEHDLR and CEEMRCR to handle a divide-by-zero condition.
- In "Handling an out-of-storage condition in C, C++, COBOL, or PL/I" on page 249, C, C++, COBOL, and PL/I call CEEHDLR and CEEMRCR to handle an out-of-storage condition.
- In "Signaling and handling a condition in a C/C++ routine" on page 259, C or C++ call CEEHDLR CEEGQDT, and CEEMRCR to respond to a signaled condition.
- In "Handling a divide-by-zero condition in a COBOL program" on page 261, COBOL calls CEEHDLR, CEE3GRN, and CEEMOUT to respond to the significance condition (which was enabled using CEE3SPM).
- In "Handling a program check in an assembler routine" on page 265, assembler calls CEEHDLR to register a condition handler that responds to a program check.

Handling a divide-by-zero condition in C, C++, COBOL, or PL/I

Figure 72 on page 242 and the following examples provide an illustration of how user-written condition handlers can handle conditions such as a divide-by-zero in a C, C++, COBOL, or PL/I application. In the C or C++ examples in "C or C++ handling a divide-by-zero condition" on page 242, the COBOL examples in "COBOL handling a divide-by-zero condition" on page 244, and the PL/I examples in "PL/I handling a divide-by-zero condition" on page 247, the main routine calls CEEHDLR to register the user-written condition handler ("USRHDLR program (COBOL)" on page 245 for COBOL). The main routine then calls the DIVZERO routine (Figure 73 on page 245 for COBOL), in which a divide-by-zero exception occurs.

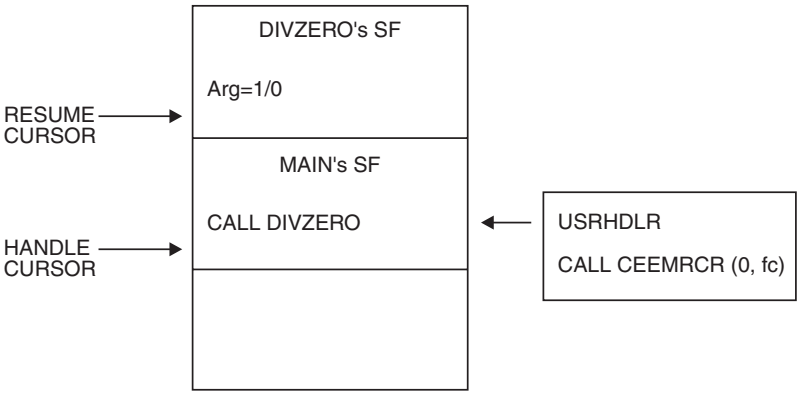

Figure 72. Handle and resume cursor movement as a condition is handled

Divide-by-zero is enabled as a condition in the following steps:

1. The handle cursor, which first points at DIVZERO's stack frame, moves down the stack to the USRHDLR condition handler, the first user-written condition handler established to handle conditions for the main routine's stack frame.
2. For divide-by-zero conditions, USRHDLR issues a call to CEEMRCR (Move Resume Cursor Relative to Handle Cursor) with a 0 *type_of_move*, meaning move the resume cursor to the call return point of the stack frame associated with the handle cursor. (The call return point is the next instruction after the call to the DIVZERO routine.)
3. Execution resumes in the main routine at this point. A divide-by-zero condition is the only type of program interrupt for which USRHDLR causes a resume.
4. All other program interrupts are percolated to the next condition handler on the stack.

For simplicity, the examples shown in this topic do not include calls to some Language Environment services that could also be useful for handling conditions in your application. For example, you might code in the USRHDLR routine a call to the CEE3GRN callable service in order to get the name of the routine that incurred the condition.

C or C++ handling a divide-by-zero condition

The following example contains the C/C++ routine that performs the tasks involved with handling a divide-by-zero condition in C, C++, COBOL, or PL/I.

```
#pragma noinline(divzero)
/*Module/File Name:  EDCDIVZ  */
/************************************************************/
/*                                                          */
/*  MAIN                .-> DIVZERO                         */
/*  - register handler  |   - force a divide-by-zero       */
/*  - call DIVZERO     --'                                  */
/*  ==> "resume point"                                      */
/*  - unregister handler                                    */
/*                        USRHDLR:                          */
/*                        - if divide-by-zero               */
/*                          - move resume cursor            */
/*                          - resume at "resume point"      */
/*                                                          */
/************************************************************/
#include <stdio.h>
#include <string.h>
#include <stdlib.h>
#include <leawi.h>
```

```
#include <ceeedcct.h>

#ifdef __cplusplus
extern "C" {
#endif

   void usrhdlr(_FEEDBACK *, _INT4 *, _INT4 *, _FEEDBACK *);

#ifdef __cplusplus
}
#endif

void divzero(int);

int main(void) {

 _FEEDBACK fc;
 _INT4 divisor;
 _INT4 token;
 _ENTRY pgmptr;
 /* Register a user-written condition handler.            */
 pgmptr.address = (_POINTER)&usrhdlr;
 pgmptr.nesting = NULL;
 token = 97; CEEHDLR (&pgmptr, &token, &fc);
 if ( _FBCHECK ( fc , CEE000 ) != 0 ) {
    printf( "CEEHDLR failed with message number %d\n",
       fc.tok_msgno);
    exit(99);
   }
 printf("MAIN: Registered USRHDLR.\n");

 /* Call DIVZERO to divide by zero and drive USRHDLR      */
 divisor = 0;
 divzero(divisor);
 printf("MAIN: Resumption after DIVZERO.\n");

 /* Unregister the user condition handler.                */
 CEEHDLU (&pgmptr, &fc);
 if ( _FBCHECK ( fc , CEE000 ) != 0 ) {
    printf( "CEEHDLU failed with message number %d\n",
       fc.tok_msgno);
    exit(99);
   }

 printf("MAIN: Unregistered USRHDLR.\n");
} /* end main */

void divzero(int arg) {
 printf("  DIVZERO: Starting.\n");
 arg = 1 / arg;
 printf("  DIVZERO: Returning to its caller.\n");
} /* end divzero */

/*************************************************************/
/* usrhdlr will handle DIVIDE-BY-ZERO conditions...       */
/*    all others will be percolated.                         */
/*************************************************************/

void usrhdlr(_FEEDBACK *cond,_INT4 *input_token,
             _INT4 *result, _FEEDBACK *new_cond)
 {
  _INT4 move_type_0 = 0;
  _INT4 move_type_1 = 1;
  _FEEDBACK feedback;

  /* values for handling the conditions */
  #define resume      10
```

```
  #define percolate   20
  #define promote     30
  #define promote_sf  31
  printf(">>> USRHDLR: Entered User Handler \n");
  printf(">>> passed token value is %d\n",*input_token);
/* check if the DIVIDE-BY-ZERO message (0C9) */
  if (cond->tok_msgno == 3209) {
      CEEMRCR (&move_type_0, &feedback);
      if ( _FBCHECK ( feedback , CEE000 ) != 0 ) {
         printf( "CEEMRCR failed with message number %d\n",
           feedback.tok_msgno);
         exit(99);
        }
      *result = resume;
      printf(">>> USRHDLR: Resuming execution\n");
     }
  else {                      /* not DIVIDE-BY-ZERO */
        *result = percolate;
        printf(">>> USRHDLR: Percolating it\n");
       }
} /* end usrhdlr */
```

COBOL handling a divide-by-zero condition

The program in the following example registers a user-written condition handler, calls the DIVZERO subroutine, and unregisters the condition handler on return from the subroutine.

```
CBL LIB,QUOTE,NODYNAM,NOOPT
      *Module/File Name: IGZTDIVZ
      ******************************************************
      *                                                    *
      *  EXCOND               .-> DIVZERO                  *
      *  - register handler   |   - force a divide-by-zero *
      *  - call DIVZERO     --'                            *
      *  ==> "resume point"                                *
      *  - unregister handler                              *
      *                       USRHDLR                      *
      *                       - if divide-by-zero, then:   *
      *                         - move resume cursor       *
      *                         - resume at "resume point" *
      *                                                    *
      ******************************************************

       IDENTIFICATION DIVISION.
       PROGRAM-ID.    EXCOND.

       DATA DIVISION.
       WORKING-STORAGE SECTION.
       77  DIVISOR         PIC S9(9) BINARY.
      **
      **  Declarations for condition handling
      **
       77  TOKEN           PIC X(4).
       77  PGMPTR          USAGE IS PROCEDURE-POINTER.
       01  FC.
           02  Condition-Token-Value.
           COPY  CEEIGZCT.
               03  Case-1-Condition-ID.
                   04  Severity        PIC S9(4) BINARY.
                   04  Msg-No          PIC S9(4) BINARY.
               03  Case-2-Condition-ID
                           REDEFINES Case-1-Condition-ID.
                   04  Class-Code      PIC S9(4) BINARY.
                   04  Cause-Code      PIC S9(4) BINARY.
               03  Case-Sev-Ctl    PIC X.
               03  Facility-ID     PIC XXX.
           02  I-S-Info        PIC S9(9) BINARY.
```

```
       PROCEDURE DIVISION.
       PARA-CND01A.
      ************************************************
      ** Register a user-written condition handler. **
      ************************************************
           SET PGMPTR TO ENTRY "USRHDLR".
           MOVE ZERO TO TOKEN.
           CALL "CEEHDLR" USING PGMPTR TOKEN FC.
           IF CEE000 of FC  THEN
               DISPLAY "EXCOND: REGISTERED USRHDLR."
           ELSE
               DISPLAY "CEEHDLR failed with msg "
                   Msg-No of FC UPON CONSOLE
               STOP RUN
           END-IF.
      ************************************************************
      ** Call DIVZERO to force a divide-by-zero and drive USRHDLR **
      ************************************************************
           MOVE 00 TO DIVISOR.
           CALL "DIVZERO" USING DIVISOR.
           DISPLAY "EXCOND: RESUMED AFTER DIVZERO.".
      ************************************************
      ** Unregister the user-written condition handler.**
      ************************************************
           CALL "CEEHDLU" USING PGMPTR FC.
           IF CEE000 of FC  THEN
               DISPLAY "EXCOND: UNREGISTERED USRHDLR."
           ELSE
               DISPLAY "CEEHDLU failed with msg "
                   Msg-No of FC UPON CONSOLE
               STOP RUN
           END-IF.

           GOBACK.
       END PROGRAM EXCOND.
```

Figure 73 shows the subroutine DIVZERO that generates the divide-by-zero condition.

```
CBL LIB,QUOTE,NODYNAM,NOOPT
      *Module/File Name: IGZTDIVS
       IDENTIFICATION DIVISION.
       PROGRAM-ID. DIVZERO.

       DATA DIVISION.
       LINKAGE SECTION.
       01  ARG     PIC S9(9) BINARY.

       PROCEDURE DIVISION USING ARG.
           DISPLAY "  DIVZERO: STARTING.".
           COMPUTE ARG = 1 / ARG.
           DISPLAY "  DIVZERO: RETURNING TO ITS CALLER.".

           GOBACK.
       END PROGRAM DIVZERO.
```

Figure 73. DIVZERO program (COBOL)

USRHDLR program (COBOL): The following example shows the user-written condition handler registered by EXCOND to handle the divide-by-zero condition. When the divide-by-zero condition arises, USRHDLR calls CEEMRCR with a 0 *type of move*. Doing so moves the resume cursor to the point in EXCOND after the call to DIVZERO.

```
CBL LIB,QUOTE
      *Module/File Name: IGZTDIVU
      ******************************************************
      *                                                    *
      * USRHDLR                                            *
      *                                                    *
      ******************************************************
       IDENTIFICATION DIVISION.
       PROGRAM-ID. USRHDLR.
       DATA DIVISION.
       WORKING-STORAGE SECTION.
       01  MISC-VARIABLES.
           02  MOVE-TYPE-0     PIC S9(9) BINARY VALUE ZERO.
           02  MOVE-TYPE-1     PIC S9(9) BINARY VALUE 1.
       01  FEEDBACK.
           02  FB-SEVERITY     PIC 9(4)  BINARY.
           02  FB-DETAIL       PIC X(10).
      *
       LINKAGE SECTION.
      ******************************************************
      *                                                    *
      *  Note:  the symbolic names of the condition tokens *
      *  for S/370 program interrupt codes 0C1 thru 0CF    *
      *  are CEE341 through CEE34F                         *
      *                                                    *
      ******************************************************
       01  TOKEN           PIC X(4).
       01  RESULT-CODE     PIC S9(9) BINARY.
           88 RESUME           VALUE +10.
           88 PERCOLATE        VALUE +20.
           88 PERC-SF          VALUE +21.
           88 PROMOTE          VALUE +30.
           88 PROMOTE-SF       VALUE +31.

       01  CURRENT-CONDITION.
           02  Condition-Token-Value.
           COPY  CEEIGZCT.
               03  Case-1-Condition-ID.
                   04  Severity        PIC S9(4) BINARY.
                   04  Msg-No          PIC S9(4) BINARY.
               03  Case-2-Condition-ID
                         REDEFINES Case-1-Condition-ID.
                   04  Class-Code      PIC S9(4) BINARY.
                   04  Cause-Code      PIC S9(4) BINARY.
               03  Case-Sev-Ctl    PIC X.
               03  Facility-ID     PIC XXX.
           02  I-S-Info        PIC S9(9) BINARY.

       01  NEW-CONDITION.
           02  Condition-Token-Value.
           COPY  CEEIGZCT.
               03  Case-1-Condition-ID.
                   04  Severity        PIC S9(4) BINARY.
                   04  Msg-No          PIC S9(4) BINARY.
               03  Case-2-Condition-ID
                         REDEFINES Case-1-Condition-ID.
                   04  Class-Code      PIC S9(4) BINARY.
                   04  Cause-Code      PIC S9(4) BINARY.
               03  Case-Sev-Ctl    PIC X.
               03  Facility-ID     PIC XXX.
           02  I-S-Info        PIC S9(9) BINARY.

       PROCEDURE DIVISION USING CURRENT-CONDITION TOKEN
                                RESULT-CODE NEW-CONDITION.

           DISPLAY ">>> USRHDLR: Entered User Condition Handler ".
           IF CEE349 of CURRENT-CONDITION THEN
```

```
      ************************************************************
      *     Expected condition, divide by zero, occurred...      *
      *     move resume cursor to stack frame which registered *
      *     the handler, and resume execution at that point.     *
      ************************************************************
              CALL "CEEMRCR" USING MOVE-TYPE-0 FEEDBACK
              SET RESUME TO TRUE
              DISPLAY ">>> USRHDLR: Resuming execution"
          ELSE
      ************************************************************
      *        UNexpected condition encountered.. percolate it!*
      ************************************************************
              SET PERCOLATE TO TRUE
              DISPLAY ">>> USRHDLR: Percolating it"
          END-IF.

          GOBACK.
       END PROGRAM USRHDLR.
```

PL/I handling a divide-by-zero condition

The following example shows the PL/I program that performs the tasks in "Handling a divide-by-zero condition in C, C++, COBOL, or PL/I" on page 241.

```
*Process macro;
 /* Module/File Name: IBMHDLR                          */
 /****************************************************/
 /*                                                  */
 /*  EXCOND               .-> DIVZERO                */
 /*  - register handler   |   - force a divide-by-0  */
 /*  - call DIVZERO     --'                           */
 /*  ==> "resume point"                               */
 /*  - unregister handler                             */
 /*                          USRHDLR:                 */
 /*                          - if divide-by-zero then */
 /*                            - move resume cursor   */
 /*                            - resume at "resume"   */
 /*                                        point      */
 /*                                                  */
 /****************************************************/
 Excond :Proc Options(Main);

   /************************************************/
   /* Important elements are found in these includes */
   /* - feedback declaration                       */
   /* - fbcheck macro call                         */
   /* - condition tokens such as CEE000            */
   /* - entry declarations such as ceehdlr         */
   /************************************************/

   %include ceeibmct;
   %include ceeibmaw;

   dcl Usrhdlr external entry;

   dcl 1 fback feedback;
   dcl divisor fixed bin(31);
   dcl token   fixed bin(31);

   /******************************************/
   /* Register a user-written condition handler */
   /******************************************/
   token = 97;
   Call ceehdlr(Usrhdlr, token, fback);
   If fbcheck (fback, cee000) then
     display ('MAIN: registered USRHDLR');
   else
     do;
```

```
      display ('CEEHDLR failed with message number ' ||
               fback.MsgNo);
      stop;
    end;
  /*******************************************/
  /* Call DIVZERO to divide by zero          */
  /*  and drive USRHDLR                      */
  /*******************************************/
  divisor = 0;
  call divzero (divisor);
  display ('MAIN: resumption after DIVZERO');

  /*******************************************/
  /* Unregister the user condition handler   */
  /*******************************************/

  Call ceehdlu (Usrhdlr, fback);
  If fbcheck (fback, cee000) then
    display ('MAIN: unregistered USRHDLR');
  else
    do;
      display ('CEEHDLU failed with message number ' ||
               fback.MsgNo);
      stop;
    end;

    /*******************************************/
    /* Subroutine that simply raises ZERODIVIDE  */
    /*******************************************/
    divzero: proc (arg);
      dcl arg fixed bin(31);

      display('  DIVZERO: starting.');
      arg = 1 / arg;
      display('  DIVZERO: Returning to its caller');

    end divzero;

end Excond;
```

The following example is the usrhdlr program (PL/I) to handle divide-by-zero conditions.

```
*Process macro;
 /* Module/File Name: IBMMRCR                      */
 /************************************************/
 /*                                                */
 /* Usrhdlr - the user handler routine.            */
 /* Handle DIVIDE-BY-ZERO conditions,              */
 /*     percolate all others.                      */
 /*                                                */
 /************************************************/
 Usrhdlr:  Proc (@condtok, @token, @result, @newcond)
           options(byvalue);

   %include ceeibmct;
   %include ceeibmaw;

   /* Parameters */
   dcl  @condtok    pointer;
   dcl  @token      pointer;
   dcl  @result     pointer;
   dcl  @newcond    pointer;
   dcl 1 condtok based(@condtok) feedback;
   dcl token  fixed bin(31) based(@token);
   dcl result fixed bin(31) based(@result);
   dcl 1 newcond based(@newcond) feedback;
```

```
dcl 1 fback feedback;
dcl move_type fixed bin(31);
dcl resume     fixed bin(31) static initial(10);
dcl percolate  fixed bin(31) static initial(20);
dcl promote    fixed bin(31) static initial(30);
dcl promote_sf fixed bin(31) static initial(31);
display ('>>> USRHDLR: Entered user handler');
display ('>>> USRHDLR: passed token value is ' ||
         token);

/* Check if this is the divide-by-zero token */
if fbcheck (condtok, cee349) then
  do;
    move_type = 0;
    call ceemrcr (move_type, fback);
    If fbcheck (fback, cee000) then
      do;
        result = resume;
        display ('>>> USRHDLR: Resuming execution');
      end;
    else
      do;
        display
        ('CEEMRCR failed with message number ' ||
          fback.MsgNo);
        stop;
      end;
  end;
else     /* something besides div-zero token */
  do;
    result = percolate;
    display ('>>> USRHDLR: Percolating it');
  end;
end Usrhdlr;
```

Handling an out-of-storage condition in C, C++, COBOL, or PL/I

You can use the Language Environment condition handling services to resolve an out-of-storage condition in your application. In the user-written condition handler examples that follow, CEEGTST and CEECZST are used to get and reallocate heap storage. CEEMRCR is also used to handle an out-of-storage condition in a user subroutine, and allow the subroutine to be invoked again. For the user code that corresponds to this scenario, see:

- The examples in "C/C++ examples using CEEHDLR, CEEGTST, CEECZST, and CEEMRCR" on page 250 for C or C++
- The examples in "COBOL examples using CEEHDLR, CEEGTST, CEECZST, and CEEMRCR" on page 253 for COBOL
- The examples in "PL/I examples using CEEHDLR, CEEGTST, CEECZST, and CEEMRCR" on page 256 for PL/I

in which:

1. The out-of-storage condition arises in your subroutine, and Language Environment gives control to the user-written condition handler you have registered through CEEHDLR for the out-of-storage condition.
2. The condition handler detects the out-of-storage condition and calls CEEMRCR to set the resume cursor to resume execution at the return address of your subroutine call.
3. On return from the user condition handler, your main program regains control as if your subroutine has actually run.

4. The main program tests a completion indicator and discovers that the subroutine did not actually complete.
5. Your program then recognizes that it has been invoked with insufficient storage for maximum efficiency, and frees some previously allocated storage.
6. The subroutine is invoked a second time and completes successfully.

See *z/OS Language Environment Programming Reference* for the syntax of all Language Environment condition handling services.

C/C++ examples using CEEHDLR, CEEGTST, CEECZST, and CEEMRCR

The following routine calls CEEHDLR to register a user-written condition handler for the out-of-storage condition, calls CEEGTST to allocate heap storage, and calls CEECZST to alter the size of the heap storage requested.

```
/*Module/File Name:  EDCOOSR  */
 /*************************************************************/
 /*                                                           */
 /* Function  : CEEHDLR - Register user condition handler */
 /*           : CEEGTST - Get Heap Storage                */
 /*           : CEECZST - Change the size of heap element */
 /*                                                           */
 /* 1. A user condition handler CECNDHD is registered.    */
 /* 2. A large amount of HEAP storage is allocated.       */
 /* 3. A function sub() is called that is known to        */
 /*    require a large amount of storage.  It is not      */
 /*    known whether the storage for sub() is             */
 /*    available during this run of the application.      */
 /* 4. If sufficient storage for sub() is not available,  */
 /*    a storage condition is generated by Language       */
 /*    Environment.                                       */
 /* 5. CECNDHD gets control and sets resume at the        */
 /*    next instruction following the call to sub().      */
 /* 6. A test for completion of sub() is made after       */
 /*    the function call.  If sub() did not complete, a   */
 /*    large amount of storage is freed, and sub() is     */
 /*    invoked a second time.                             */
 /* 7. sub() runs successfully once it has enough storage */
 /*    available.                                         */
 /*                                                           */
 /*    Note: In order for this example to complete        */
 /*    successfully, the FREE suboption of the HEAP       */
 /*    runtime option must be in effect.                 */
 /*                                                           */
 /*************************************************************/
#include <stdio.h>
#include <string.h>
#include <leawi.h>
#include <ceeedcct.h>
#define BIGSTOR 300000
#define BIGINDX BIGSTOR-1

#ifdef __cplusplus
extern "C" {
#endif

 void CECNDHD(_FEEDBACK *, _INT4 *, _INT4 *, _FEEDBACK *);

#ifdef __cplusplus
}
#endif

 char *sub( );
 void main ()
 {
```

```
  _FEEDBACK feedback;
  _ENTRY pgmptr;
  _POINTER addrss;
  _INT4 token;
  _INT4 hpsize;
  _INT4 heapid;
  _INT4 newsize;
  char *RAN;
/*************************************************************/
/* Call CEEHDLR to register user condition handler CECNDHD.*/
/*************************************************************/
  pgmptr.address = (_POINTER)&CECNDHD;
  pgmptr.nesting = NULL;
  token = 97;
  CEEHDLR(&pgmptr, &token, &feedback);
  if ( _FBCHECK ( feedback , CEE000 ) != 0 )
     printf( "CEEHDLR failed with message number %d\n",
             feedback.tok_msgno);
  else
     printf( "Condition handler registered\n" );
/*************************************************************/
/* Call function sub().  When it becomes active, an out-   */
/* of-storage condition arises if the region is too small. */
/*************************************************************/
 heapid = 0;
 hpsize = BIGSTOR;
 CEEGTST ( &heapid , &hpsize , &addrss , &feedback );
 if ( _FBCHECK ( feedback , CEE000 ) != 0 )
    printf("CEEGTST failed with message number %d\n",
            feedback.tok_msgno);
 RAN = sub ( );
 if (RAN != "r")
   {
  /*********************************************************/
  /* If sub() did not run, reduce the size of allocated  */
  /*  storage and call it a second time.                 */
  /*********************************************************/
     newsize = 2000;
     CEECZST ( &addrss, &newsize, &feedback );
     if ( _FBCHECK ( feedback , CEE000 ) != 0 )
        printf( "CEECZST failed with message number %d\n",
                feedback.tok_msgno);
     printf("Function sub is called for the 2nd time\n");
     RAN = sub ( );
     printf("Function sub ran successfully\n", *RAN);
   };
} /* end of main */
char *sub( )
{
  char w2[BIGSTOR];
  w2[BIGINDX] = 'B';
  return( "r" );
} /* end of sub */
```

When any condition occurs in the main routine, user condition handler CECNDHD in the following routine receives control and tests for the out-of-storage condition. If the out-of-storage condition has occurred, then CECNDHD calls CEEMRCR to return to the instruction in the main routine after the call to function `sub()` that produced the out-of-storage condition.

```
/*Module/File Name:  EDCOOSH  */
 /*********************************************************/
 /*                                                       */
 /* Function  : CEEMRCR - Move resume cursor relative     */
 /*                       to handle cursor.               */
 /*                                                       */
 /* CECNDHD is a user condition handler that is registered */
```

```
/* by a main routine.  CECNDHD gets control from the      */
/* condition manager and tests for the STORAGE CONDITION. */
/* If a STORAGE CONDITION is detected, the resume cursor  */
/* is moved so that control is returned to the caller of  */
/* the routine encountering the STORAGE CONDITION.        */
/*                                                        */
/**********************************************************/
#include <stdio.h>
#include <string.h>
#include <leawi.h>
#include <ceeedcct.h>
#define RESUME 10
#define PERCOLATE 20
#define PROMOTE 30
#define PROMOTE_STACK_FRAME 31

#ifdef __cplusplus
extern "C" {
#endif

void CECNDHD (_FEEDBACK *, _INT4 *, _INT4 *, _FEEDBACK *);

#ifdef __cplusplus
}
#endif


void CECNDHD (_FEEDBACK *cond, _INT4 *input_token,
              _INT4 *result, _FEEDBACK *new_cond)

{
 _FEEDBACK feedback;
 _INT4 movetyp;
 /*********************************************************/
 /* Determine if entry was for OUT-OF-STORAGE condition.   */
 /*********************************************************/
 if ( _FBCHECK (*cond , CEE0PD) == 0 )
  {
    printf("SUB not run because of storage condition.\n");
    /*******************************************************/
    /* Call CEEMRCR to move resume cursor.                 */
    /*******************************************************/
    movetyp = 0;
    CEEMRCR ( &movetyp , &feedback );
    if ( _FBCHECK ( feedback , CEE000) != 0 )
     {
       *result = PERCOLATE;
     }
    else
     {
       *result = RESUME;
     }
  }
 else
  {
   /*******************************************************/
   /* Percolate all conditions except for OUT-OF-STORAGE. */
   /*******************************************************/
   *result = PERCOLATE;
  }
}
```

COBOL examples using CEEHDLR, CEEGTST, CEECZST, and CEEMRCR

The following program calls CEEHDLR to register a user-written condition handler for the out-of-storage condition, calls CEEGTST to allocate heap storage, and calls CEECZST to alter the size of the heap storage requested.

```
CBL LIB,QUOTE,NODYNAM
      *Module/File Name: IGZTOOSR
      ************************************************************
      *                                                          *
      *  CECNDXP - Call the following Language Environment       *
      *            services:                                     *
      *                                                          *
      *              : CEEHDLR - Register user condition handler *
      *              : CEEGTST - Get Heap Storage                *
      *              : CEECZST - Change the size of heap element *
      *                                                          *
      *    1. A user condition handler CECNDHD is registered.    *
      *    2. A large amount of HEAP storage is allocated.       *
      *    3. A subroutine CESUBXP is called that is known to    *
      *       require a large amount of storage.  It is not known*
      *       whether the storage for CESUBXP is available during*
      *       this run of the application.                       *
      *    4. If sufficient storage for CESUBXP is not available,*
      *       a storage condition is generated by Language       *
      *       Environment.                                       *
      *    5. CECNDHD gets control and sets resume at the        *
      *       next instruction following the call to CESUBXP.    *
      *    6. A test for completion of CESUBXP is made after     *
      *       the subroutine call.  If CESUBXP did not complete, *
      *       a large amount of storage is freed, and CESUBXP    *
      *       is invoked a second time.                          *
      *    7. CESUBXP runs successfully once it has enough       *
      *       storage available.                                 *
      *                                                          *
      *       Note: In order for this example to complete        *
      *       successfully, the FREE suboption of the HEAP       *
      *       runtime option must be in effect.                  *
      ************************************************************
       IDENTIFICATION DIVISION.
       PROGRAM-ID.    CECNDXP.
       DATA DIVISION.
       WORKING-STORAGE SECTION.
       01  TOKEN                   PIC X(4).
       01  HEAPID                  PIC S9(9) BINARY.
       01  HPSIZE                  PIC S9(9) BINARY.
       01  NEWSIZE                 PIC S9(9) BINARY.
       01  ADDRSS                  PIC S9(9) BINARY.
       01  PGMPTR USAGE IS         PROCEDURE-POINTER.
       01  FEEDBACK.
           02  Condition-Token-Value.
           COPY  CEEIGZCT.
               03  Case-1-Condition-ID.
                   04  Severity    PIC S9(4) BINARY.
                   04  Msg-No      PIC S9(4) BINARY.
               03  Case-2-Condition-ID
                         REDEFINES Case-1-Condition-ID.
                   04  Class-Code  PIC S9(4) BINARY.
                   04  Cause-Code  PIC S9(4) BINARY.
               03  Case-Sev-Ctl    PIC X.
               03  Facility-ID     PIC XXX.
           02  I-S-Info            PIC S9(9) BINARY.
       01  COMPLETED               PIC X.
           88  RAN                 VALUE "Y".
           88  NOTRUN              VALUE "N".
       PROCEDURE DIVISION.
       0001-BEGIN-PROCESSING.
```

```
************************************************************
**  Register user condition handler CECNDHD using CEEHDLR. **
************************************************************
     SET PGMPTR TO ENTRY  "CECNDHD".
     MOVE 97 TO TOKEN
     CALL "CEEHDLR" USING PGMPTR TOKEN.
     MOVE 0 TO HEAPID.
************************************************************
**   Allocate large amount of heap storage.               **
************************************************************
     MOVE  500000 TO HPSIZE.
     CALL "CEEGTST" USING HEAPID, HPSIZE, ADDRSS, FEEDBACK.
     IF CEE000 OF FEEDBACK THEN
************************************************************
**       Call CESUBXP, which requires a large stack.      **
************************************************************
         SET NOTRUN TO TRUE
         CALL "CESUBXP" USING COMPLETED
************************************************************
*        Check whether CESUBXP completed, or failed with    *
*        storage condition.  If CESUBXP did not run,        *
*        resize the heap element down by a large amount     *
*        and call it again.                                 *
************************************************************
         IF NOTRUN THEN
             DISPLAY "Reduce storage acquired BY main program"
                     " AND CALL CESUBXP again."
             MOVE 300 TO NEWSIZE
             CALL "CEECZST" USING ADDRSS, NEWSIZE
             CALL "CESUBXP" USING COMPLETED
         END-IF
       ELSE
         DISPLAY "Call TO GET Storage Failed WITH MESSAGE "
             Msg-No OF FEEDBACK
     END-IF.

     GOBACK.
 END PROGRAM CECNDXP.
```

When any condition occurs in the main program, the user condition handler CECNDHD (see the following program) receives control and tests for the out-of-storage condition. If the out-of-storage condition has occurred, then CECNDHD calls CEEMRCR to return to the instruction in the main program after the subroutine call that produced the out-of-storage condition.

```
CBL LIB,QUOTE,NODYNAM
      *Module/File Name: IGZTOOSH
      ************************************************************
      *                                                          *
      * CECNDHD - Call CEEMRCR to move the resume cursor         *
      *           relative to the handle cursor.                 *
      *                                                          *
      * CECNDHD is a user condition handler that is registered   *
      * by the program CECNDXP.  CECNDHD gets control from the   *
      * condition manager and tests for the STORAGE CONDITION.   *
      * If a STORAGE CONDITION is detected, the resume cursor    *
      * is moved so that control is returned to the caller of    *
      * the routine encountering the STORAGE CONDITION.          *
      *                                                          *
      ************************************************************
       IDENTIFICATION DIVISION.
       PROGRAM-ID. CECNDHD.
       DATA DIVISION.
       WORKING-STORAGE SECTION.
       01  Movetyp                   PIC S9(9) BINARY.
       01  Feedback.
           02  Condition-Token-Value.
```

```
     COPY  CEEIGZCT.
         03  Case-1-Condition-ID.
             04  Severity    PIC S9(4) BINARY.
             04  Msg-No      PIC S9(4) BINARY.
         03  Case-2-Condition-ID
                   REDEFINES Case-1-Condition-ID.
             04  Class-Code  PIC S9(4) BINARY.
             04  Cause-Code  PIC S9(4) BINARY.
         03  Case-Sev-Ctl    PIC X.
         03  Facility-ID     PIC XXX.
     02  I-S-Info            PIC S9(9) BINARY.
 LINKAGE SECTION.
 01  Current-condition.
     02  Condition-Token-Value.
     COPY  CEEIGZCT.
         03  Case-1-Condition-ID.
             04  Severity    PIC S9(4) BINARY.
             04  Msg-No      PIC S9(4) BINARY.
         03  Case-2-Condition-ID
                   REDEFINES Case-1-Condition-ID.
             04  Class-Code  PIC S9(4) BINARY.
             04  Cause-Code  PIC S9(4) BINARY.
         03  Case-Sev-Ctl    PIC X.
         03  Facility-ID     PIC XXX.
     02  I-S-Info            PIC S9(9) BINARY.
**
 01  Token                   PIC X(4).
**
 01  Result-code             PIC S9(9) BINARY.
     88  resume              VALUE +10.
     88  percolate           VALUE +20.
     88  perc-sf             VALUE +21.
     88  promote             VALUE +30.
     88  promote-sf          VALUE +31.
 01  New-condition.
     02  Condition-Token-Value.
     COPY  CEEIGZCT.
         03  Case-1-Condition-ID.
             04  Severity    PIC S9(4) BINARY.
             04  Msg-No      PIC S9(4) BINARY.
         03  Case-2-Condition-ID
                   REDEFINES Case-1-Condition-ID.
             04  Class-Code  PIC S9(4) BINARY.
             04  Cause-Code  PIC S9(4) BINARY.
         03  Case-Sev-Ctl    PIC X.
         03  Facility-ID     PIC XXX.
     02  I-S-Info            PIC S9(9) BINARY.

 PROCEDURE DIVISION USING current-condition, token,
                          result-code, new-condition.
************************************************************
**  Determine if entry was for OUT OF STORAGE condition. **
************************************************************
     IF CEE0PD OF current-condition THEN
        DISPLAY "COBOL subroutine could NOT RUN because",
                " of the insufficient storage condition."
************************************************************
**      Call CEEMRCR to move the resume cursor           **
************************************************************
        MOVE 0 TO Movetyp
        CALL "CEEMRCR" USING Movetyp, Feedback
        IF CEE000 OF Feedback THEN
           SET resume TO TRUE
        ELSE
           SET promote TO TRUE
           MOVE feedback TO new-condition
        END-IF
```

```
           ELSE
              SET percolate TO TRUE
           END-IF

           GOBACK.
       END PROGRAM CECNDHD.
```

The following program is a COBOL subroutine that causes the out-of-storage condition.

```
CBL LIB,QUOTE,NODYNAM
      *Module/File Name: IGZTOOSS
      ************************************************************
      *                                                          *
      *   CESUBXP -                                              *
      *                                                          *
      *   When CESUBXP gets control, a request is made to        *
      *   Language Environment to allocate storage for the       *
      *   declared array W2.  An out-of-storage condition takes  *
      *   place, provided the caller has not allocated a large   *
      *   amount of storage.                                     *
      *                                                          *
      ************************************************************
       IDENTIFICATION DIVISION.

       PROGRAM-ID.    CESUBXP.

       DATA DIVISION.
       WORKING-STORAGE SECTION.
       01  ARRAY.
           05  W2                  PIC X OCCURS 3000000 TIMES.
       LINKAGE SECTION.
       01  PARM1                   PIC X.
           88  RAN-OK VALUE "Y".

       PROCEDURE DIVISION USING PARM1.
       PARA-CND01A.
           MOVE "B" TO W2(2999999).
           SET RAN-OK TO TRUE.

           GOBACK.
       End program CESUBXP.
```

PL/I examples using CEEHDLR, CEEGTST, CEECZST, and CEEMRCR

The following program calls CEEHDLR to register a user-written condition handler for the out-of-storage condition, calls CEEGTST to allocate heap storage, and calls CEECZST to alter the size of the heap storage requested.

```
*Process macro;
 /************************************************************/
 /*                                                          */
 /*  CECNDXP - Call the following Language Environment       */
 /*            services:                                     */
 /*      - CEEHDLR - Register user condition handler         */
 /*      - CEEGTST - Get heap storage                        */
 /*      - CEECZST - Change the size of heap element         */
 /*      - CEEHDLU - Unregister user condition handler       */
 /*                                                          */
 /*   1. A user condition handler CEENDHD is registered.     */
 /*   2. A large amount of HEAP storage is allocated.        */
 /*   3. A subroutine, Sub, is called which is known to      */
 /*      require a large amount of storage. It is not known  */
 /*      whether the storage for Sub is available during     */
 /*      this run of the application.                        */
 /*   4. If sufficient storage for Sub is not available,     */
 /*      a storage condition is generated.                   */
```

```
/*   5. CECNDHD gets control and sets resume at the       */
/*      next instruction following the call to Sub.       */
/*   6. A test for completion of Sub is made after        */
/*      the subroutine call. If Sub did not complete,     */
/*      a large amount of storage is freed, and Sub       */
/*      is invoked a second time.                         */
/*   7. Sub runs successfully once it has enough          */
/*      storage available.                                */
/*                                                        */
/*      Note: In order for this example to complete       */
/*      successfully, the FREE suboption of the HEAP      */
/*      runtime option must be in effect.                 */
/*                                                        */
/**********************************************************/
Cecndxp: proc options(main);

  /************************************************/
  /* Important elements are found in these includes */
  /* - feedback declaration                       */
  /* - fbcheck macro call                         */
  /* - condition tokens such as CEE000            */
  /* - entry declarations such as ceehdlr         */
  /************************************************/

  %include ceeibmct;
  %include ceeibmaw;

  dcl Cecndhd external entry;

  dcl 1 fback feedback;
  dcl token   fixed bin(31);
  dcl newsize fixed bin(31);
  dcl (heapid, hpsize) fixed bin(31);
  dcl addrss pointer;
  dcl ran char(1);
  /*******************************************/
  /* Register a user-written condition handler */
  /*******************************************/
  token = 97;
  Call ceehdlr(Cecndhd, token, fback);
  If fbcheck (fback, cee000) then
    display ('registered user handler');
  else
    display ('CEEHDLR failed with message number ' ||
              fback.MsgNo);

  /*******************************************/
  /* Allocate some HEAP storage, and then call */
  /* subroutine Sub. When Sub becomes active,  */
  /* an out-of-storage condition arises if     */
  /* the region is too small.                  */
  /*******************************************/

  heapid = 0;
  hpsize = 500000;
  call ceegtst (heapid, hpsize, addrss, fback);
  If fbcheck (fback, cee000) then ;
  else
    display ('CEEGTST failed with message number ' ||
                fback.MsgNo);
  ran = 'x';
  ran = sub();
  if ran ¬= 'r' then
    do;
      /*****************************************/
      /* If Sub did not run, reduce the size of  */
      /*  allocated storage and call Sub a 2nd   */
```

```
      /*  time.                                  */
      /*******************************************/
      newsize = 2000;
      call ceeczst (addrss, newsize, fback);
      If fbcheck (fback, cee000) then ;
      else
        display ('CEECZST failed with message number '
                 || fback.MsgNo);
      display ('Call subroutine for the 2nd time');
      ran = sub();
    end;
  /*********************************************/
  /* Unregister the user condition handler     */
  /*********************************************/

  Call ceehdlu (Cecndhd, fback);
  If fbcheck (fback, cee000) then ;
  else
    display ('CEEHDLU failed with message number ' ||
              fback.MsgNo);
  /*********************************************/
  /*  Internal subroutine Sub                  */
  /*********************************************/
  Sub: proc returns (char(1));
    dcl big(3000000) char(1);
    big(2999999) = 'B';
    return('r');
  end sub;

end Cecndxp;
```

When any condition occurs in CECNDXP, the user condition handler CECNDHD in the following program receives control and tests for the out-of-storage condition. If the out-of-storage condition has occurred, then CECNDHD calls CEEMRCR to return to the instruction in the main program after the subroutine call that produced the out-of-storage condition.

```
*Process macro;
 /*****************************************************/
 /*                                                   */
 /* Cecndhd - Call CEEMRCR to move the resume cursor */
 /*           relative to the handle cursor           */
 /*                                                   */
 /* Cecndhd is a user condition handler that is       */
 /* registered by the program Cecndxp. Cecndhd gets   */
 /* control from the condition manager and tests      */
 /* for the STORAGE condition. If a storage           */
 /* condition is detected, the resume cursor is       */
 /* moved so that control is returned to the caller   */
 /* of the routine encountering the STORAGE           */
 /* condition.                                        */
 /*                                                   */
 /*****************************************************/
 Cecndhd:  Proc (@condtok, @token, @result, @newcond)
           options(byvalue);

   %include ceeibmct;
   %include ceeibmaw;

   /* Parameters */
   dcl  @condtok    pointer;
   dcl  @token      pointer;
   dcl  @result     pointer;
   dcl  @newcond    pointer;

   dcl 1 condtok based(@condtok) feedback;
   dcl token  fixed bin(31) based(@token);
```

```
   dcl result fixed bin(31) based(@result);
   dcl 1 newcond based(@newcond) feedback;

   dcl 1 fback feedback;

   dcl move_type fixed bin(31);

   dcl resume     fixed bin(31) static initial(10);
   dcl percolate  fixed bin(31) static initial(20);
   dcl promote    fixed bin(31) static initial(30);
   dcl promote_sf fixed bin(31) static initial(31);

   /* Check if this is the out-of-storage token */

   if fbcheck (condtok, cee0pd) then
     do;
       display ('Sub not run: out of storage');

       /* Call CEEMRCR to move resume cursor    */
       move_type = 0;
       call ceemrcr (move_type, fback);
       If fbcheck (fback, cee000) then
         do;
           result = resume;
         end;
       else
         do;
           result = percolate;
         end;
     end;
   else     /* something besides out-of-storage */
     do;
       result = percolate;
     end;

 end Cecndhd;
```

Signaling and handling a condition in a C/C++ routine

The next program shows how a user-written condition handler gains control for a condition that was signaled using CEESGL, and calls CEEGQDT to access a data structure that was set up in the signaling routine. The CEEMRCR callable service resets the resume cursor, and execution resumes at the new point.

```
/*Module/File Name:  EDCSIGH */
/*********************************************************************/
/* This example shows how several of the Language Environment        */
/* condition management callable services are used.  The services    */
/* shown are:                                                        */
/* CEEHDLR  -- register a user condition handler                     */
/* CEESGL   -- signal a condition to the condition manager           */
/* CEEGQDT  -- get the q_data_token                                  */
/* CEEMRCR  -- move the resume cursor                                */
/*                                                                   */
/* The example also shows how to directly construct a condition token */
/* and provides a sample user condition handler.                     */
/*********************************************************************/
#include <stdio.h>
#include <string.h>
#include <stdlib.h>
#include <leawi.h>
#include <ceeedcct.h>

void b(void);

#ifdef __cplusplus
extern "C" {
```

```
#endif

void handler(_FEEDBACK *,_INT4 *,_INT4 *,_FEEDBACK *);

#ifdef __cplusplus
}
#endif

typedef struct {          /* condition info structure */
   int   error_value;
   char err_msg[80];
   int   retcode;
} info_struct;

int main(void) {

  printf("In main program\n");
   b();
  /* CEEMRCR should put the resume cursor at this point */
  printf("Finished\n");
}
void b(void) {

  _FEEDBACK fc,condtok;
  _ENTRY routine;
  _INT4 token,qdata;
  info_struct *info;
  _INT2 c_1,c_2,cond_case,sev,control;
  _CHAR3 facid;
  _INT4 isi;
  printf("In routine b\n");
  token = 99;
  routine.address = (_POINTER)&handler;
  routine.nesting = NULL;
  /* register the condition handler: */
  CEEHDLR(&routine,&token,&fc);

  if ( _FBCHECK ( fc , CEE000 ) != 0 ) {
     printf("CEEHDLR failed with message number %d\n",
            fc.tok_msgno);
     exit(2999);
  }

  /* build the condition token */
  c_1 = 1;
  c_2 = 99;
  cond_case = 1;
  sev = 1;
  control = 0;
  memcpy(facid,"ZZZ",3);
  isi = 0;

  CEENCOD(&c_1,&c_2,&cond_case,&sev,&control,
          facid,&isi,&condtok,&fc);
  if ( _FBCHECK ( fc , CEE000 ) != 0 ) {
     printf("CEENCOD failed with message number %d\n",
            fc.tok_msgno);
     exit(2999);
  }

  /* set up the condition info structure */
  info = (info_struct *)malloc(sizeof(info_struct));
  if (info == NULL) {
     printf("error allocating info_struct\n");
     exit(2399);
  }
  memset(info->err_msg,' ',79);
```

```
  info->err_msg[79] = '\0';
  info->error_value = 86;
  memcpy(info->err_msg,"Test message",12);
  info->retcode = 99;

  /* set qdata to be the condition info structure */
  qdata = (int)info;
  /* signal the condition */
  CEESGL(&condtok,&qdata,NULL);

  printf("Failed: handler should have moved resume cursor past this\n");
}
/*********************************************************************/
/* User condition handler                                            */
/*********************************************************************/
void handler(_FEEDBACK *fc, _INT4 *token, _INT4 *result,
             _FEEDBACK *newfc) {

   _FEEDBACK cursorfc, orig_fc;
   _INT4 type;
   _INT4 qdata;


   /* if the condition is not mine (ZZZ facid) then percolate */
   if (memcmp(fc->tok_facid,"ZZZ",3) != 0) {
      *result = 20;
      return;
   }
   printf("%d is handling the condition for Control\n",*token);

   /* get the q_data_token */
   CEEGQDT(fc,&qdata,NULL);

   /* look at the q_data_token and print out a message if the */
   /* error_value was 86                                      */
   if (((info_struct *)qdata)->error_value == 86)
      printf("%.80s\n",((info_struct*)qdata)->err_msg);

   /* move the resume cursor to the caller of the routine */
   /* that registered this handler                        */
   type = 1;
   CEEMRCR(&type,&cursorfc);
  if ( _FBCHECK ( cursorfc , CEE000 ) != 0 ) {
     printf("CEEMRCR failed with message number %d\n",
            cursorfc.tok_msgno);
     exit(2999);
  }

   /* mark the condition as handled and return */
   printf("Condition handled\n");
   *result = 10;
   return;
}
```

Handling a divide-by-zero condition in a COBOL program

The following routine illustrates how a COBOL program can handle a divide-by-zero condition if one occurs. occur. These actions occur:

1. The program enables the divide-by-zero exception. Exceptions can be enabled or disabled by calling the CEE3SPM (Query and Modify Language Environment Hardware Condition Enablement) callable service.
2. The program registers a user-written condition handler that recognizes the divide-by-zero condition.

3. The program then performs a divide-by-zero, which causes the user-written condition handler to get control.
4. The handler calls CEE3GRN (Get Name of Routine that Incurred Condition), to return the name of the routine that the condition occurred in.
5. The handler inserts the routine name and condition token into a user-defined message string, and calls CEEMOUT (Dispatch a Message) to send the message to the Language Environment message file.

   (The Language Environment message file is a file that you can specify to store messages from a given routine or application, or from all routines that run under Language Environment.)
6. The program uses CEEHDLR to register the user-written condition handler.

```
 CBL LIB,QUOTE,NODYNAM
*Module/File Name: IGZTSIGR
************************************************
**                                            *
** IGZTSIGR -  Call the following Language     *
**             Environment services:          *
**                                            *
**    : CEEHDLR - register user condition      *
**                handler                     *
**    : CEE3GRN - get name of routine that     *
**                incurred the condition.     *
**    : CEEMOUT - output message associated    *
**                with the condition, including *
**                the name of the routine that  *
**                incurred the condition.     *
**                                            *
**  1. Our example registers user condition    *
**     handler IGZTSIGH.                      *
**  2. Our program then divides by zero, which  *
**     causes a hardware exception condition.  *
**  3. IGZTSIGH gets control and prints out a  *
**     message that includes the name of the   *
**     routine that incurred the divide-by-zero *
**     condition, IGZTSIGR.                   *
**  4. IGZTSIGH requests that Condition        *
**     management resume execution after the   *
**     point at which the condition occurred.  *
**  5. IGZTSIGR terminates normally.           *
**                                            *
************************************************

 IDENTIFICATION DIVISION.
 PROGRAM-ID.    IGZTSIGR.

 DATA DIVISION.
 WORKING-STORAGE SECTION.
 01  DIVISOR         PIC S9(9) BINARY.
 01  QUOTIENT        PIC S9(9) BINARY.
**
**  Declares for condition handling
**
 01   PGMPTR     USAGE IS PROCEDURE-POINTER.
 01   FBCODE.
     02  Condition-Token-Value.
     COPY  CEEIGZCT.
         03  Case-1-Condition-ID.
             04  Severity    PIC S9(4) BINARY.
             04  Msg-No      PIC S9(4) BINARY.
         03  Case-2-Condition-ID
                 REDEFINES Case-1-Condition-ID.
             04  Class-Code  PIC S9(4) BINARY.
             04  Cause-Code  PIC S9(4) BINARY.
```

```
           03  Case-Sev-Ctl    PIC X.
           03  Facility-ID     PIC XXX.
       02  I-S-Info            PIC S9(9) BINARY.
 77   TOKEN      PIC X(4).       PROCEDURE DIVISION.
 0001-BEGIN-PROCESSING.
     DISPLAY "*********************************".
     DISPLAY "IGZTSIGR COBOL Example is        ".
     DISPLAY "         now in motion.          ".
     DISPLAY "*********************************".
** ********************************************
**  Register user condition handler IGZTSIGH   **
**           using CEEHDLR                     **
** ********************************************
     SET PGMPTR TO ENTRY "IGZTSIGH".
     MOVE 97 TO TOKEN.
     CALL "CEEHDLR" USING PGMPTR, TOKEN, FBCODE.
     IF ( NOT CEE000 of FBCODE ) THEN
         DISPLAY "Error " Msg-No of FBCODE
            " registering condition handler "
            " IGZTSIGH" UPON CONSOLE
         STOP RUN
     END-IF.
***************************************************
** Divide by zero to cause a hardware exception**
** condition.  Condition handler IGZTSIGH gets **
** control and CALLs CEE3GRN to obtain the     **
** name of the routine in which the condition  **
** was raised.                                 **
** IGZTSIGH then prints a message using CEEMOUT**
** and passing the name "LEASMSIG."  Control   **
** returns and normal termination takes place. **
** ********************************************
     MOVE 0 TO DIVISOR.
     DIVIDE  5 BY DIVISOR GIVING QUOTIENT.
     DISPLAY "*********************************".
     DISPLAY "IGZTSIGR COBOL Example has ended.".
     DISPLAY "*********************************".
     GOBACK.
 End program IGZTSIGR .
CBL LIB,QUOTE,NODYNAM
***************************************************
**                                               **
** IGZTSIGH - Call the following Language        **
**            Environment services:              **
**                                               **
**    : CEE3GRN - Get name of routine that       **
**                incurred a condition.          **
**    : CEEMOUT - output a user message          **
**                                               **
**  This is the user condition handler           **
**  registered by IGZTSIGR.  It calls CEE3GRN    **
**  to retrieve the name of the routine that     **
**  incurred the divide-by-zero condition. It    **
**  then calls CEEMOUT to output the message.    **
**                                               **
***************************************************
 IDENTIFICATION DIVISION.
 PROGRAM-ID. IGZTSIGH.
 DATA DIVISION.
 WORKING-STORAGE SECTION.
 01  msgstr.
     02  VarStr-length       PIC S9(4) BINARY.
     02  VarStr-text.
         03  VarStr-char         PIC X,
                     OCCURS 0 TO 256 TIMES
                     DEPENDING ON VarStr-length
                        OF msgstr.       01  Feedback.
```

```
     02  Condition-Token-Value.
     COPY  CEEIGZCT.
         03  Case-1-Condition-ID.
             04  Severity    PIC S9(4) BINARY.
             04  Msg-No      PIC S9(4) BINARY.
         03  Case-2-Condition-ID
                   REDEFINES Case-1-Condition-ID.
             04  Class-Code  PIC S9(4) BINARY.
             04  Cause-Code  PIC S9(4) BINARY.
         03  Case-Sev-Ctl    PIC X.
         03  Facility-ID     PIC XXX.
     02  I-S-Info            PIC S9(9) BINARY.
 77  rtn-name        PIC X(80).
 77  msgdest         PIC S9(9) BINARY.
 77  string-pointer  PIC S9(4) BINARY.
*
 LINKAGE SECTION.
 01  Current-condition.
     02  Condition-Token-Value.
     COPY  CEEIGZCT.
         03  Case-1-Condition-ID.
             04  Severity    PIC S9(4) BINARY.
             04  Msg-No      PIC S9(4) BINARY.
         03  Case-2-Condition-ID
                   REDEFINES Case-1-Condition-ID.
             04  Class-Code  PIC S9(4) BINARY.
             04  Cause-Code  PIC S9(4) BINARY.
         03  Case-Sev-Ctl    PIC X.
         03  Facility-ID     PIC XXX.
     02  I-S-Info            PIC S9(9) BINARY.
**
 01  Token           PIC X(4).
**
 01  Result-code     PIC S9(9) BINARY.
     88 resume           VALUE +10.
     88 percolate        VALUE +20.
     88 perc-sf          VALUE +21.
     88 promote          VALUE +30.
     88 promote-sf       VALUE +31.
 01  New-condition.
     02  Condition-Token-Value.
     COPY  CEEIGZCT.
         03  Case-1-Condition-ID.
             04  Severity    PIC S9(4) BINARY.
             04  Msg-No      PIC S9(4) BINARY.
         03  Case-2-Condition-ID
                   REDEFINES Case-1-Condition-ID.
             04  Class-Code  PIC S9(4) BINARY.
             04  Cause-Code  PIC S9(4) BINARY.
         03  Case-Sev-Ctl    PIC X.
         03  Facility-ID     PIC XXX.
     02  I-S-Info            PIC S9(9) BINARY.
 PROCEDURE DIVISION USING current-condition,
                          token, result-code,
                          new-condition.
************************************************
*    Check to see whether this routine was     *
*    entered due to a divide-by-zero exception, *
*    or due to some other condition.           *
************************************************
     IF CEE349 OF current-condition THEN
************************************************
*      (A divide-by-zero condition has occurred)*
************************************************
         SET resume TO TRUE
************************************************
**   Call CEE3GRN to retrieve the name of the  **
```

```
**   program that incurred the divide-by-zero  **
**   exception. Build user message and include **
**   the name of the program.                  **
************************************************
        CALL "CEE3GRN" USING rtn-name, feedback
        IF ( NOT CEE000 OF feedback ) THEN
            DISPLAY "Error " Msg-No OF feedback
                " in obtaining program name."
                UPON CONSOLE
            MOVE feedback TO new-condition
            SET promote TO TRUE
        ELSE
            MOVE 1 TO string-pointer
            MOVE 255 TO VarStr-length OF msgstr
            STRING "The example program "
                   rtn-name
                   " incurred a divide-by-zero"
                   " exception."
                DELIMITED BY "  "
                INTO VarStr-text OF msgstr
                POINTER string-pointer
            SUBTRACT 1 FROM string-pointer,
                GIVING VarStr-length OF msgstr
            MOVE 2 TO msgdest
************************************************
**     Call CEEMOUT to output the user message.**
************************************************
            CALL "CEEMOUT" USING msgstr,msgdest,
                                 feedback
            IF ( NOT CEE000 OF feedback ) THEN
                DISPLAY "Error in writing the "
                        "message string."
                MOVE feedback TO new-condition
                SET promote TO TRUE
            END-IF
        END-IF
    ELSE
************************************************
*        (A condition other than               **
*         divide-by-zero has occurred)         **
************************************************
        SET percolate TO TRUE
    END-IF

    GOBACK.

 END PROGRAM IGZTSIGH.
```

Handling a program check in an assembler routine

The following routine illustrates how an assembler routine can handle a program check if one should occur. The following occurs:

1. The routine registers a user-written condition handler, LEASMHD3, that responds to a program check by calling CEE3DMP to request a dump.
2. The routine then calls a subroutine, LEASMHD2, that generates a program check.
3. The routine gives control to the user-written condition handler.

Note that a condition handler to which an assembler routine gives control does not have to be link-edited into the same load module as the routine; a condition handler can be dynamically loaded and can possibly dynamically load other modules also.

```
SMP1     TITLE 'Sample of main program that registers a handler'
*
*        Symbolic Register Definitions and Usage
*
R0       EQU   0             Parameter list address (CMS only)
R1       EQU   1             Parameter list address, 0 if no parms
R10      EQU   10            Base register for executable code
R12      EQU   12            Language Environment Common Anchor Area
*                                 address
R13      EQU   13            Save Area/Dynamic Storage Area address
R14      EQU   14            Return point address
R15      EQU   15            Entry point address
*
*        Prologue
*
CEEHDRA  CEEENTRY AUTO=DSASIZ,    Amount of main memory to obtain
               MAIN=YES,          This routine is a MAIN program
               PPA=PPA1,          Program Prolog Area for this routine
               BASE=R10           Base register for executable code
*                                      constants, and static variables
         USING CEECAA,R12         Common Anchor Area addressability
         USING CEEDSA,R13         Dynamic Storage Area addressability
*
*        Announce ourselves
*
         WTO   'CEEHDRA Says "HELLO"',ROUTCDE=11
*
*        Register User Handler
*
         LA    R1,USRHDLPP        Get addr of proc-ptr to Handler rtn
         ST    R1,PARM1           Make it 1st parameter
         LA    R1,TOKEN           Get addr of 32-bit token
         ST    R1,PARM2           Make it 2nd parameter
         LA    R1,0               Omit address for Feedback Code:
*                                      If an error occurs while
*                                      registering the handler,
*                                      Language Environment signals
*                                      the condition, rather than
*                                      passing it back to caller
         ST    R1,PARM3           Make it 3rd parameter
         LA    R1,HDLRPLST        Point to parameter list for CEEHDLR
         CALL  CEEHDLR            Invoke CEEHDLR callable service AWI
*
*        Call subroutine to cause an exception
*
         CALL  LEASMHD2
*
*        Un-Register User Handler
*
         LA    R1,USRHDLPP        Get addr of proc-ptr to Handler rtn
         ST    R1,HDLUPRM1        Make it 1st parameter
         LA    R1,FEEDBACK        Address for Feedback Code
         ST    R1,HDLUPRM2        Make it 2nd parameter
         LA    R1,HDLUPLST        Point to parameter list for CEEHDLU
         CALL  CEEHDLU            Invoke CEEHDLU callable service AWI*
*        Bid fond farewell
*
         WTO   'CEEHDRA Says "GOOD-BYE"',ROUTCDE=11
*
*        Epilogue
*
         CEETERM RC=4,MODIFIER=1  Terminate program
*
*        Program Constants and Local Static Variables
*
USRHDLPP DC    V(LEASMHD3),A(0)   Procedure-pointer to Handler routine
*
```

```
         LTORG ,                  Place literal pool here
         SPACE 3
PPA1     CEEPPA ,                 Program Prolog Area for this routine
         EJECT
*
*        Map the Dynamic Storage  Area (DSA)
*
         CEEDSA ,            Map standard CEE DSA prologue
*
*        Local Automatic (Dynamic) Storage..
*
HDLRPLST DS    0F            Parameter List for CEEHDLR
PARM1    DS    A             Address of User-written Handler
PARM2    DS    A             Address of 32-bit Token
PARM3    DS    A             Address of Feedback Code cond token
*
HDLUPLST DS    0F            Parameter List for CEEHDLR
HDLUPRM1 DS    A             Address of User-written Handler
HDLUPRM2 DS    A             Address of Feedback Code cond token
*
TOKEN    DS    F             32-bit Token:  fullword whose *value* will
*                                 be passed to the user handler each
*                                 time it is called.
*
FEEDBACK DS    CL12          Feedback Code condition token
*
DSASIZ   EQU   *-CEEDSA      Length of DSA
         EJECT
*
*        Map the Common Anchor Area (CAA)
*
         CEECAA
         END   CEEHDRA
HDR2     TITLE 'Sample of subprogram that forces a program check'
*
*        Symbolic Register Definitions and Usage
*
R1       EQU   1             Parameter list address, 0 if no parms
R11      EQU   11            Base register for executable code
R12      EQU   12            Language Environment Common Anchor Area
*                                 address
R13      EQU   13            Save Area/Dynamic Storage Area address
R14      EQU   14            Return point address
R15      EQU   15            Entry point address*
*        Prologue
*
LEASMHD2 CEEENTRY AUTO=DSASIZ,    Amount of main memory to obtain      *
               PPA=PPA2,          Program Prolog Area for this routine *
               MAIN=NO,           This program is a Subroutine         *
               NAB=YES,           YES because called by enabled rtn    *
               BASE=R11           Base register for executable code,
*                                      constants, and static variables
         USING CEECAA,R12         Common Anchor Area addressability
         USING CEEDSA,R13         Dynamic Storage Area addressability
*
*        Announce ourselves
*         WTO   'LEASMHD2 Says "HELLO"',ROUTCDE=11
*
*        Cause Data Exception (Language Environment condition 3207)
*
         XC    A,A                Clear to Binary Zeros
*                                      (not a valid packed number)
         AP    A,=P'7'            Cause Data exception
*
*        Say good-bye
*
         WTO   'LEASMHD2 Says "GOOD-BYE"',ROUTCDE=11
```

```
*
*        Epilogue
*
         CEETERM RC=0             Terminate program
         SPACE 3
*
*        Program Constants and Local Static Variables
*
PPA2     CEEPPA ,                 Program Prolog Area for this routine
*
         LTORG ,                  Place literal pool here
         EJECT
*
*        Map the Dynamic Storage  Area (CAA)
*
         CEEDSA ,            Map standard CEE DSA prologue
*
*        Local Automatic (Dynamic) Storage..
*
A        DS    PL2           Packed operand (uninitialized)
*
DSASIZ   EQU   *-CEEDSA      Length of DSA
         EJECT
*
*        Map the Common Anchor Area (CAA)
*
         CEECAA
         END   ,                  of LEASMHD2
SMP3     TITLE 'User-written condition handler'*
*        Symbolic Register Definitions and Usage
*
R1       EQU   1             Parameter list address (upon entry)
R2       EQU   2             Work register
R3       EQU   3             Parameter list address (after CEEENTRY)
R4       EQU   4             Will point to Result Code Argument
R10      EQU   10            Will point to Condition Token Argument
R11      EQU   11            Base register for executable code
R12      EQU   12            Common Anchor Area address
R13      EQU   13            Save Area/Dynamic Storage Area address
R14      EQU   14            Return point address
R15      EQU   15            Entry point address
*
*        Prologue
*
LEASMHD3 CEEENTRY AUTO=DSASIZ,    Amount of main memory to obtain      *
               PPA=PPA3,          Program Prolog Area for this routine *
               MAIN=NO,           This program is a Subroutine         *
               NAB=YES,           YES--called under Language Env.      *
               PARMREG=R3,        R1 value is saved here               *
               BASE=R11           Base register for executable code,
*                                      constants, and static variables
         USING CEECAA,R12         Common Anchor Area addressability
         USING CEEDSA,R13         Dynamic Storage Area addressability
         USING UHDLARGS,R3        User Handler Args addressability
*
*        Locate Arguments
*
         L     R10,@CURCOND       Get address of Condition Token
         USING $CURCOND,R10       Condition Token addressability
         L     R4,@RESCODE        Get address of Result Code
         USING $RESCODE,R4        Result Code addressability
*
*        Announce ourselves
*
         WTO   'LEASMHD3 Says "HELLO"',ROUTCDE=11
*
*        Process Condition
```

```
*
         CLC   CURCOND(8),CEE347  Was this handler entered due to the
*                                      condition it was created to
*                                      deal with (data exception) ?
         BE    BADPDATA           Yes -- go process it
*                                 No..
         MVC   RESCODE,=A(PERCOLAT)    Indicate PERCOLATE action
         B     OUT                Return to Language Environment
*                                      condition manager
*
BADPDATA EQU   *                  Processing for data exception:
         MVC   RESCODE,=A(RESUME) Indicate RESUME action*
*        Call CEE3DMP to Dump machine state
*
         LA    R1,DUMPTITL        Get address of Dump Title
         ST    R1,PARM1           Make it first parameter
         LA    R1,DUMPOPTS        Get address of Dump Options string
         ST    R1,PARM2           Make it second parameter
         LA    R1,FC              Address of Feedback Code
         ST    R1,PARM3           Make it third parameter
         LA    R1,DMPPARMS        Point to parameter list for CEE3DMP
         CALL  CEE3DMP            Invoke CEE3DMP callable service AWI
*
*        Sign-off
*
OUT      EQU   *
         WTO   'LEASMHD3 Says "GOOD-BYE"',ROUTCDE=11
*
*        Epilogue
*
         CEETERM RC=0
*
*        Program Constants and Local Static Variables
*
DUMPOPTS DC    CL256'THR(ALL) BLOCK STORAGE'     Dump Options
*
DUMPTITL DC    CL80'LEASMHD3 - Sample Dump '     Dump Title
*
PPA3     CEEPPA ,                 Program Prolog Area for this routine
*
         LTORG ,                  Place literal pool here
*
*        Define Symbolic Value Constants for Condition Tokens
*
         CEEBALCT
         EJECT
*
*        Map Arguments to User-Written Condition Handler
*
UHDLARGS DSECT
@CURCOND DS    A             Address of CIB
@TOKEN   DS    A             Address of 32-bit token value from CEEHDLR
@RESCODE DS    A             Address of Result Code
@NEWCOND DS    A             Address of New Condition
         SPACE 3
$CURCOND DSECT ,             Mapping of the current condition
CURCOND  DS    A             Condition token that identifies the
*                                    current condition being processed
         SPACE 3
$TOKEN   DSECT ,             Mapping of the 32-bit Token Argument
TOKEN    DS    A             Value of 32-bit Token from CEEHDLR call
SPACE 3
$RESCODE DSECT ,             Mapping of Result Code Argument
RESCODE  DS    F             Result Code specifies the action for
*                            the condition manager to take when
*                            control returns from the user handler:
RESUME   EQU   10            Resume at the resume cursor
```

```
*                           (condition has been handled)
PERCOLAT EQU   20           Percolate to the next condition handler
*                           (if a Result Code is not explicitly set
*                            by the handler, this is the default)
PROMOTE  EQU   30           Promote to the next condition handler
*                           (New Condition has been set)
* (See the Language Environment Programming Guide for other result
*      code values.)
         SPACE 3
$NEWCOND DSECT ,            Mapping of the New Condition Argument
NEWCOND  DS    CL12         New Condition (condition token) specifies
*                                the condition promoted to.
         EJECT
*
*        Map the Dynamic Storage  Area (DSA)
*
         CEEDSA ,           Map standard CEE DSA prologue
*
*        Local Automatic (Dynamic) Storage..
*
DMPPARMS DS 0F              Parameter list for CEE3DMP
PARM1    DS    A            Address of Title string
PARM2    DS    A            Address of Options string
PARM3    DS    A            Address of Feedback Code
*
FC       DS    CL12         Feedback Code condition token
*
DSASIZ   EQU   *-CEEDSA     Length of DSA
         EJECT
*
*        Map the Common Anchor Area (CAA)
*
         CEECAA
         END   ,                of LEASMHD3
```

Chapter 18. Using condition tokens

Language Environment uses the 12-byte condition token data type to perform a variety of communication functions. This topic describes the format of the condition token and its components, and how you can use the condition token to react to conditions and communicate conditions with other routines.

The basics of using condition tokens

If you provide an *fc* parameter in a call to a Language Environment callable service, the service sets *fc* to a specific value called a condition token and returns it to your application. (See "The effect of coding the fc parameter" on page 272 for more information.)

If you do not specify the *fc* parameter in a call to a Language Environment service, Language Environment generates a condition token for any nonzero condition and signals it using the CEESGL callable service. Signaling the condition token causes it to be passed it to Language Environment condition handling. (See "Effects of omitting the fc parameter" on page 273 for more information.)

The condition token is used by the routines of your application to communicate with message services, the condition manager, and other routines within the application. For example, you can use it with Language Environment message services to write a diagnostic message associated with a particular condition to a file. You can also determine if a particular condition has occurred by testing the condition token, or a symbolic representation of it. See "User-written condition handler interface" on page 236 for more information about coding user-written condition handlers. The structure of the condition token is described in "Understanding the structure of the condition token" on page 274, and symbolic feedback codes are discussed in "Using symbolic feedback codes" on page 275.

Language Environment condition tokens contain a 4-byte Instance Specific Information (ISI) token. The ISI token can contain (depending on whether a condition occurred) insert data that further describes the condition and that can be used, for example, to write a specific message to a file. In addition to insert data, the ISI can contain qualifying data (q_data) that user-written condition handlers use to identify and react to a specific condition.

Language Environment provides callable services to help you construct and decompose your own condition tokens.

CEEDCOD
: Breaks down a condition token into its component parts.

CEENCOD
: Creates a new condition token in your application.

See *z/OS Language Environment Programming Reference* for a detailed explanation of each field in a condition token and for more information about using CEEDCOD and CEENCOD callable services. See also the message handling services listed in Chapter 19, "Using and handling messages," on page 295.

© Copyright IBM Corp. 1991, 2015

The effect of coding the fc parameter

The feedback code is the last parameter of all Language Environment callable services, and the second to last parameter of all Language Environment math services. COBOL/370 programs must provide the feedback code parameter in each call to a Language Environment callable service; C, C++, Enterprise COBOL for z/OS, COBOL for OS/390 & VM, COBOL for MVS & VM, and PL/I routines do not have to do so. (See *z/OS Language Environment Programming Reference* for information about how to provide the feedback code parameter in each HLL.) When the *fc* parameter is provided and a condition is raised, the following sequence of events occurs:

1. The callable service in which the condition occurred builds a condition token for the condition. The condition token is a 12-byte representation of a Language Environment condition. Each condition is associated with a single Language Environment runtime message.
2. The callable service places information into the ISI, which might contain the following:
   - A timestamp
   - Information that is inserted into a message associated with the condition

     For example, you can use the CEEBLDTX utility (see "Creating messages" on page 296) or the CEECMI callable service (see *z/OS Language Environment Programming Reference*) to generate message inserts. Routines signaling a new condition with a call to CEESGL should first call CEECMI to copy any insert information into the ISI associated with the condition.
3. If the severity of the detected condition is critical (severity = 4), it is raised directly to the condition manager. Language Environment then processes the condition, as described in "Condition step" on page 199.
4. If the condition severity is not critical (severity less than 4), the condition token is returned to the routine that called the service.
5. When the condition token is returned to your application, you can use the condition token in the following ways:
   - Ignore it and continue processing.
   - Signal it to Language Environment using the CEESGL callable service.
   - Get, format, and dispatch the message for display using the CEEMSG callable service.
   - Store the message in a storage area using the CEEMGET callable service.
   - Use the CEEMOUT callable service to dispatch a user-defined message string to a destination that you specify.
   - Compare the condition token to one that is known to you so that you can react appropriately. You can test the condition token for success, equivalence or equality.

   See *z/OS Language Environment Programming Reference* for more information about Language Environment callable services.

Testing a condition token for success

To test a condition token for success, it is sufficient to determine if the first 4 bytes are zero; if the first 4 bytes are zero, the remainder of the condition token is zero, indicating that a successful call was made to the service.

The Language Environment condition handling model provides two ways you can check for success using the *fc* parameter. You can compare the value returned in *fc*

to the symbolic feedback code CEE000, or you can compare it to a 12-byte condition token containing all zeroes coded in your routine. See "Using symbolic feedback codes" on page 275 for details.

You do not necessarily need to check the feedback code after every invocation of a service or to check for success before proceeding with execution. However, if you want to ensure that your application is invoking callable services successfully, test the feedback code after each call to a service.

Testing condition tokens for equivalence

Two condition tokens are equivalent if they represent the same type of condition, even if not necessarily the same instance of the condition. For example, you could have two occurrences of an out-of-storage condition. Though equivalent conditions, they are not necessarily equal because they occur in different locations in your program.

To determine whether two condition tokens are equivalent, compare the first 8 bytes of each condition token to one another. These bytes are static and do not change depending on the given instance of the condition.

You might want to check for equivalence when writing a message about a type of condition that occurs in your application or when registering a condition handling routine to respond to a given type of condition.

There are two ways to check for equivalent condition tokens:

- You can break down the condition token by coding it as a structure and looking at its individual components, or you can call the CEEDCOD (decompose condition token) service to break down the condition token. See *z/OS Language Environment Programming Reference* for more information about the CEEDCOD service.
- The easiest way to test for equivalence is to compare the value returned in *fc* with the symbolic feedback code for the condition you are interested in handling. Symbolic feedback codes represent only the first 8 bytes of a 12-byte condition token. See "Using symbolic feedback codes" on page 275 for details.

Testing condition tokens for equality

To determine whether two condition tokens are equal (that is, the same instance or occurrence of the condition token), you must compare all 12 bytes of each condition token with each other. The last 4 bytes can change from instance to instance of a given condition.

The only way to test condition tokens for equality is to compare the value returned in *fc* with another condition token that has either been returned from a call to a service, or that you have coded as a 12-byte condition token in your routine. Symbolic feedback codes are used to test for equivalence; they are not useful in testing for equality because they represent only the first 8 bytes of the condition token.

Effects of omitting the fc parameter

When a feedback code is not provided, any nonzero condition is raised. Signaled conditions are processed by Language Environment, as described in "Condition step" on page 199. If the condition remains unhandled at the end of processing, Language Environment takes the Language Environment default action (defined in

Table 34 on page 201). The message delivered is the translation of the condition token into English (or another supported national language).

Understanding the structure of the condition token

Figure 74 illustrates the structure of the condition token, with bit offsets shown above the components:

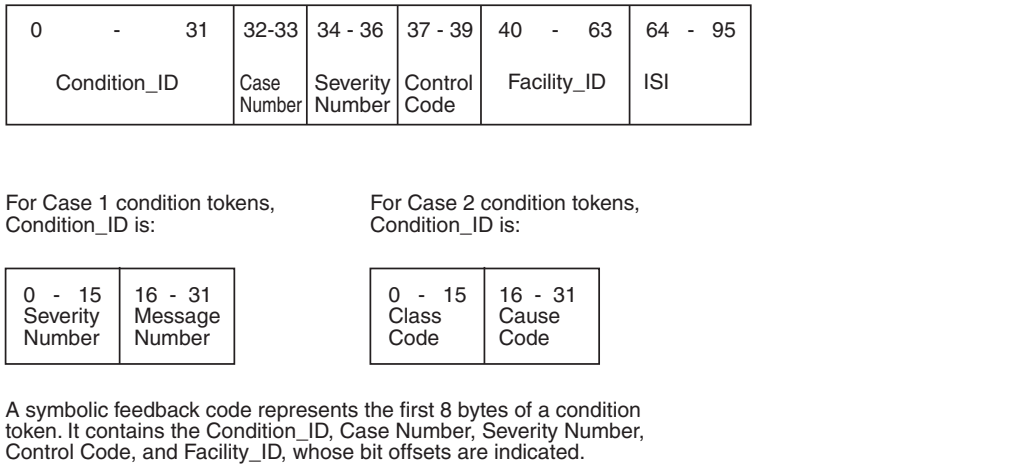

Figure 74. Language Environment condition token

Every condition token contains the components indicated in Figure 74.

Condition_ID
A 4-byte identifier that, with the facility ID, describes the condition that the token communicates. The format of Condition_ID depends on whether a Case 1 (service condition) or Case 2 (class/cause code) condition is being represented. Language Environment callable services and most applications can produce Case 1 conditions. Case 2 conditions could be produced by some operating systems and compiler libraries. Language Environment does not produce them directly.

Figure 74 illustrates the format of the Condition_ID for Case 1 and Case 2 conditions.

Case Specifies if the condition token is for a Case 1 or Case 2 condition.

Severity
Specifies the severity of the condition represented by the condition token.

Control
Specifies if the facility ID has been assigned by IBM.

Facility ID
A 3-character alphanumeric string that identifies the product or component of a product that generated the condition; for Language Environment, the facility ID is CEE. Although all Language Environment-conforming HLLs use Language Environment message and condition handling services, the actual runtime messages generated under Language Environment still carry the language identification in the facility ID. The facility ID for PL/I, for example, is IBM.

When paired with a message number, a facility ID uniquely identifies a message in the message source file. The facility ID and message number

persist throughout an application. This allows the meaning of the condition and its associated message to be determined at any point in the application after a condition has occurred.

If you are creating a new facility ID to use with your own message source file, follow the guidelines listed under the *Facility_ID* parameter of CEENCOD in *z/OS Language Environment Programming Reference*.

If you create a new facility_ID to use with a message source file you created using CEEBLDTX (see "Creating messages" on page 296), be aware that the facility ID must be part of the message source file name. Therefore, you must follow the naming guidelines to ensure the module name does not abend.

ISI A 4-byte Instance Specific Information token associated with a given instance of the condition. A nonzero ISI token provides instance specific information. The ISI token contains data on message inserts for the message associated with the condition and a q_data_token containing 4 bytes of qualifying data. The ISI token is typically built by Language Environment for system or Language Environment-signaled conditions. It can also be built by an application for conditions signaled using CEESGL. The CEECMI callable service can be used to define the message inserts within the ISI for a condition token. The q_data to be placed in the ISI for a condition token is defined by signaling the condition using CEESGL.

You can extract ISI information inside of CEEHDLR-established condition handlers. The message insert information cannot be retrieved directly; however, the entire formatted message with inserts can be formatted and placed in an application-provided character string using CEEMGET. The q_data_token can be retrieved using CEEGQDT.

Using symbolic feedback codes

Language Environment provides symbolic feedback codes representing the first 8 bytes of a 12-byte condition token. Using Language Environment symbolic feedback codes saves you from having to define an 8-byte condition token in your code whenever you want to check for the occurrence of a condition. Symbolic feedback codes are limited to testing for conditions rather than actual condition instances: no ISI information is tested using symbolic feedback codes because the comparison is only performed against the first 8 bytes of the condition token.

Language Environment provides include files (copy files) that define all Language Environment symbolic feedback codes. See "Including symbolic feedback code files" on page 276 for information about Language Environment symbolic feedback code files.

Locating symbolic feedback codes for conditions

In Language Environment you can locate symbolic feedback codes in the following ways:

- Look in the first column of the symbolic feedback codes table listed after each of the callable services in *z/OS Language Environment Programming Reference*. The symbolic feedback code table for the CEEGTST (get heap storage) callable service is shown in Table 42 on page 276.

Table 42. Symbolic feedback codes associated with CEEGTST

Symbolic feedback code	Severity	Message number	Message text
CEE000	0	—	The service completed successfully.
CEE0P2	4	0802	Heap storage control information was damaged.
CEE0P3	3	0803	The heap identifier in a get storage request or a d iscard heap request was unrecognized.
CEE0P8	3	0808	Storage size in a get storage request or a realloca te request was not a positive number.
CEE0PD	3	0813	Insufficient storage was available to satisfy a get storage request.

To test for the condition raised when you specify an invalid heap ID from which to get storage, you can compare the symbolic feedback code CEE0P3 to the condition token returned either from the service or from the Language Environment condition manager (depending on whether you specified *fc* in the call to CEEGTST).

- If you want to code a condition handling routine to handle a condition resulting in an error message from your application, see *z/OS Language Environment Runtime Messages*, which lists error messages and the symbolic feedback code for conditions.

Including symbolic feedback code files

Symbolic feedback codes are provided for Language Environment, C or C++, COBOL, Fortran, and PL/I conditions. The symbolic feedback code files are stored in the SCEESAMP sample library. To use symbolic feedback codes, you must include the symbolic feedback code files in your source code. The symbolic feedback code files have file names of the form *xxxyyy*CT, where:

xxx
Indicates the facility ID of the conditions represented in the file. For example, EDC*yyy*CT contains condition tokens for C- or C++-specific conditions (those with the facility ID of EDC).

xxx can be CEE (Language Environment), EDC (C or C++), FOR (Fortran), IBM (PL/I), or IGZ (COBOL).

yyy
Indicates the facility ID of the language in which the declarations are coded. For example, EDCIBMCT contains PL/I declarations of C condition tokens. *yyy* can be BAL (assembler), EDC (C or C++), FOR (Fortran), IBM (PL/I), or IGZ (COBOL).

CT Stands for "condition token."

To use symbolic feedback codes, include the file in your source code using the appropriate language construct, for example:

- In C or C++, to include the file of C or C++ declarations for IGZ (COBOL) condition tokens, specify:

```
#include <igzedcct>
```

- In COBOL, define SCEESAMP and use the COPY statement to include the file, as shown below.

Define SCEESAMP in your SYSLIB statement:

```
//SYSLIB DD DSNAME=CEE.SCEESAMP,DISP=SHR
```

Specify the following in your COBOL code to include the files containing Language Environment and COBOL condition tokens declared in COBOL:

```
⋮
       COPY CEEIGZCT.
       COPY IGZIGZCT.
⋮
```

- In Fortran, to include the Fortran declarations for FOR (Fortran) and CEE (Language Environment) condition tokens. specify the following.

```
INCLUDE (FORFORCT)
INCLUDE (CEEFORCT)
```

- In PL/I, to include the PL/I declarations for IBM (PL/I) and CEE (Language Environment) condition tokens, specify:

```
 %INCLUDE IBMIBMCT
 %INCLUDE CEEIBMCT
```

Examples using symbolic feedback codes

The following examples use symbolic feedback codes to test user input and display a message if the input is incorrect.

C and C++

In the following example, the symbolic feedback code file CEEEDCCT is included and a call is made to CEEGTST. After the call, a test is made for the condition token representing an invalid heap ID. The *fc* returned from CEEGTST is tested against the symbolic feedback code CEE0P3 listed in the CEEGTST feedback code table (see *z/OS Language Environment Programming Reference*). If the heap ID specified is not valid, another call is made to CEEGTST to try again.

_FBCHECK (IBM-supplied) is used to compare only the first 8 bytes of the *fc* against the symbolic feedback code.

```
/*Module/File Name:  EDCSFC   */

#include <stdio.h>
#include <string.h>
#include <stdlib.h>
#include <leawi.h>
#include <ceeedcct.h>

main(void)
{
  _FEEDBACK fc;
  _POINTER address;
  _INT4 heapid, size;

  size = 1000;
  heapid = 999;

  CEEGTST(&heapid, &size, &address, &fc);
  if ((_FBCHECK (fc, CEE0P3)) == 0){
     printf("You specified a Heap Id that does not exist!\n\n");
     }
  printf("Try again:\n");
  heapid = 0;

  CEEGTST(&heapid, &size, &address, &fc);
  if ((_FBCHECK (fc, CEE000)) == 0){
     printf("Now it worked!\n");
     }
  else {
     printf("CEEGTST failed with message number%d \n", fc.tok_msgno);
     exit(99);
     }

  return 0;
}
```

Figure 75. C/C++ example testing for CEEGTST symbolic feedback code CEE0P3

COBOL

In Figure 76 on page 279, the symbolic feedback code file CEEIGZCT is accessed and a call is made to CEESDEXP (exponential base e). The first 8 bytes of the feedback code returned are tested against the symbolic feedback code CEE1UR to ensure that the input parameter is within the valid range for CEESDEXP. The symbolic feedback code table for CEESDEXP is listed in *z/OS Language Environment Programming Reference*. A message is displayed if the input parameter is out of range.

```
CBL LIB,QUOTE
      ************************************************
      *                                              *
      *  IBM Language Environment                    *
      *                                              *
      *  Licensed Materials - Property of IBM        *
      *                                              *
      *  5645-001 5688-198                           *
      *  (C) Copyright IBM Corp. 1991, 1997          *
      *  All Rights Reserved                         *
      *                                              *
      *  US Government Users Restricted Rights - Use, *
      *  duplication or disclosure restricted by GSA  *
      *  ADP Schedule Contract with IBM Corp.        *
      *                                              *
      ************************************************
      *Module/File Name: IGZTSFC
      ************************************************
      *                                              *
      * CTDEMO -  This routine assigns values to a   *
      *           condition token.                   *
      *                                              *
      ************************************************
       IDENTIFICATION DIVISION.
       PROGRAM-ID. CTDEMO.

       DATA DIVISION.
       WORKING-STORAGE SECTION.
       01 FBC.
           02  Condition-Token-Value.
           COPY  CEEIGZCT.
               03  Case-1-Condition-ID.
                   04  Severity    PIC S9(4) BINARY.
                   04  Msg-No      PIC S9(4) BINARY.
               03  Case-2-Condition-ID
                         REDEFINES Case-1-Condition-ID.
                   04  Class-Code  PIC S9(4) BINARY.
                   04  Cause-Code  PIC S9(4) BINARY.
               03  Case-Sev-Ctl    PIC X.
               03  Facility-ID     PIC XXX.
           02  I-S-Info            PIC S9(9) BINARY.
       01 X COMP-2 VALUE +2.0E+02.
       01 Y COMP-2.
       PROCEDURE DIVISION.
           CALL "CEESDEXP" USING X FBC Y.
           IF CEE1UR of FBC THEN
               DISPLAY "Argument X out of range"
                       " for CEEDEXP"
           END-IF

           GOBACK.
```

Figure 76. COBOL example testing for CEESDEXP symbolic feedback code CEE1UR

It is important that symbolic feedback codes be compared with only the first 8 bytes of the 12-byte condition token. To this end, you must code the COPY statements for the symbolic feedback code declarations in the right place within the condition token declaration.

In Figure 76, for example, symbolic feedback code `CEE1UR` is compared to the first 8 bytes of condition token `FBC` because of the correct placement of the COPY statements.

It is wrong to place the COPY statements before the declaration of `Condition-Token-Value` as shown in Figure 77, because the 8-byte symbolic feedback code blank-padded (X'40') to a length of 12 bytes would be compared to the full 12-byte condition token. The comparison would always fail, because the blanks would not match the ISI data in the last 4 bytes of the condition token.

```
       01 FBC
           COPY CEEIGZCT.                    <-----+  Incorrect
           COPY IGZIGZCT.                    <-----+  Incorrect
           02  Condition-Token-Value
               03  Case-1-Condition-ID.
                   04  Severity    PIC S9(4) BINARY.
                   04  Msg-No      PIC S9(4) BINARY.
               03  Case-2-Condition-ID
                         REDEFINES Case-1-Condition-ID.
                   04  Class-Code  PIC S9(4) BINARY.
                   04  Cause-Code  PIC S9(4) BINARY.
               03  Case-Sev-Ctl    PIC X.
               03  Facility-ID     PIC XXX.
           02  I-S-Info            PIC S9(9) BINARY.
⋮
```

Figure 77. Wrong placement of COBOL COPY statements for testing feedback code

PL/I

The example in Figure 78 on page 281 includes the symbolic feedback code file CEEIBMCT so that Language Environment feedback codes (with facility ID CEE) will be defined. FBCHECK (IBM-supplied) is called to compare the first 8 bytes of FC with the symbolic feedback code CEE000 to determine if the call to CEEMGET is successful. If it is, the message associated with feedback code CEE001 is printed.

```
*PROCESS MACRO;
 /* Module/File Name: IBMMGET                          */
 /****************************************************/
 /**                                                **/
 /**Function       : CEEMGET - Get a Message        **/
 /**                                                **/
 /****************************************************/
 PLIMGET: PROC OPTIONS(MAIN);

    %INCLUDE  CEEIBMAW;
    %INCLUDE  CEEIBMCT;

    DCL 01 CONTOK,                /* Feedback token */
           03 MsgSev    REAL FIXED BINARY(15,0),
           03 MsgNo     REAL FIXED BINARY(15,0),
           03 Flags,
              05 Case      BIT(2),
              05 Severity  BIT(3),
              05 Control   BIT(3),
           03 FacID     CHAR(3),      /* Facility ID */
           03 ISI   /* Instance-Specific Information */
                        REAL FIXED BINARY(31,0);
    DCL 01 FC,                    /* Feedback token */
           03 MsgSev    REAL FIXED BINARY(15,0),
           03 MsgNo     REAL FIXED BINARY(15,0),
           03 Flags,
              05 Case      BIT(2),
              05 Severity  BIT(3),
              05 Control   BIT(3),
           03 FacID     CHAR(3),      /* Facility ID */
           03 ISI   /* Instance-Specific Information */
                        REAL FIXED BINARY(31,0);
    DCL MSGBUF      CHAR(80);
    DCL MSGPTR      REAL FIXED BINARY(31,0);

    /* Give CONTOK value of condition CEE001         */
    ADDR( CONTOK ) -> CEEIBMCT = CEE001;
    MSGPTR = 0;

    /* Call CEEMGET to retrieve msg corresponding    */
    /*    to condition token                         */
    CALL CEEMGET ( CONTOK, MSGBUF, MSGPTR, FC );
    IF  FBCHECK( FC, CEE000)  THEN  DO;
       PUT SKIP LIST( 'Message text for message number'
          || CONTOK.MsgNo || ' is "' || MSGBUF || '"');
       END;
    ELSE  DO;
       DISPLAY( 'CEEMGET failed with msg '
          || FC.MsgNo );
       STOP;
       END;

 END PLIMGET;
```

Figure 78. PL/I example testing for symbolic feedback code CEE000

Condition tokens for C signals under C and C++

You need the condition token representing an event as input to many Language Environment condition and message handling services. C signals have condition token representations that you can use for this purpose. Table 43 contains condition tokens for C signals seen in C or C++ applications running in a POSIX(OFF) environment. The signals listed in Table 43 have a condition token representation with facility ID of EDC.

Table 43. Language Environment condition tokens and non-POSIX C signals

Severity	Message number	Symbolic feedback code	Case	Severity	Control	ID	Signal name	Signal number
3	6000	EDC5RG	1	3	1	EDC	SIGFPE	8
3	6001	EDC5RH	1	3	1	EDC	SIGILL	4
3	6002	EDC5RI	1	3	1	EDC	SIGSEGV	11
3	6003	EDC5RJ	1	3	1	EDC	SIGABND	18
3	6004	EDC5RK	1	3	1	EDC	SIGTERM	15
3	6005	EDC5RL	1	3	1	EDC	SIGINT	2
2	6006	EDC5RM	1	2	1	EDC	SIGABRT	3
3	6007	EDC5RN	1	3	1	EDC	SIGUSR1	16
3	6008	EDC5RO	1	3	1	EDC	SIGUSR2	17
1	6009	EDC5RP	1	1	1	EDC	SIGIOERR	27

Table 44 contains condition token for C signals seen in C or C++ applications running in a POSIX(ON) environment. The signals listed in Table 44 have a condition token representation with facility ID of CEE.

Table 44. Language Environment condition tokens and POSIX C signals

Severity	Message number	Symbolic feedback code	Case	Severity	Control	ID	Signal name	Signal number
3	5201	CEE52H	1	3	1	CEE	SIGFPE	8
3	5202	CEE52I	1	3	1	CEE	SIGILL	4
3	5203	CEE52J	1	3	1	CEE	SIGSEGV	11
3	5204	CEE52K	1	3	1	CEE	SIGABND	18
3	5205	CEE52L	1	3	1	CEE	SIGTERM	15
3	5206	CEE52M	1	3	1	CEE	SIGINT	2
2	5207	CEE52N	1	2	1	CEE	SIGABRT	3
3	5208	CEE52O	1	3	1	CEE	SIGUSR1	16
3	5209	CEE52P	1	3	1	CEE	SIGUSR2	17
3	5210	CEE52Q	1	3	1	CEE	SIGHUP	1
3	5211	CEE52R	1	3	1	CEE	SIGSTOP	7
3	5212	CEE52S	1	3	1	CEE	SIGKILL	9
3	5213	CEE52T	1	3	1	CEE	SIGPIPE	13
3	5214	CEE52U	1	3	1	CEE	SIGALRM	14
1	5215	CEE52V	1	1	1	CEE	SIGCONT	19
1	5216	CEE530	1	1	1	CEE	SIGCHLD	20

Table 44. Language Environment condition tokens and POSIX C signals (continued)

Severity	Message number	Symbolic feedback code	Case	Severity	Control	ID	Signal name	Signal number
3	5217	CEE531	1	3	1	CEE	SIGTTIN	21
3	5218	CEE532	1	3	1	CEE	SIGTTOU	22
1	5219	CEE533	1	1	1	CEE	SIGIO	23
3	5220	CEE534	1	3	1	CEE	SIGQUIT	24
3	5221	CEE535	1	3	1	CEE	SIGTSTP	25
3	5222	CEE536	1	3	1	CEE	SIGTRAP	26
1	5223	CEE537	1	1	1	CEE	SIGIOERR	27
1	5224	CEE538	1	1	1	CEE	SIGDCE	38
3	5225	CEE539	1	3	1	CEE	SIGPOLL	5
3	5226	CEE53A	1	3	1	CEE	SIGURG	6
3	5227	CEE53B	1	3	1	CEE	SIGBUS	10
3	5228	CEE53C	1	3	1	CEE	SIGSYS	12
1	5229	CEE53D	1	1	1	CEE	SIGWINCH	28
1	5230	CEE53E	1	1	1	CEE	SIGXCPU	29
1	5231	CEE53F	1	1	1	CEE	SIGXFSZ	30
3	5232	CEE53G	1	3	1	CEE	SIGVTALRM	31
3	5233	CEE53H	1	3	1	CEE	SIGPROF	32
	5234	CEE53I	1	1	1	CEE	SIGDUMP	39
	5235	CEE53J	1	1	1	CEE	SIGDANGER	33
	5236	CEE53K	1	1	1	CEE	SIGTHSTOP	34
	5237	CEE53L	1	1	1	CEE	SIGTHCONT	35

q_data structure for abends

When Language Environment fields an abend, condition CEE35I (corresponding to message number 3250) is raised. Language Environment provides *q_data* (qualifying data) for system or user abends as part of the ISI token for condition CEE35I. The q_data can be retrieved using the CEEGQDT callable service from within a CEEHDLR-established condition handler; see "Example illustrating retrieval of q_data" on page 284 for an example invocation, and *z/OS Language Environment Programming Reference* for syntax of the CEEGQDT service. From a Fortran routine, you can use the Fortran-specific callable services and functions described in *Language Environment for MVS & VM Fortran Run-Time Migration Guide* to retrieve the q_data, and you do not need to use the q_data_token. The q_data associated with abends is also listed by message number in *z/OS Language Environment Runtime Messages*.

q_data is comprised of a list of addresses pointing to information that can be used by HLL and user-written condition handlers to react to a condition. The q_data structure for an abend is shown in Figure 79 on page 284.

If an abend occurs, Language Environment signals condition CEE35I (corresponding to message number 3250) and builds the q_data structure shown in Figure 79 on page 284.

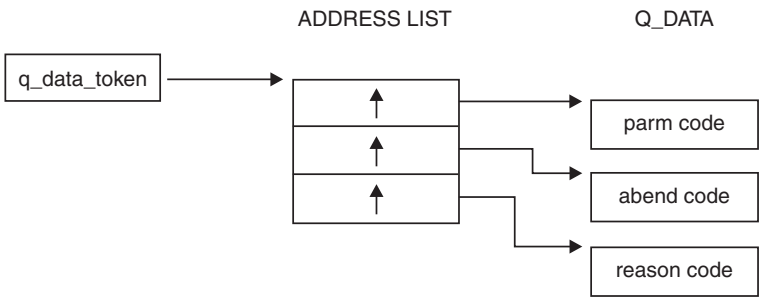

Figure 79. Structure of abend qualifying data

parm count (input)
A fullword field containing the total number of parameters in the q_data structure, including *parm count*. In this case, the value of *parm count* is a fullword containing the integer 3.

abend code (input)
A 4-byte field containing the abend code in the following format:

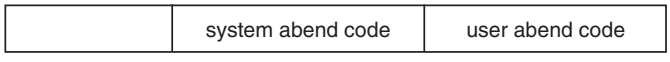

system abend code
The 12-bit system completion (abend) code. If these bits are all zero, then the abend is a user abend.

user abend code
The 12-bit user completion (abend) code. The abend is a user abend when bits 8 through 19 are all zero.

reason code (input)
A 4-byte field containing the reason code accompanying the abend code. If a reason code is not available (as occurs, for example, in a CICS abend), *reason code* has the value zero.

Usage notes

- You can use the CEEGQDT callable service to retrieve the q_data_token; see *z/OS Language Environment Programming Reference* for more information.
- From a Fortran routine, you can retrieve the qualifying data using Fortran-specific callable services and functions, which are described in *Language Environment for MVS & VM Fortran Run-Time Migration Guide*.

Example illustrating retrieval of q_data

The following example shows how the abend code can be retrieved from q_data by invoking the CEEGQDT callable service within a CEEHDLR-established condition handler written in COBOL. For an example of a working program that includes the following code, see member IGZTCHDL in library CEE.SCEESAMP.

```
ID DIVISION.
 PROGRAM-ID. GETQDATA.
ENVIRONMENT DIVISION.
DATA DIVISION.
 WORKING-STORAGE SECTION.
```

```
*****************************************************************
*  Data items for retrieving q_data, including the              *
*  q_data_token, q_data pointers, and the q_data itself.        *
*  Q-DATA-TOKEN is a pointer to a list of pointers that point *
*  to the q_data.                                               *
*****************************************************************
  77  Q-DATA-TOKEN   USAGE POINTER.

  LINKAGE SECTION.
*****************************************************************
*  Mapping for the 12-byte Language Environment feedback        *
*  code, which holds information about the condition that       *
*  caused this condition handler to get control.  It is         *
*  passed from the Language Environment condition manager.      *
*****************************************************************
  01  CURRENT-CONDITION.
    05  FIRST-8-BYTES.
        COPY CEEIGZCT.
        COPY IGZIGZCT.
        10  C-SEVERITY PIC 9(4) USAGE BINARY.
        10  C-MSGNO    PIC 9(4) USAGE BINARY.
        10  C-FC-OTHER PIC X.
        10  C-FAC-ID   PIC X(3).
    05  C-I-S-INFO PIC 9(9) USAGE BINARY.

*****************************************************************
*  TOKEN is the 4-byte token passed from the condition          *
*  manager.  It can contain data from the program that          *
*  registered this condition handler.                           *
*****************************************************************
  01  TOKEN              PIC X(4).
*****************************************************************
*  RESULT-CODE is passed back to the Language Environment       *
*  condition manager to indicate what it should do              *
*  with this condition:  resume, percolate, or promote.         *
*****************************************************************
  01  RESULT-CODE         PIC S9(9) USAGE BINARY.
    88 RESUME             VALUE 10.
    88 PERCOLATE          VALUE 20.
    88 PROMOTE            VALUE 30.
    88 PROMOTE-SF         VALUE 31.
*****************************************************************
*  NEW-CONDITION is the 12-byte feedback code for the new       *
*  condition that must be specified for RESULT-CODE values of *
*  30, 31, or 32, indicating that a new condition is to be      *
*  promoted.                                                    *
*****************************************************************
  01  NEW-CONDITION       PIC X(12).


 *****************************************************************
*  Data items for retrieving q_data, including the              *
*  q_data_token, q_data pointers, and the q_data itself,        *
*  which consists of a parm count, an abend code, and a         *
*  reason code.                                                 *
*****************************************************************
  01  Q-DATA-PTRS    USAGE POINTER.
    05  Q-DATA-PARM-COUNT-PTR.
    05  Q-DATA-ABEND-CODE-PTR.
    05  Q-DATA-REASON-CODE-PTR.
  01  PARM-COUNT          PIC S9(9) USAGE BINARY.
  01  ABEND-CODE          PIC S9(9) USAGE BINARY.
  01  REASON-CODE         PIC S9(9) USAGE BINARY.


  PROCEDURE DIVISION USING CURRENT-CONDITION TOKEN RESULT-CODE
                           NEW-CONDITION.
```

```
      EVALUATE TRUE
*****************************************************************
*       When Language Environment fields a system or user       *
*       abend, condition CEE35I (corresponding to message       *
*       number 3250) is raised.  The following code uses        *
*       callable service CEEGQDT to get the q_data and examine  *
*       the abend code.                                         *
*****************************************************************
        WHEN CEE35I OF CURRENT-CONDITION
          PERFORM
*****************************************************************
*           Get q_data for the condition we are handling.       *
*****************************************************************
            CALL "CEEGQDT" USING CURRENT-CONDITION
                                 Q-DATA-TOKEN FC
            IF SEVERITY > 0 THEN
               DISPLAY "CALL to CEEGQDT failed with "
                       "Severity = " SEVERITY
               DISPLAY "                and message "
                       "number   = " MSGNO
               GOBACK
            END-IF
*****************************************************************
*           Set up pointers to get ABEND-CODE.                  *
*****************************************************************
            SET ADDRESS OF Q-DATA-PTRS TO Q-DATA-TOKEN
            SET ADDRESS OF ABEND-CODE TO Q-DATA-ABEND-CODE-PTR
*****************************************************************
*           Select handler code based on ABEND-CODE.            *
*****************************************************************
            EVALUATE ABEND-CODE
               WHEN 777
                 DISPLAY "Severe Error!  Condition Handling "
                         "should not get control for IMS Abends"
                 SET PERCOLATE TO TRUE
               WHEN OTHER
                 CONTINUE
            END-EVALUATE
          END-PERFORM

*****************************************************************
*       Handle all other conditions here.                       *
*****************************************************************
        WHEN OTHER
          CONTINUE

      END-EVALUATE

   END-PROGRAM GETQDATA.
```

q_data structure for arithmetic program interruptions

If one of the arithmetic program interruptions shown in Table 45 occurs, and the corresponding condition is signaled, Language Environment builds the q_data structure shown in Figure 80 on page 287.

Table 45. Arithmetic program interruptions and corresponding conditions

Program interruption (see notes 1 and 2)	Program interruption code	Condition	Message number
Fixed-point overflow exception	08	CEE348	3208
Fixed-point divide exception	09	CEE349	3209
Exponent-overflow exception	0C	CEE34C	3212

Table 45. Arithmetic program interruptions and corresponding conditions (continued)

Program interruption (see notes 1 and 2)	Program interruption code	Condition	Message number
Exponent-underflow exception	0D	CEE34D	3213
Floating-point divide exception	0F	CEE34F	3215
Unnormalized-operand exception	1E	CEE34U	3230

Notes:

1. The square root exception is also an arithmetic program interruption, but is treated like the condition from the square root mathematical routine.
2. An arithmetic program interruption that occurs on a vector instruction is presented to a user-written condition handler in the same form as though it had occurred on a scalar instruction. A single vector instruction could cause multiple, possibly different, program interruptions to occur, but each interruption is presented individually.

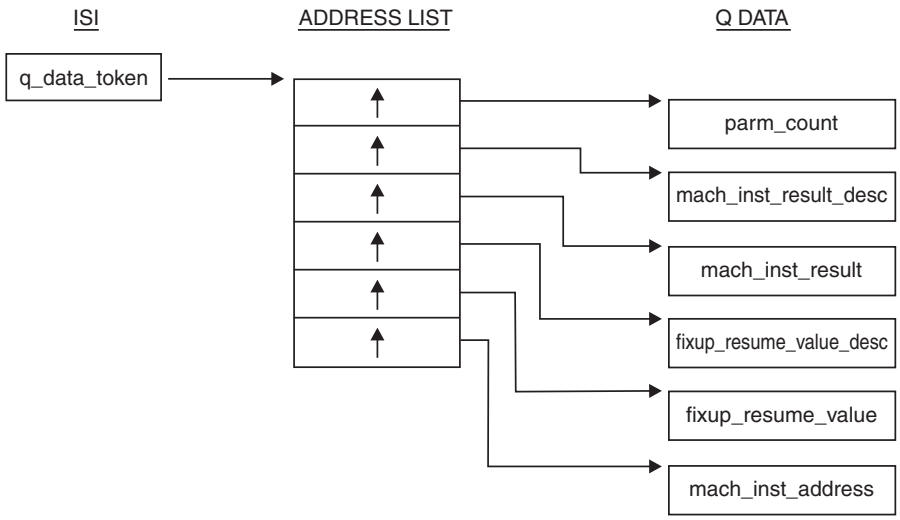

Figure 80. q_data structure for arithmetic program interruption conditions

The q_data structure shown in Figure 80 is built by Language Environment for the conditions of exponent overflow, exponent underflow, floating-point divide, fixed-point overflow, fixed-point divide, and unnormalized-operand exceptions. As a result, the q_data structure provides the following information:

`q_data_token (input)`
The 4-byte address of the address list. This value is returned by the CEEGQDT callable service.

`parm_count (input)`
A 4-byte binary integer containing the value 6, which is the total number of q_data fields in the q_data structure, including parm_count.

`mach_inst_result_desc (input)`
The q_data descriptor for *mach_inst_result*. (See "Format of q_data descriptors" on page 293 for information about q_data descriptors.)

`mach_inst_result (input)`
The value left in the machine register (general register, floating-point register, or element of a vector register) by the failing machine instruction. Based on the program interruption, *mach_inst_result* has one of the following lengths and types (as reflected in the q_data descriptor field *mach_inst_result_desc*):

Program interruption	Length and type
Fixed-point overflow exception	4- or 8-byte binary integer
Fixed-point divide exception	8-byte binary integer
Exponent-overflow exception	4-, 8-, or 16-byte floating-point number
Exponent-underflow exception	4-, 8-, or 16-byte floating-point number
Floating-point divide exception	4-, 8-, or 16-byte floating-point number
Unnormalized-operand exception (occurs only on vector instructions)	4- or 8-byte floating-point number

This is also the result value with which execution is resumed when the user condition handler requests the resume action (result code 10).

fixup_resume_value_desc (input)
The q_data descriptor for *fixup_resume_value*.

fixup_resume_value (input/output)
The fix-up value which, for the exceptions other than the unnormalized-operand exception, is the result value with which execution is resumed when the user condition handler requests the fix-up and resume action (result code 60 with a condition token of CEE0CF). *fixup_resume_value* initially has one of the following values:

- For an exponent-underflow exception, the value 0
- For an unnormalized-operand exception, the value 0
- For one of the other program interruptions, the same value as in *mach_inst_result*

Based on the program interruption, *fixup_resume_value* has the following lengths and types (as reflected in the q_data descriptor field *fixup_resume_value_desc*):

Program interruption	Length and type
Fixed-point overflow exception	4- or 8-byte binary integer
Fixed-point divide exception	8-byte binary integer **or** two 4-byte binary integers (remainder, quotient)
Exponent-overflow exception	4-, 8-, or 16-byte floating-point number
Exponent-underflow exception	4-, 8-, or 16-byte floating-point number
Floating-point divide exception	4-, 8-, or 16-byte floating-point number
Unnormalized-operand exception (occurs only on vector instructions)	4- or 8-byte floating-point number

mach_inst_address (input)
The address of the machine instruction causing the program interruption.

Usage notes

- You can use the CEEGQDT callable service to retrieve the q_data_token; see *z/OS Language Environment Programming Reference* for more information.
- From a Fortran routine, you can retrieve the qualifying data using Fortran-specific callable services and functions, which are described in *Language Environment for MVS & VM Fortran Run-Time Migration Guide*.
- Using the q_data structure, a user condition handler can resume either with:
  - The resume action (result code 10) using the value in *mach_inst_result*. The effect is the same as though execution had continued without any change to the register contents left by the machine instruction.

  - The fix-up and resume action (result code 60 with a condition token of CEE0CF) for exceptions other than unnormalized-operand. This allows any value to be placed in the result register that the machine instruction used.
- You can use the CEE3SPM callable service to set or reset the exponent-underflow mask bit in the program mask; the bit controls whether a program interruption occurs when exponent-underflow occurs, as follows:
  - When the bit is on, the program interruption occurs and condition CEE34D is signaled.
  - When the bit is off, no program interruption occurs; therefore no condition is signaled.

  See *z/OS Language Environment Programming Reference* for more information about the CEE3SPM callable service.

q_data structure for square-root exception

A *square-root exception* is the program interruption that occurs when a square root instruction is executed with a negative argument. If a square-root exception occurs and the corresponding condition as shown in Table 46 is signaled, Language Environment builds the q_data structure shown in Figure 81 on page 290.

Table 46. Square-root exception and corresponding condition

Program interruption	Program interruption code	Condition	Message number
Square-root exception	1D	CEE1UQ	2010

For a square-root exception, Language Environment signals the same condition (CEE1UQ) as it does when one of the square root routines detects a negative argument. For this exception, a user-written condition handler can request the same resume and fix-up and resume actions that it can request when the condition is signaled by one of the square root routines.

q_data structure for math and bit-manipulation conditions

For conditions that occur in the mathematical or bit manipulation routines, the Language Environment condition manager creates q_data that user condition handlers can use to handle the condition. The q_data structure is shown in Figure 81 on page 290, and is the same for all entry points of the mathematical and bit manipulation routines.

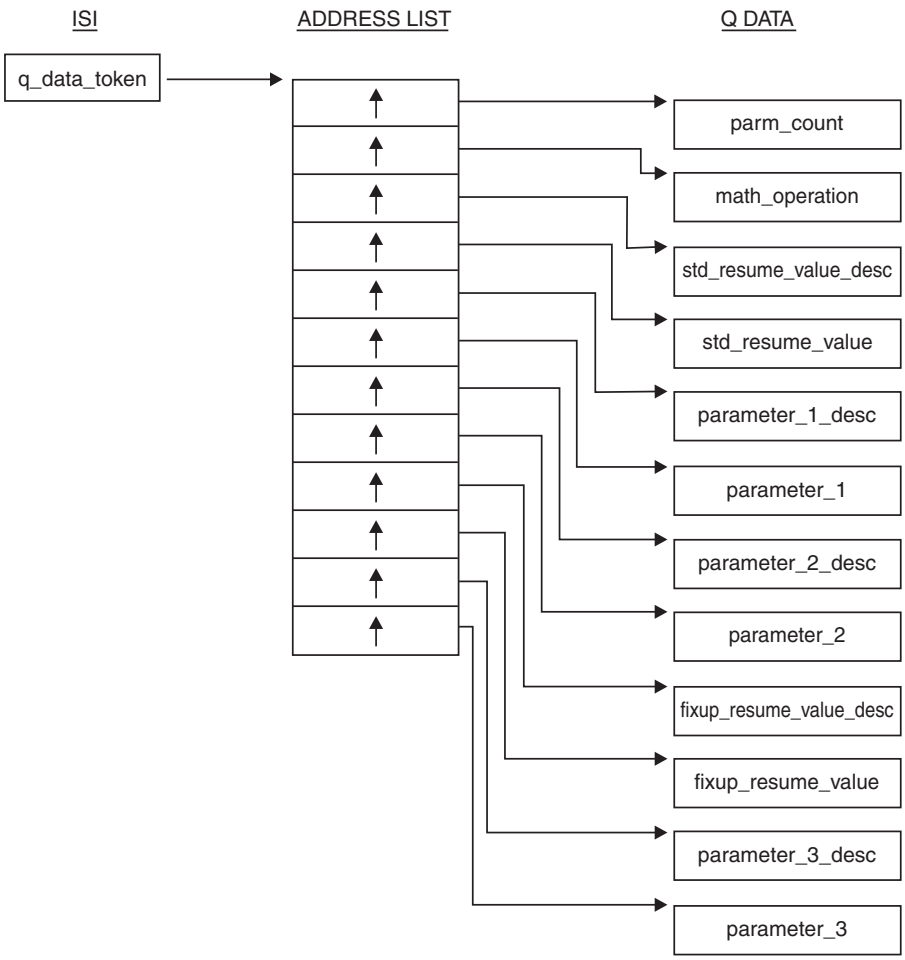

Figure 81. q_data structure for math and bit manipulation routines

The following information is provided by the q_data structure shown in Figure 81:

q_data_token (input)
The 4-byte address of the address list. This value is returned by the CEEGQDT callable service.

parm_count (input)
A 4-byte binary integer containing the value 10, which is the total number of q_data fields in the q_data structure, including *parm_count*.

math_operation (input)
An 8-byte field containing an abbreviation for the mathematical or bit manipulation operation for which the condition occurred. The field is left-justified and padded with blanks. (See Table 47 on page 292 for a list of the abbreviations.)

std_resume_value_desc (input)
The q_data descriptor for *std_resume_value*.

std_resume_value (input)
A default value used as the result of the mathematical or bit manipulation function when the user condition handler requests the resume action (result code 10). The length and type of this field are dependent on *math_operation* and are reflected in the q_data descriptor *std_resume_value_desc*.

parameter_1_desc (input)
The q_data descriptor for *parameter_1*.

parameter_1 (input/output)
The value of the first parameter provided to the mathematical or bit manipulation routine. The length and type of this field are dependent on *math_operation* and are reflected in the q_data descriptor *parameter_1_desc*.

This is the value of the first parameter that is used as input to the routine when the user condition handler requests a resume with new input value (result code 60 with a new condition token of CEE0CE).

parameter_2_desc (input)
The q_data descriptor for parameter_2 if the mathematical or bit manipulation routine has two input parameters. (If the routine has only one parameter, the q_data structure has an address slot for this field, but the address is not meaningful and the field must not be referenced.)

parameter_2 (input/output)
The value of the second parameter provided to the mathematical or bit manipulation routine if the routine has two input parameters. (If the routine has only one parameter, the q_data structure has an address slot for this field, but the address is not meaningful and the field must not be referenced.) The length and type of the field are dependent on *math_operation* and are reflected in the q_data descriptor *parameter_2_desc*.

This is the value of the second parameter that is used as input to the routine when the user condition handler requests a resume with new input value (result code 60 with a new condition token of CEE0CE).

fixup_resume_value_desc (input)
The q_data descriptor for *fixup_resume_value*. (See "Format of q_data descriptors" on page 293 for more information about q_data descriptors.)

fixup_resume_value (output)
The value to be used as the result of the mathematical or bit manipulation function when the user condition handler requests a resume with new output value (result code 60 with a new condition token of CEE0CF). The length and type of this field are dependent on *math_operation* and are reflected in the q_data descriptor *fixup_resume_value_desc*.

parameter_3_desc (input)
The q_data descriptor for *parameter_3* if the mathematical or bit manipulation routine has three input parameters. (If the routine has only one (or two) parameter(s), the q_data structure has an address slot for this field, but the address is not meaningful and the field must not be referenced.)

parameter_3 (input/output)
The value of the third parameter provided to the mathematical or bit manipulation routine if the routine has three input parameters. (If the routine has only one (or two) parameter(s), the q_data structure has an address slot for this field, but the address is not meaningful and the field must not be referenced.) The length and type of the field are dependent on *math_operation* and are reflected in the q_data descriptor *parameter_3_desc*.

This is the value of the third parameter that is used as input to the routine when the user condition handler requests a resume with new input value (result code 60 with a new condition token of CEE0CE).

Table 47. Abbreviations of math operations in q_data structures. Column two shows the abbreviations that can occur in field math_operation for the math operations shown in column one.

Mathematical operation	Abbreviation
Logarithm Base *e*	LN
Logarithm Base 10	LOG
Logarithm Base 2	LOG2
Exponential (base *e*)	E**Y
Exponentiation (*x* raised to the power *y*)	X**Y
Arcsine	ARCSIN
Arccosine	ARCCOS
Arctangent	ARCTAN
Arctangent2	ARCTAN2
Sine	SIN
Cosine	COS
Tangent	TAN
Cotangent	COTAN
Hyperbolic Sine	SINH
Hyperbolic Cosine	COSH
Hyperbolic Tangent	TANH
Hyperbolic Arctangent	ARCTANH
Square Root	SQRT
Error Function	ERF
Error Function Complement	ERFC
Gamma Function	GAMMA
Log Gamma Function	LOGGAMMA
Absolute Value Function	ABS
Modular Arithmetic	MOD
Truncation	TRUNC
Imaginary Part of Complex	IPART
Conjugate of Complex	CPART
Nearest Whole Number	NWN
Nearest Integer	NINT
Positive Difference	POSDIFF
Transfer of Sign	XFERSIGN
Floating Complex Multiply	CPLXMULT
Floating Complex Divide	CPLXDIVD
Bit Shift	ISHFT
Bit Clear	IBCLR
Bit Set	IBSET
Bit Test	BTEST

Usage notes

- You can use the CEEGQDT callable service to retrieve the q_data_token; see *z/OS Language Environment Programming Reference* for details.
- From a Fortran routine, you can retrieve the qualifying data using Fortran-specific callable services and functions, which are described in *Language Environment for MVS & VM Fortran Run-Time Migration Guide*.
- A user condition handler can request one of three different actions to continue the execution of a failing mathematical or bit manipulation routine:
  - The resume action (result code 10). The value in *std_resume_value* (either the default value provided to the user condition handler or a modified value provided by the user condition handler) becomes the final result value for the routine.
  - The resume with new input value action (result code 60 with a new condition token of CEE0CE). The values to be used as parameters for invoking the routine again are provided by the user condition handler in *parameter_1* and, if applicable, in *parameter_2*.
  - The resume with new output value action (result code 60 with a new condition token of CEE0CF). The *fixup_resume_value* value provided by the user condition handler becomes the final result value for the routine.

Format of q_data descriptors

q_data descriptors contain additional information you need to fix up the parameter or result fields of the math q_data structures, the result field of the program interruption q_data structures, or fields for any conditions whose q_data structures contain q_data descriptors. The descriptors contain information about the length and data type of these fields. The format of the q_data descriptor is illustrated in Figure 82.

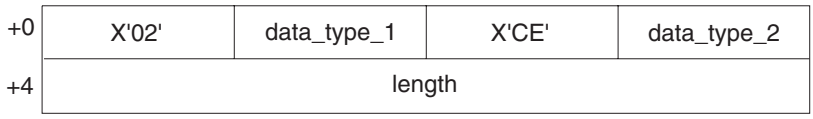

Figure 82. Format of a q_data descriptor

The following information is provided by the q_data descriptor shown in Figure 82:

data_type_1
A 1-byte binary integer value that, along with *data_type_2*, indicates the data type. See Table 48 on page 294 for the values and their corresponding data types.

data_type_2
A 1-byte binary integer value that, along with *data_type_1*, indicates the data type. See Table 48 on page 294 for the values and their corresponding data types.

length
A 4-byte binary integer value that represents the length of the data.

For each type code that can occur in a q_data descriptor, Table 48 on page 294 shows the corresponding data type.

Table 48. q_data descriptor data types

data_type_1 type code	data_type_2 type code	Description
2	0	String of single-byte characters with no length prefix or ending delimiter
1	13	Signed binary integer whose length is 1, 2, 4, or 8 bytes
1	14	Floating-point number whose length is 4, 8, or 16 bytes
1	15	Complex number whose length is 8, 16, or 32 bytes
1	18	Unsigned binary integer whose length is 1 byte

Chapter 19. Using and handling messages

This topic describes how you can use the Language Environment message services to create, issue, and handle messages for Language Environment-conforming applications.

How Language Environment messages are handled

The Language Environment message services provide a common method of handling and issuing messages for Language Environment-conforming applications.

When a condition is raised in your application, either Language Environment common routines or language-specific runtime routines can issue messages from the runtime message file. The messages can provide information about the condition and suggest possible solutions to errors.

You can use Language Environment callable services and runtime options to modify message handling, and control the destination of message output. You can also define a message log file to create a record of the messages that Language Environment issues.

Related runtime options:

MSGFILE
Specifies a file where runtime messages issued by Language Environment are logged

MSGQ
Specifies the maximum number of ISIs

NATLANG
Specifies the national language runtime message file

Related callable services:

CEEMGET
Gets a message

CEEMOUT
Dispatches a message

CEEMSG
Gets, formats, and dispatches a message

CEECMI
Stores and loads message insert data about a condition

Related utilities:

CEEBLDTX
Transforms source files into loadable TEXT files

See *z/OS Language Environment Programming Reference* for more information about the callable services syntax.

© Copyright IBM Corp. 1991, 2015

Creating messages

The following topics explain how to create messages to use in your routines. To create a message, you:

1. Create a message source file
2. Assemble the message source file with the CEEBLDTX utility
3. Create a message module table
4. Assign values to message inserts
5. Use messages in code to get message output

Creating a message source file

The message source file contains the message text and information associated with each message. Standard tags and format are used for message text and different types of message information. The tags and format of the message source files are used by the CEEBLDTX utility to transform the source file into a loadable TEXT file.

Under TSO/E, if you specify a partially qualified name, TSO/E adds the current prefix (usually userid) as the leftmost qualifier and TEXT as the rightmost qualifier. The message source file should have a fixed record format with a record length of 80.

When creating a message file, make sure your sequential numbering attribute is turned off in the editor so that trailing sequence numbers are not generated. Trailing blanks in columns 1–72 are ignored. At least one message data set (TSO/E) is required for each national language version of your messages.

All tags used to create the source file begin with a colon (:), followed by a keyword and a period (.). All tags must begin in column 1, except where noted. Comments in the message source file must begin with a period asterisk (.*) in the leftmost position of the input line.

Figure 83 shows an example of a message source file with a facility ID of XMP.

```
:facid.XMP
:msgno.10
:msgsubid.0001
:msgname.EXMPLMSG
:msgclass.I
:msg.This is an example of an insert,
:tab.+1
:ins 1.a simple insert
:msg., within a message.
:xpl.This is a simple example of how to put an insert into a message.
:presp.No programmer response required.
:sysact.No system action is taken.
```

Figure 83. Example of a message source file

The tags used in message source files are:

:facid. The facility ID is required at the beginning of every message file. It is used as the first 3 characters of the message number. All messages within a source file have the same facility ID. For example, all messages issued by Language Environment have a facility ID of CEE. The facility ID is

combined with a 4-digit identification number and the message severity code to form the message number. The facility ID can contain any alphanumeric (A–Z, a–z, 0–9) characters.

Omitting the facility ID tag, causes an error during the creation of the loadable message file. Errors are also caused by multiple occurrences of this tag, or by the use of blanks or special characters in the facility ID.

If your C application is running with POSIX(OFF), Language Environment issues messages with a facility ID of EDC for compatibility. For more information, see "Runtime messages with POSIX" on page 309.

Note: The facility ID is also used as the first 3 characters of the condition token.

:msgno.

This tag is required. The message number tag defines the beginning and end of information for a message. All information up to the next *:msgno.* tag refers to the current message. The message number appears as the 4 digits following the message prefix, and is used to identify the message in a message source file. Multiple messages can use the same message number, but only if a *:msgsubid.* tag is used within the message.

The message numbers used with the *:msgno.* tags must be in ascending order. The message numbers can be from 1 to 4 numeric (0–9) characters. Leading zeros will be added if fewer than 4 characters are used.

If your application is running with POSIX(ON), message numbers 5201 through 5209 are used whereas the same messages use message numbers 6000 through 6008 when POSIX(OFF) is in effect. For more information, see "Runtime messages with POSIX" on page 309.

:msgsubid.

This tag is optional. The message subidentifier tag distinguishes between different messages with the same message number. If every message has a unique message number, the *:msgsubid.* tag is unnecessary.

The numbers associated with the *:msgsubid.* tags must be unique and in ascending order within messages that have the same message number. The number associated with the *:msgsubid.* tag can be from 1 to 4 numeric (0–9) characters. Leading zeros will be added if fewer than 4 digits are used.

:msgname.

The *:msgname.* tag is used to give a name to a message. This name becomes the symbolic name of the condition token associated with the message, and is placed into the COPY file generated by the CEEBLDTX utility. For example, if EXMPLMSG is used for the *:msgname.* tag in a message with a facility ID of XMP, the symbolic feedback code for the condition associated with this message is also EXMPLMSG.

If a message name is omitted, the facility ID plus the base-32 equivalent of the message number is used as the symbolic message name. If additionally the *:msgsubid.* tag is used, the message subidentifier preceded by an underscore is appended to the message name. For example, if *:msgno.* has a value of 10 and the facility ID is XMP, the symbolic feedback code for the condition associated with a message is XMP00A. If additionally the *:msgsubid.* tag is used with a value of 0001, the symbolic feedback code is XMP00A_0001.

:msgclass.

This tag is required. The *:msgclass.* (or *:msgcl.*) tag makes up the final part

of the message identification. It requires a case-sensitive character that indicates the severity code of the message. This character corresponds to the level of severity of the condition token associated with the message. If the *:msgclass.* tag differs from the severity level of the condition token, the severity assigned to the condition token is used. Refer to Table 49 on page 308 for the severity codes, levels of severity, and condition descriptions.

:msg. The *:msg.* tag indicates the beginning of partial or complete text of the message to be displayed. The message text can appear in any national language known to Language Environment (including DBCS characters). For a list of the supported national languages, refer to *z/OS Language Environment Programming Reference*. The *:msg.* tag can be repeated as often as necessary to construct a message. It is not required if the message consists only of message inserts. If the message text for a message requires more than one line, all lines are left-aligned with the beginning of the first line of message text.

The message text ends with the last nonblank character. There is no fixed space reserved for the message, so there is no requirement to reserve any additional space for message translation.

:hex. The *:hex.* tag indicates the beginning of a hexadecimal character string. If used, it must be within the text of a *:msg.* tag. It is terminated by an *:ehex.* tag. The *:hex.* tag can occur anywhere within the message text.

:ehex. The *:ehex.* tag terminates a string of hexadecimal characters. This tag can occur anywhere within the message text.

:dbc. The *:dbc.* tag defines text of DBCS characters. The string itself cannot contain any SBCS characters, but it must begin with a shift-out character and end with a shift-in character.

:tab.n The *:tab.* tag indicates that the next part of the message will be tabbed over a given number of spaces or tabbed to a given column. If the number is preceded by a plus sign, it indicates the next part of the message will be moved over the specified number of spaces from the current position. Otherwise, the number indicates the column where the next message part will begin. The tab value must be between 1 and 255. If necessary, a new line of output is automatically created to accommodate the tab value. This includes the case where the current position is greater than a specified tab column.

:tbn. The *:tbn.* tag is used to force any text written on a subsequent line to start in the current column until an *:etbn.* tag is found.

:etbn. The *:etbn.* tag turns off the tabs set by a *:tbn.* tag.

:ins n.[text]

The *:ins.* tag defines a message insert. The insert is a variable that is assigned a value with the CEECMI callable service. The insert number (*n*) can be any number between 1 and 9. The text following the period describes the insert. This text is optional, and is included only in a message file when the value assigned to the insert is not known. For example, the text *variable name* after an insert tag indicates that a variable name is assigned to the insert.

One value can be assigned to each insert used in a message. Insert tags can be moved around, interchanged, or omitted, but the insert values cannot be changed. The order of the *:ins n.* tags, not the insert number, determines the order of the inserts.

:newline.
The *:newline.* tag creates a new message line that can be used for multiline messages.

:xpl. *This tag is optional*. The *:xpl.* tag indicates text used to explain the condition. It is not printed as part of the message, but is included if the message SCRIPT file is formatted and printed.

:presp.
This tag is optional. The *:presp.* tag indicates text that describes the suggested programmer response. It is not printed as part of the message, but is included if the message SCRIPT file is formatted and printed or displayed online.

:sysact.
This tag is optional. The *:sysact.* tag indicates text that describes the system action. It is not printed as part of the message, but is included if the message SCRIPT file is formatted and printed or displayed online.

Using the CEEBLDTX utility

z/OS UNIX interface

The syntax is as follows:

```
ceebldtx   [-C csect_name] [-I secondary_file_name]
           [-P] [-S] [-c class] [-d delimiter]
           [-l BAL | C | COBOL | FORTRAN | PLI] [-s id]
           in_file out_file
```

Note: ceebldtx utility is lowercase in the z/OS UNIX interface and only works with z/OS UNIX files; MVS data sets are not applicable.

Operands

in_file
Required. The name of the file containing the message source.

out_file
Required. The name of the resulting assembler source file containing the messages, inserts, and other items, suitable for input into the High Level Assembler. Extension of ".s" is assumed if none is present.

Options

-C csect_name

This option is used to explicitly specify the CSECT name. An uppercase version of the CSECT name will be used. By default, the CSECT name is the output file base name.

A CSECT name greater than 8 characters requires the use of the GOFF option when assembling the out_file.

-I secondary_file_name
The name of the secondary input file generated for the language specified with the -l (lowercase L) option. If no suffix is present in the secondary_file_name specified, the extension will be ".h" for C, ".fortran" for Fortran, and ".copy" for all others.

-P This option is used to save previous prologs, if files being generated already exist in the directory and contain prologs. By default, previous prologs are not reused.

-S This option is used to indicate sequence numbers should be generated in the files produced. By default, no sequence numbers are generated.

-c class
This option is used to specify the default value for :msgclass. in cases where the tag is not coded.

-d APOST | ' | QUOTE | "
This option is used to specify which COBOL delimiter to use. Used in combination with the -l (lowercase L) COBOL option. By default, APOST is used as the delimiter.

Note: Quotation marks should be escaped to avoid them being treated as shell meta characters.

Examples:

```
ceebldtx -l COBOL -I secondary_file_name -d \' in_file out_file
ceebldtx -l COBOL -I secondary_file_name -d \" in_file out_file
ceebldtx -l COBOL -I secondary_file_name -d QUOTE in_file out_file
```

-l BAL | C | COBOL | FORTRAN | PLI
This options is used to specify the language to be used in generating a secondary input file. Used in combination with the -I (uppercase i) secondary_file_name option. The file will contain declarations for the condition tokens associated with each message in the message source file. The language is accepted in lower and upper case.

Note: C370 is also supported.

-s id
This option is used to specify the default value for :msgsubid. in cases where the tag is not coded.

TSO/E interface

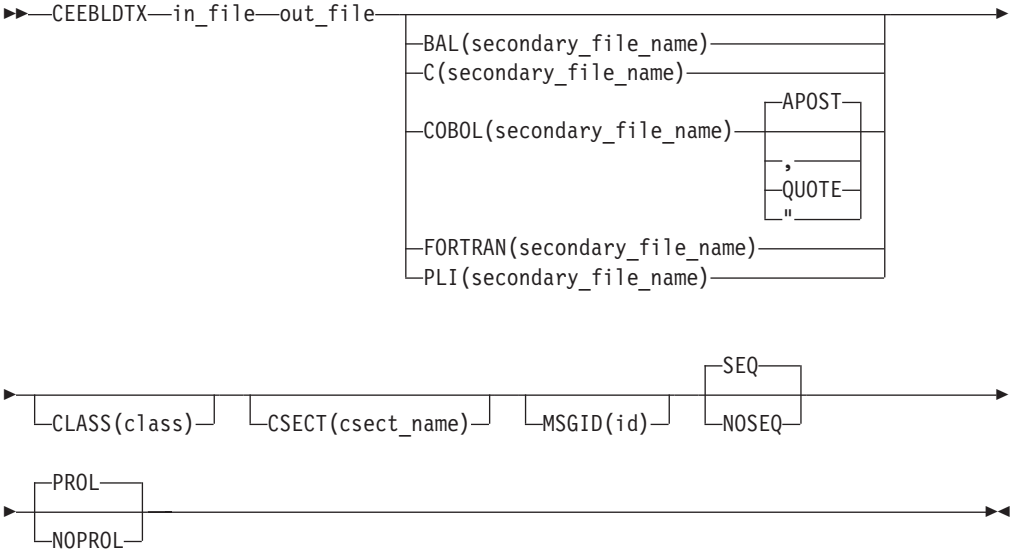

in_file
The name of the file containing the message source. The fully qualified data set name must be enclosed in single quotes if you do not want a TSO/E prefix.

out_file
The name of the resulting assembler source file containing the messages, inserts, and other items, suitable for input into the High Level Assembler. The fully qualified data set name must be enclosed in single quotes if you do not want a TSO/E prefix.

options

APOST | ' | QUOTE | "
Specify the delimiter to use, APOST is used by default. This option is used to specify which COBOL delimiter to use. Honored in combination with COBOL(secondary_file_name) option.

BAL(secondary_file_name) | C(secondary_file_name) | COBOL(secondary_file_name) | FORTRAN(secondary_file_name) | PLI(secondary_file_name)
secondary_file_name: The name of the secondary input file for the specified language. The file will contain declarations for the condition tokens associated with each message in the message source file. The fully qualified data set name must be enclosed in single quotes if you do not want a TSO/E prefix.

Note:

1. Only the last language (secondary_file_name) will be used.
2. C370(secondary_file_name) is also supported.

CLASS(class)
This option is used to specify the default value for :msgclass. in cases where the tag is not present.

CSECT(csect_name)

This option is used to explicitly specify the CSECT name. An uppercase version of the CSECT name will be used. By default, the CSECT name is the output file base name.

A CSECT name greater than 8 characters requires the use of the GOFF option when assembling the out_file.

MSGSID(id)
This option is used to specify the default value for :msgsubid. in cases where the tag is not present.

PROL | NOPROL
Specify PROL to reuse prolog from the previous file version, if previous version exists. Specify NOPROL to ignore the previous prolog. PROL is default.

SEQ | NOSEQ
Specify SEQ to generate files with sequence numbers. Specify NOSEQ to generate files without sequence number. SEQ is default.

Note: The CEEBLDTX utility is a REXX EXEC that resides in SCEECLST data set.

Files created by CEEBLDTX

The CEEBLDTX utility creates several files from the message source file. It creates an assembler source file, which can be assembled into an object ("TEXT") file and link-edited into a module in an MVS load library. When the name of the module is placed in a message module table, the Language Environment message services

can dynamically access the messages. See “Creating a message module table” on page 304 for more information about creating a message module table.

The CEEBLDTX utility optionally creates secondary input files (COPY or INCLUDE), which contain the declarations for the condition tokens associated with each message in the message source file. When a program uses the secondary input file, the condition tokens can then be used to reference the message from the message table. The *:msgname.* tag indicates the symbolic name of the condition token.

To use the CEEBLDTX utility with the sample file shown in Figure 83 on page 296, issue the environment corresponding command example below. After the *out_file* is generated, High Level Assembler can be used to assemble the out_file into an object and the binder can be used to link-edit the object into a module in an MVS load library. (A CSECT name greater than 8 characters requires the use of the High Level Assembler GOFF option for assembling the primary out_file.):

```
   TSO/E:
 CEEBLDTX example exmplasm pli(exmplcop)
```

The in_file is EXAMPLE, the out_file is EXMPLASM, and the PL/I secondary input file is EXMPLCOP.

```
   z/OS UNIX:
 ceebldtx -l PLI -I exmplcop example exmplasm
```

The in_file is example, the out_file is exmplasm.s, and the PL/I secondary input file is exmplcop.copy.

CEEBLDTX error messages

Language Environment issues the following messages for CEEBLDTX errors:

Return Code=-1 IRX0005I Machine storage exhausted

Explanation: Rexx terminated execution due to lack of storage. (See IRX0005I in the z/OS TSO/E Messages.)

Programmer response: Attempt one of the following options:

1. Increase the virtual storage space available on the system.
2. Split up the script in_file, into two or more files. Adjust the message module table for the corresponding split.

Return Code=0005 Error reading file *ssssssss*.

Explanation: Error occurred while reading file *ssssssss*.

Programmer response: Validate file accessibility.

Return Code=0006 Error erasing file *ssssssss*.

Explanation: Error occurred while erasing file *ssssssss*.

Programmer response: Validate file accessibility.

Return Code=0007 Error writing file *ssssssss*.

Explanation: Error occurred while writing file *ssssssss*.

Programmer response: Validate file accessibility.

Return Code=0008 Bad filename *ssssssss*: forward slash not allowed at the end of a filename.

Explanation: Filenames are not allowed to end with forward slashes.

Programmer response: Modify the filename to not end with a forward slash.

Return Code=0009 Option x requires an argument.

Explanation: Option specified must be accompanied by an argument.

Programmer response: Specify an argument with the option.

Return Code=0010 Invalid option = x. Valid options are: CIPScdls.

Explanation: Invalid option specified.

Programmer response: Specify zero or more valid options.

Return Code=0011 Bad data set name *ssssssss*.

Explanation: The data set name is not correctly specified.

Programmer response: Validate the name of the data set is correct.

Return Code=0020 CSECT name *ssssssss* is greater than 63 characters.

Explanation: The CSECT name *ssssssss* is greater than 63 characters and will cause an error during assembly.

Programmer response: Make sure the CSECT name is 63 characters or less.

Return Code=0021 CSECT name *ssssssss* does not begin with a letter, $, #, @ or underscore (_).

Explanation: The CSECT name *ssssssss* does not begin with a letter, $, #, @ or underscore (_) and will cause an error during assembly.

Programmer response: Make sure that the CSECT name *ssssssss* begins with a letter, $, #, @ or underscore (_).

Return Code=0028 *ssssssss* SCRIPT not found on any accessed disk.

Explanation: The SCRIPT file with the name *ssssssss* does not exist.

Programmer response: Make sure the name is given correctly and is accessible.

Return Code=0040 Error on line *nnn* in message *nnnn* Insert number greater than mmmm.

Explanation: An insert number greater than the allowable maximum was specified. The current maximum allowable insert number is 9.

Programmer response: Specify an insert number of 9 or less.

Return Code=0044 Error on line *nnn* Duplicate :FACID. tags found with the given script file.

Explanation: Only one facility ID can be specified in the SCRIPT file.

Programmer response: Specify only one facility ID in the SCRIPT file.

Return Code=0048 No :FACID. tag found within the given script file.

Explanation: A 3-character facility ID must be specified in the SCRIPT file with the :facid. tag.

Programmer response: Specify a 3-character facility ID with the :facid. tag.

Return Code=0052 Error on line *nnn* Message number *nnnn* found out of range mmmm to mmmm.

Explanation: A message was found with a number outside the valid range. The current valid range is 0 to 9999.

Programmer response: Correct the invalid message number on the given line of the SCRIPT file.

Return Code=0056 Number of hex digits not divisible by 2 on line *nnn* in message *nnnn*.

Explanation: Hexadecimal strings must contain an even number of digits.

Programmer response: Specify an even number of digits for the hexadecimal string.

Return Code=0060 Invalid hexadecimal digits on line *nnn* in message *nnnn*.

Explanation: Valid hexadecimal digits are 0–9 and A–F. Invalid digits were detected.

Programmer response: Specify only digits 0–9 and A–F within a hexadecimal string.

Return Code=0064 Number of DBCS bytes not divisible by 2 on line *nnn* in message *nnnn*.

Explanation: Doublebyte character strings must contain an even number of bytes.

Programmer response: Specify an even number of bytes for the doublebyte character string.

Return Code=0068 PLAS out_file name must be longer than the message facility ID *pppp*.

Explanation: The ASSEMBLE file name must be greater than 3 characters.

Programmer response: Specify an ASSEMBLE out_file name of greater than 3 characters.

Return Code=0072 Message facility ID *pppp* on line *nnn* was longer than 4 characters.

Explanation: Facility ID must be exactly 3 characters long, with no blanks.

Programmer response: Specify a 3-character facility ID.

Return Code=0076 Message class on line *nnn* was not a valid message class type: IWESCFA.

Explanation: Message class must be one of the valid message classes.

Programmer response: Specify a valid message class.

Return Code=0080 Tag not recognized on line *nnn*.

Explanation: A tag that was not recognized was encountered.

Programmer response: Check the tag for proper spelling and use.

Return Code=0084 The first tag was not a :FACID. tag on line *nnn*.

Explanation: The first tag of the SCRIPT file must be the facility ID tag.

Programmer response: Specify the facility ID tag as the first tag in the SCRIPT file.

Return Code=0088 Unexpected tag found on line *nnn*.

Explanation: A valid tag was found in an unexpected location in the SCRIPT file; it is likely out of order.

Programmer response: Check the order of the tags in the SCRIPT file.

Return Code=0092 Duplicate tags *ttt* found on line *nnn*.

Explanation: Duplicate :msgname., :msgclass., or :msgsubid. tags were found for a single message.

Programmer response: Remove the extra tag from the message script.

Return Code=0096 No :MSGNO. tags found within the given SCRIPT file.

Explanation: A message file must have at least one message in it, and it must be denoted by a :msgno. tag.

Programmer response: Specify at least one message in the message file.

Return Code=0098 No :MSGCLASS. (or :MSGCL.) tag found for message *nnnn*.

Explanation: A :msgclass. (or :msgcl.) tag was not found for message *nnnn*.

Programmer response: Specify a :msgclass. tag to indicate the severity code of the message and verify the tag is located after the :msgno. tag. Alternatively you can use the -c (CLASS) option to provide a default value for messages which have no :msgclass. (or :msgcl.) tag specified.

Return Code=0100 Insert number was not provided or was less than 1 on line *nnn*.

Explanation: A positive insert number must be provided for each insert.

Programmer response: Specify a positive insert number of 9 or less for the insert.

Return Code=0104 Message subid was out of the range mmmm to mmmm on line *nnn*.

Explanation: A message subid was found with a number outside the valid range. The current valid range is 0 to 9999.

Programmer response: Correct the invalid message subid on the given line of the SCRIPT file.

Return Code=0108 Existing secondary file, *ssssssss*, found, but not on A-disk.

Explanation: A secondary file with the name *ssssssss* doe not exist on A-disk.

Programmer response: Make sure the name is given correctly and is accessible.

Return Code=0112 The Current ADDRESS environment not CMS, TSO/E, or z/OS UNIX.

Explanation: CEEBLDTX utility is not being executed in a supported environment.

Programmer response: Transport the utility to either CMS, TSO/E, or z/OS UNIX environment and try executing again.

Return Code=nnn Undefined error number *nnn* issued.

Explanation: An undefined error was encountered.

Programmer response: Contact your service representative.

Creating a message module table

Language Environment locates the user-created messages using a message module table that you code in assembler.

The message module table begins with a header that indicates the number of languages in the table. In Figure 84, for example, only English is used, so the first fullword of the header declares the constant F'1'.

```
         TITLE 'UXMPMSGT'
UXMPMSGT CSECT
         DC   F'1'               number of languages
         DC   CL8'ENU     '      language identifier
         DC   A(TABLEENU)        pointer to first language table
TABLEENU DC   F'01'               lowest message number in module
         DC   F'100'              highest message number in module
         DC   CL8'EXMPLASM'       message module name
         DC   F'-1'               flags indicating the last...
         DC   F'-1'                 16-byte entry (a dummy entry)...
         DC   CL8'DUMMY'            in the language table
         END  UXMPMSGT
```

Figure 84. Example of a message module table with one language

In the message module table in Figure 85, however, English and Japanese are used, so the first fullword of the header declares the constant F'2'. Following the message module table header are tables for each language.

```
         TITLE 'UZOGMSGT'
UZOGMSGT CSECT
         DC   F'2'               number of languages
         DC   CL8'ENU     '      first language identifier
         DC   A(TABLEENU)        pointer to first language table
         DC   CL8'JPN     '      second language identifier
         DC   A(TABLEJPN)        pointer to second language table
TABLEENU DC   F'01'               lowest message number in first module
         DC   F'100'              highest message number in first module
         DC   CL8'ZOGMSGE1'       first message module name
         DC   F'101'              lowest message number in second module
         DC   F'200'              highest message number in second module
         DC   CL8'ZOGMSGE2'       second message module name

⋮
         DC   F'-1'               flags indicating the last...
         DC   F'-1'                 16-byte entry (a dummy entry)...
         DC   CL8'DUMMY'            in the language table
TABLEJPN DC   F'01'               lowest message number in first module
         DC   F'100'              highest message number in first module
         DC   CL8'ZOGMSGJ1'       first message module name
         DC   F'101'              lowest message number in second module
         DC   F'200'              highest message number in second module
         DC   CL8'ZOGMSGJ2'       second message module name

⋮
         DC   F'-1'               flags indicating the last...
         DC   F'-1'                 16-byte entry (a dummy entry)...
         DC   CL8'DUMMY'            in the language table
         END  UZOGMSGT
```

Figure 85. Example of a message module table with two languages

Each language table has one or more 16-byte entries that indicate the name of a load module and the range of message numbers the module contains. The first fullword of each 16-byte entry contains the lowest message number within the

corresponding module; the second fullword contains the highest message number for that module. The last 8 bytes of each 16-byte entry contain the name of the message module to be loaded. For example, in Figure 85 on page 305, Japanese messages numbered 101–200 are found in module ZOGMSGJ2. Finally, each language table ends with a dummy 16-byte entry whose first two fullwords contain the flag `F'-1'` indicating the end of the language table.

Use an 8-character format for the title of the message module table: 'U' (to indicate that the table contains user-created messages), followed by a 3-character facility ID, followed by 'MSGT'. For example, the title of the message module table for messages using a facility ID of XMP would be 'UXMPMSGT' as shown in Figure 84 on page 305; the title of the message module table for messages having a facility ID of ZOG would be 'UZOGMSGT' as shown in Figure 85 on page 305.

After you create the message module table:

1. Assemble it into a loadable TEXT file using High Level Assembler.
2. Store the message module table in a library where it can be dynamically accessed while your routine is running.

Assigning values to message inserts

After you add message insert tags to the message source file, you can use the Language Environment callable service CEECMI to assign values to the inserts. Values do not need to be assigned to inserts in sequential order. For example, the value of insert 3 can be assigned before the value for insert 1. Before invoking the CEECMI callable service, assign values to the callable service parameters. For more information about CEECMI, see *z/OS Language Environment Programming Reference*.

Figure 86 on page 307 shows an example of the use of CEECMI to assign value 1234 to insert 1 for *:msgname.EXMPLMSG* shown in Figure 83 on page 296.

```
*PROCESS MACRO;
 TEST: Proc Options(Main);

 /*Module/File Name: IBMMINS          */

    %INCLUDE  CEEIBMAW;
    %INCLUDE  CEEIBMCT;

    %INCLUDE SYSLIB(EXMPLCOP);
    DECLARE INSERT    CHAR(255) VARYING  AUTO;
    DCL 01 CTOK,                    /* Feedback token */
           03 MsgSev    REAL FIXED BINARY(15,0),
           03 MsgNo     REAL FIXED BINARY(15,0),
           03 Flags,
              05 Case      BIT(2),
              05 Severity  BIT(3),
              05 Control   BIT(3),
           03 FacID     CHAR(3),    /* Facility ID */
           03 ISI                   /* Instance-Specific Information */
                        REAL FIXED BINARY(31,0);
    DCL 01 FBCODE,                  /* Feedback token */
           03 MsgSev    REAL FIXED BINARY(15,0),
           03 MsgNo     REAL FIXED BINARY(15,0),
           03 Flags,
              05 Case      BIT(2),
              05 Severity  BIT(3),
              05 Control   BIT(3),
           03 FacID     CHAR(3),    /* Facility ID */
           03 ISI                   /* Instance-Specific Information */
                        REAL FIXED BINARY(31,0);
    DECLARE MSGFILE   FIXED AUTO;

    ctok = EXMPLMSG;
    insert = '1234';
    MSGFILE = 2;

    /* Call CEECMI to create a message insert */
    CALL CEECMI(ctok, 1, insert, fbcode);

    /* Call CEEMSG to issue the message */
    CALL CEEMSG(ctok, MSGFILE, fbcode);

 END TEST;
```

Figure 86. Example of assigning values to message inserts

Interpreting runtime messages

Runtime messages are designed to provide information about conditions and possible solutions to errors that occur in your routine. Language Environment common routines and language-specific runtime routines issue runtime messages. All runtime messages in Language Environment are comprised of the following:

- A 3-character facility ID used by all messages generated under Language Environment or a particular Language Environment-conforming product. This prefix indicates the Language Environment component that generated the message, and is also the facility ID in the condition token. Language Environment uses the ID of the condition token to write the message associated with the condition to MSGFILE. For more information about the condition token, see Chapter 18, "Using condition tokens," on page 271.
- A message number that identifies the message associated with the condition.
- A severity level that indicates the severity of the condition that was raised.

The format of every runtime message is **FFF***nnnnx*

FFF
Represents the facility ID. In z/OS Language Environment, the possible facility IDs assigned by IBM are:
CEE Language Environment common library
EDC C language-specific library
FOR Fortran language-specific library
IGZ COBOL language-specific library
IBM PL/I language-specific library

nnnn
Represents the message number.

x Represents the severity code. This character indicates the level of severity (1, 2, 3, or 4) of the message.

Table 49 lists the severity codes, corresponding severity levels, explanations of the severity codes, and the default actions taken if conditions corresponding to each level of severity are unhandled.

Table 49. Language Environment runtime message severity codes

Severity code	Level of severity	Explanation	Default action if condition unhandled
I	0	An informational message (or, if the entire token is zero, no information).	No message issued.
W	1	A warning message; service completed, probably successfully.	No message issued, except in COBOL. Processing continues for all languages.
E	2	Error detected, correction attempted, service completed, perhaps successfully.	Issues message and terminates thread.
S	3	Severe error detected, service incomplete with possible side effects.	Issues message and terminates thread.
C	4	Critical error detected, service incomplete with condition signaled.	Issues message and terminates thread.

Language Environment messages can appear even though you made no explicit calls to Language Environment services. C, COBOL, and PL/I runtime library routines commonly use the Language Environment services, so you might receive Language Environment messages even when the application routine does not directly call Language Environment services.

Some Language Environment conditions have qualifying data associated with the instance specific information (ISI) for the condition. For more information about qualifying data, see “q_data structure for abends” on page 283.

Specifying national languages

You can use Language Environment national language support to view runtime messages in mixed- and uppercase U.S. English and in Japanese. You can also use national language support to select the most appropriate language variables for your messages, such as language character set, left-to-right text, single-byte character set (SBCS), and double-byte character set (DBCS).

Language Environment message services support requirements for national language support machine-readable information such as message formatting, message delivery, and normalization (removes the adjacent shift-out, shift-in character in order to make DBCS strings as compatible as possible).

The NATLANG runtime option allows you to set the national language used for messages before you run your routine. The default national language is mixed and uppercase U.S. English. See *z/OS Language Environment Programming Reference* for more information on the NATLANG runtime option.

The CEE3LNG callable service allows you to set or query the current national language setting while your routine is running. Refer to *z/OS Language Environment Programming Reference* for more information about CEE3LNG.

Runtime messages with POSIX

The POSIX(ON) runtime option changes both the facility ID and message number for some messages you might see with your C application. Messages that had the facility ID of EDC and ranged in number from 6000 through 6009 before running POSIX(ON) now have a facility ID of CEE and different message numbers.

Table 50 shows the conditions, their facility ID and message number for the different runtime environments. If your C application is coded to respond to specific facility IDs or specific message numbers for processing, then you must check for the proper values depending on the environment.

Table 50. Condition tokens with POSIX

Condition token	Facility ID with POSIX(ON)	Message number with POSIX(ON)	Facility ID with POSIX(OFF)	Message number with POSIX(OFF)
SIGFPE	CEE	5201	EDC	6000
SIGILL	CEE	5202	EDC	6001
SIGSEGV	CEE	5203	EDC	6002
SIGABND	CEE	5204	EDC	6003
SIGTERM	CEE	5205	EDC	6004
SIGINT	CEE	5206	EDC	6005
SIGABRT	CEE	5207	EDC	6006
SIGUSR1	CEE	5208	EDC	6007
SIGUSR2	CEE	5209	EDC	6008
SIGHUP	CEE	5210	na	na
SIGSTOP	CEE	5211	na	na
SIGKILL	CEE	5212	na	na
SIGPIPE	CEE	5213	na	na
SIGALRM	CEE	5214	na	na

Table 50. Condition tokens with POSIX (continued)

Condition token	Facility ID with POSIX(ON)	Message number with POSIX(ON)	Facility ID with POSIX(OFF)	Message number with POSIX(OFF)
SIGCONT	CEE	5215	na	na
SIGCHLD	CEE	5216	na	na
SIGTTIN	CEE	5217	na	na
SIGTTOU	CEE	5218	na	na
SIGIO	CEE	5219	na	na
SIGQUIT	CEE	5220	na	na
SIGTSTP	CEE	5221	na	na
SIGTRAP	CEE	5222	na	na
SIGIOERR	CEE	5223	EDC	6009
SIGDCE	CEE	5224	na	na
SIGPOLL	CEE	5225	na	na
SIGURG	CEE	5226	na	na
SIGBUS	CEE	5227	na	na
SIGSYS	CEE	5228	na	na
SIGWINCH	CEE	5229	na	na
SIGXCPU	CEE	5230	na	na
SIGXFSZ	CEE	5231	na	na
SIGVTALRM	CEE	5232	na	na
SIGPROF	CEE	5233	na	na
SIGDUMP	CEE	5234	na	na
SIGDANGER	CEE	5235	na	na
SIGTHSTOP	CEE	5236	na	na
SIGTHCONT	CEE	5237	na	na

Handling message output

The following topics provide information about directing message output and displaying messages under Language Environment, C, C++, COBOL, Fortran, and PL/I.

For information about handling message output in ILC applications, see *z/OS Language Environment Writing Interlanguage Communication Applications*.

Using Language Environment MSGFILE

Runtime messages are directed to a common Language Environment message file. You can use the MSGFILE runtime option to specify the ddname of this file. If a message file ddname is not declared, messages are written to the IBM-supplied default ddname SYSOUT.

The definitions of MSGFILE(SYSOUT) differ, depending on the operating system you use. Table 51 on page 311 lists the SYSOUT definitions and MSGFILE default attributes for MVS and TSO/E:

Table 51. Operating system, SYSOUT definitions, MSGFILE default attributes

Operating system	SYSOUT definition	MSGFILE default attributes
MVS	SYSOUT=*	LRECL 121, RECFM FBA
	The output is routed to the destination specified in the MSGCLASS option of the JOB card.	If not a terminal, BLKSIZE 121*100; if a terminal, BLKSIZE 121.
TSO/E	ALLOC DD(SYSOUT) DA(*)	LRECL 121, RECFM FBA, BLKSIZE 121

When you direct runtime messages to an I/O device, the method you should use also depends on the operating system. Table 52 lists methods for directing runtime messages to an I/O device under MVS and TSO/E, and provides references for additional information about this topic.

Table 52. Defining an I/O device for a ddname

Operating system	Method to define I/O device	For more information, see:
MVS	Specify the ddname of a data set in the JCL.	"Required DD Statements" in “Writing JCL for the link-edit process” on page 72
TSO/E	The ddname of the data set that you specify using the ALLOCATE command.	Chapter 6, “Creating and executing programs under TSO/E,” on page 83

Note:

1. You need to modify existing JCL of pre-Language Environment-conforming applications in order to define new ddnames for MSGFILE.
2. You can specify the same message file across nested enclaves. Language Environment coordinates the use of the same ddname across nested enclaves. If you specify different MSGFILE ddnames in each enclave, Language Environment honors each ddname.
3. The Language Environment MSGFILE can be allocated to a large format sequential data set.
4. Under CICS, the MSGFILE runtime option is ignored. All runtime messages are directed to a transient data queue named CESE rather than to the ddname specified in the MSGFILE option. For more information about message handling and runtime message output under CICS, see “Runtime output under CICS” on page 409.

Using MSGFILE under z/OS UNIX

To direct MSGFILE output to a z/OS UNIX file, use the PATH= keyword in the *ddname* parameter of MSGFILE to specify a ddname that nominates a z/OS UNIX file.

If your application is running in an address space created by using the `fork()` or `spawn()` functions or if it is invoked by one of the `exec` family of functions, the application has access to a DD card only if you dynamically allocate one. If the application can access a DD card, MSGFILE output is directed to that file. If the allocated DD card contains the PATH= keyword, Language Environment directs the MSGFILE output to the specified file in the z/OS UNIX file system.

If your application is running under z/OS UNIX, or under any environment that has file descriptor 2 (FD2) open, MSGFILE output is directed to whatever FD2 points to. Under the shell this is typically your terminal.

If FD2 does not exist but your application is either running in an address space created by the `fork()` or `spawn()` functions or invoked by one of the `exec` family of functions, MSGFILE output is directed to the current working directory; if that directory is the root directory, the output is written to a file in the directory `/tmp`. The name of the file is the name you specify with the MSGFILE runtime option, with the default of SYSOUT.

The resulting file name has the following format:

`/path/Fname.Date.Time.Pid`

path The current working directory (unless it is the working directory, in which case it is then `/tmp`).

Fname
The name specified in the FNAME parameter on the call to CEE3DMP (default is CEEDUMP).

Date The date the dump is taken, appearing in the format `YYYYMMDD` (such as 19940325 for March 25, 1994).

Time The time the dump is taken, appearing in the format `HHMMSS` (such as 175501 for 05:55:01 PM).

Pid The process ID the application is running in when the dump is taken.

Note: Language Environment cannot direct MSGFILE output to a z/OS UNIX file in a CICS environment.

Using C or C++ I/O functions

C and C++ make a distinction between types of error output, and whether the output is directed to the MSGFILE destination or to one of the standard stream output devices, `stderr` or `stdout`.

Runtime messages and `perror()` messages are directed to the `stderr` standard stream output device. The default destination for `stderr` output is the MSGFILE ddname; you can change this default as discussed below.

Message output issued by a call to the `printf()` function is directed to `stdout`. For TSO/E, stdout defaults to the terminal. When running batch (MVS, IMS, or TSO/E) or IMS online, stdout attempts by default to open one of several ddnames in the following order of precedence, which is made to open SYSOUT=* as a data set:

1. SYSPRINT
2. SYSTERM
3. SYSERR

You can change the destination of `printf()` output by redirection. For example, `1>&2` on the command line at routine invocation redirects `stdout` to the `stderr` destination.

Table 53 on page 313 lists the types of C/C++ output, the types of messages associated with them, and the destination of the message output.

Table 53. C and C++ message output

Type of output	Type of message	Produced by	Default destination
MSGFILE output	Language Environment messages (CEExxxx)	Language Environment unhandled conditions	MSGFILE ddname
	C library messages	C/C++ unhandled conditions (EDCxxxx)	MSGFILE ddname
`stderr` messages	`perror()` messages (EDCxxx)	Issued by a call to `perror()`	MSGFILE ddname
	User output sent explicitly to `stderr`	Issued by a call to `fprintf()`	MSGFILE ddname
`stdout` messages	User output sent explicitly to `stdout`	Issued by a call to `printf()`	`stdout`

You can control the destination of stderr and stdout output by using the Language Environment MSGFILE runtime option, the C `freopen()` function, or by invoking redirection services at run time.

Table 54 lists the possible destinations of redirected stderr and stdout standard stream output.

Table 54. C/C++ Redirected stream output

	stderr not redirected	stderr redirected to destination other than stdout	stderr redirected to stdout
stdout not redirected	`stdout` to itself	`stdout` to itself	Both to `stdout`
	`stderr` to MSGFILE	`stderr` to its other destination	
stdout redirected to destination other than stderr	`stdout` to its other destination	`stdout` to its other destination	Both to the other `stdout` destination
	`stderr` to MSGFILE	`stderr` to its other destination	
stdout redirected to stderr	Both to MSGFILE	Both to the other `stderr` destination	When `stderr` and `stdout` are redirected to each other (this is not recommended), output from both is directed to whichever was specified first.

For more information about redirecting standard streams in C or C++, see *z/OS XL C/C++ Programming Guide*.

Using COBOL I/O statements

Language Environment manages all COBOL output directed to the system-logical output device. This includes output from:

- DISPLAY SYSOUT
- READY TRACE (OS/VS COBOL only)
- EXHIBIT (OS/VS COBOL only)

Note: For OS/VS COBOL programs running under CICS, the DISPLAY, READY TRACE and EXHIBIT statements are not supported.

Non-CICS considerations

For COBOL programs, the DISPLAY statement sends output to MSGFILE(SYSOUT), the default ddname for the Language Environment message file. You can use the COBOL OUTDD compiler option to change the destination of DISPLAY output. The MVS data set to which the runtime messages are written depends on the combination of ddnames specified in the OUTDD compiler option and the MSGFILE runtime option.

If the ddname in OUTDD matches the ddname specified in the MSGFILE runtime option, the output is synchronized with the runtime messages and placed in the MVS data set designated by the MSGFILE runtime option.

If the ddname in OUTDD does not match the ddname specified in the MSGFILE runtime option, the output from the DISPLAY statement is directed to the OUTDD ddname destination.

If the file designated by MSGFILE has not been defined (associated with an I/O device) when the output is delivered, Language Environment dynamically allocates the file with ddname and attributes as shown in Table 51 on page 311.

If the file designated by OUTDD has not been defined when the output is delivered, Language Environment dynamically allocates the file with ddname and attributes as shown in Table 51 on page 311.

For more information about directing COBOL output, see the appropriate version of the COBOL programming guide in the COBOL library at Enterprise COBOL for z/OS library (http://www-01.ibm.com/support/docview.wss?uid=swg27036733).

CICS considerations

DISPLAY to the system-logical output device is supported under CICS for programs compiled with VS COBOL II, COBOL for MVS & VM, COBOL for OS/390 & VM, and Enterprise COBOL for z/OS. The DISPLAY output is written to the Language Environment message file (transient data queue CESE).

Using Fortran I/O statements

Under Language Environment, Fortran I/O statements formerly written to a Fortran error message unit (either directly or by default) are directed to a Language Environment message file specified by the MSGFILE runtime option. At program initialization, the Fortran error message unit is connected to the file specified by the MSGFILE runtime option.

The following types of output from Fortran programs are directed to the message file:

- Error messages that result from unhandled conditions
- Output produced by a sequential WRITE statement with a unit identifier having a value equal to the Fortran error message unit
- Output produced by a sequential WRITE statement with * as the unit identifier when the Fortran error message and the standard print unit are the same
- Output produced by a PRINT statement when the Fortran error message and the standard print unit are the same

- Printed output from the dump services (CDUMP, CPCUMP, DUMP, PDUMP, or SDUMP)

The message file can be either a named or unnamed file. To specify an unnamed file, code the MSGFILE runtime option as follows:

```
MSGFILE(FTeeF001)
```

The *ee* value is a two-character representation of the error message unit number that is specified in the ERRUNIT runtime option; the *ee* value cannot be any other number.

The default ddname of the Language Environment message file is SYSOUT. The ddname can be changed in a Fortran program by issuing an OPEN statement to connect to the error message unit with a different ddname in the FILE specifier. You can use a CLOSE statement to close the message file currently connected to the Fortran error message unit. In this case, the default message file as specified by the MSGFILE runtime option becomes the current message file. Any subsequent output messages are written to this message file after the CLOSE statement is issued. No subsequent OPEN statement is required.

For example, when the standard print unit is the same as the error message unit (unit 6 in Figure 87), all output from the PRINT statement is directed to the error message unit. When the MSGFILE(ONE) runtime option is in effect, the message file with ddname ONE is connected to the error message unit.

```
PRINT *, 'FILE ONE, RECORD 1'
PRINT *, 'FILE ONE, RECORD 2'
OPEN (6, FILE='TWO')
PRINT *, 'FILE TWO, RECORD 1'
PRINT *, 'FILE TWO, RECORD 2'
CLOSE (6)
PRINT *, 'FILE ONE, NEW RECORD 1'
PRINT *, 'FILE ONE, NEW RECORD 2'
```

Figure 87. Directing output messages

Figure 87 shows the first two records being written to the message file with the ddname ONE. The first OPEN statement closes file ONE and connects file TWO to the error message unit; two messages are written to it. The CLOSE statement closes file TWO and makes ONE the current message file. This occurs because the MSGFILE(ONE) runtime option is specified. The next PRINT statement connects file ONE to the error message unit, and two records are written to it. The message file is opened and the error message unit is connected automatically when an output message is issued.

The error message unit is restricted to sequential formatted output operations. Therefore, there are restrictions on the OPEN statement specifiers that can be used for the error message unit. Table 55 shows the valid OPEN statement specifiers and specifier values.

Table 55. Allowable OPEN statement specifiers

SPECIFIER=*spv*	**Default** *spv* **value**	**Additional allowable** *spv* **values**
STATUS=*sta*	UNKNOWN	None
ACCESS=*acc*	SEQUENTIAL	None

Table 55. Allowable OPEN statement specifiers (continued)

SPECIFIER=*spv*	**Default** *spv* **value**	**Additional allowable** *spv* **values**
CHAR=*chr*	DBCS	NODBCS can also be specified, but is ignored.
FORM=*frm*	FORMATTED	None
ACTION=*act*	WRITE	None
BLANK=*blk*	ZERO	NULL. BLANK has no meaning because the error message unit is used only for output.
PAD=*pad*	YES	NO. PAD has no meaning because the error message unit is used only for output.
POSITION=*ASIS*	ASIS	None
DELIM=*dlm*	Based on Fortran OPEN and CLOSE statements that refer to the error message unit.	APOSTROPHE, QUOTE, or NONE can be specified.
RECL=*rcl*	Maximum data length of a message file record.	Any positive value which does not exceed the maximum allowable length of the data in a message file record.

Using PL/I I/O statements

Runtime messages in PL/I routines are directed to the file specified by the Language Environment MSGFILE runtime option, instead of to the PL/I SYSPRINT STREAM PRINT file.

User-specified output is still directed to the PL/I SYSPRINT STREAM PRINT file by default. To direct this output to the Language Environment MSGFILE file, specify the runtime option MSGFILE(SYSPRINT).

When you use MSGFILE(SYSPRINT):

- Any file constant declaration that includes SYSPRINT STREAM PRINT file attributes is ignored.
- File attributes specified in the SYSPRINT DD card are used.
- If SYSPRINT DD is not present at first file reference, Language Environment dynamically allocates a file with IBM-supplied attributes. See Table 51 on page 311 for MSGFILE file default attributes.
- Any OPENs and CLOSEs to the PL/I SYSPRINT STREAM PRINT file are ignored.
- Synchronization between the types of output (messages and user-specified output) is not provided, so the order of the output is unpredictable.

MSGFILE considerations when using PL/I

If MSGFILE(SYSPRINT) is in effect, use SYSPRINT only to direct output to the PL/I SYSPRINT STREAM PRINT file.

Because performance is slower with the MSGFILE(SYSPRINT) option, it is recommended only for debugging purposes. For production applications, direct user-created output to the PL/I SYSPRINT STREAM PRINT file.

In a nested enclave environment, you can specify MSGFILE(SYSPRINT) for all enclaves in the application or only for those enclaves containing PUT statements. For batch, multiple enclaves in a Language Environment process can use the PL/I SYSPRINT STREAM PRINT. In this instance, you cannot open the file until it is referenced, and it is closed by Language Environment at process termination.

Under CICS, the MSGFILE runtime option is ignored. Both runtime messages and the SYSPRINT STREAM PRINT file output are directed to the CESE transient data queue. The CESE transient data queue is a CICS thread-level resource. See Chapter 25, “Running applications under CICS,” on page 397 for more information about the CESE transient data queue.

For more information about directing PL/I output, refer to IBM Enterprise PL/I for z/OS library (http://www.ibm.com/support/docview.wss?uid=swg27036735) .

Examples using multiple message handling callable services

The examples in this topic show how to use the Language Environment message and condition-handling services to issue a message that relates to a condition token. The same calls are illustrated in C/C++, PL/I, and COBOL.

Each example illustrates how CEEMOUT dispatches an informational message and uses CEENCOD to construct a token for the message. The message area is then initialized, CEEMGET retrieves the message, and CEEDCOD decodes the feedback token from CEEMGET. After all of the message has been retrieved, CEEMOUT issues the message. If any of the services fail, CEEMSG issues an informational error message.

C/C++ example calls to CEEMOUT, CEENCOD, CEEMGET, CEEDCOD, and CEEMSG

```
/*Module/File Name:  EDCMSGS  */
 /************************************************************
 **                                                          *
 **FUNCTION  : CEEMOUT - dispatch a message to message file  *
 **          : CEENCOD - construct a condition token         *
 **          : CEEMGET - retrieve, format and store a message*
 **          : CEEDCOD - decode an existing condition token  *
 **          : CEEMSG  - retrieve, format, and dispatch a    *
 **          :         - message to message file             *
 **                                                          *
 **   This example illustrates the invocation of the         *
 **   Language Environment message and condition handling    *
 **   services.                                              *
 **   It contructs a conditon token, retrieves the associated*
 **   message, and outputs the message to the message file.  *
 **                                                          *
 **   This example program outputs the Language Environment  *
 **   message,"CEE0260S".                                    *
 **                                                          *
 ************************************************************/
#include <string.h>
#include <stdio.h>
#include <leawi.h>
#include <stdlib.h>
#include <ceeedcct.h>


int main(void) {

  _VSTRING message;
```

Message examples

```
_INT4 dest,msgindx;
_CHAR80 msgarea;
_FEEDBACK fc,token;
_INT2 c_1,c_2,cond_case,sev,control;
_CHAR3 facid;
_INT4 isi;

printf ( "\n*********************************\n");
printf ( "\nCE92MSG C Example is now in motion\n");
printf ( "\n*********************************\n");

strcpy(message.string,"The following message, CEE0260S, is expected");
message.length = strlen(message.string);
dest = 2;

/************************************************************
 *   Call CEEMOUT to output informational message.          *
 *   Call CEEMSG to output error message if CEEMOUT fails.  *
 ************************************************************/

CEEMOUT(&message,&dest,&fc);

if ( _FBCHECK (fc , CEE000) != 0 ) {
   /* put the message if CEEMOUT failed */
   dest = 2;
   CEEMSG(&fc,&dest,NULL);
   exit(2999);
}/*****************************************
 * Construct a token for CEE message 0260.*
 *****************************************/
c_1 = 3;
c_2 = 260;
cond_case = 1;
sev = 3;
control = 1;
memcpy(facid,"CEE",3);
isi = 0;

CEENCOD(&c_1,&c_2,&cond_case,&sev,&control,
        facid,&isi,&token,&fc);
if ( _FBCHECK ( fc , CEE000 ) != 0 ) {
   printf("CEENCOD failed with message number %d\n",
          fc.tok_msgno);
   exit(2999);
}

/*****************************************
 * Initialize the message area.          *
 *****************************************/
msgindx = 0;
memset(msgarea,' ',79);
msgarea[80] = '\0';

/************************************************************
 * Use CEEMGET until all the message has been retrieved.    *
 * Msgindx will be zero when all the message has been retrieved.*
 * Call CEEMSG to output error message if CEEMGET fails.    *
 ************************************************************/
do {
   CEEMGET(&token,msgarea,&msgindx,&fc);

   if (fc.tok_sev > 1) {
      dest = 2;
      CEEMSG(&fc,&dest,NULL);
      exit(2999);
   }
   memcpy(message.string,msgarea,80);
```

```
    message.length = 80;
    dest = 2;

    CEEMOUT(&message,&dest,&fc);          /* put out the message */

    if ( _FBCHECK (fc , CEE000) != 0 ) {
       dest = 2;
       CEEMSG(&fc,&dest,NULL);
       exit(2999);
    }
  } while (msgindx != 0);
  printf ( "\n*********************************\n");
  printf ( "\nCE92MSG C Example is now ended    \n");
  printf ( "\n*********************************\n");
}
```

COBOL example calls to CEEMOUT, CEENCOD, CEEMGET, CEEDCOD, and CEEMSG

```
CBL LIB,QUOTE
      *Module/File Name: IGZTMSGS
      ************************************************************
      *                                                          *
      *  CE92MSG - Program to invoke the following LE services:  *
      *                                                          *
      *          : CEEMOUT - dispatch a message to message file  *
      *          : CEENCOD - construct a condition token         *
      *          : CEEMGET - retrieve, format and store a message *
      *          : CEEDCOD - decode an existing condition token  *
      *          : CEEMSG  - retrieve, format, and dispatch a    *
      *          :           message to message file             *
      *                                                          *
      * This example illustrates the invocation of the Language  *
      * Environment Message and Condition Handling services.     *
      * It contructs a condition token, retrieves the associated *
      * message, and outputs the message to the message file.    *
      *                                                          *
      * This example program will output the Language Environment *
      * message, "CEE0260S".                                     *
      *                                                          *
      ************************************************************
       IDENTIFICATION DIVISION.
       PROGRAM-ID. CE92MSG.
       DATA DIVISION.
       WORKING-STORAGE SECTION.
       01  MSGSTR.
           02  Vstring-length      PIC S9(4) BINARY.
           02  Vstring-text.
               03  Vstring-char        PIC X
                           OCCURS 0 TO 256 TIMES
                           DEPENDING ON Vstring-length
                              of MSGSTR.
       01  MSGDEST                 PIC S9(9) BINARY.
       01  SEV                     PIC S9(4) BINARY.
       01  MSGNO                   PIC S9(4) BINARY.
       01  CASE                    PIC S9(4) BINARY.
       01  SEV2                    PIC S9(4) BINARY.
       01  CNTRL                   PIC S9(4) BINARY.
       01  FACID                   PIC X(3).
       01  ISINFO                  PIC S9(9) BINARY.
       01  MSGINDX                 PIC S9(9) BINARY.
       01  CTOK.
           02  Condition-Token-Value.
           COPY  CEEIGZCT.
               03  Case-1-Condition-ID.
                   04  Severity    PIC S9(4) BINARY.
```

```
            04  Msg-No      PIC S9(4) BINARY.
        03  Case-2-Condition-ID
                  REDEFINES Case-1-Condition-ID.
            04  Class-Code  PIC S9(4) BINARY.
            04  Cause-Code  PIC S9(4) BINARY.
        03  Case-Sev-Ctl    PIC X.
        03  Facility-ID     PIC XXX.
    02  I-S-Info            PIC S9(9) BINARY.
01  FC.
    02  Condition-Token-Value.
    COPY  CEEIGZCT.
        03  Case-1-Condition-ID.
            04  Severity    PIC S9(4) BINARY.
            04  Msg-No      PIC S9(4) BINARY.
        03  Case-2-Condition-ID
                  REDEFINES Case-1-Condition-ID.
            04  Class-Code  PIC S9(4) BINARY.
            04  Cause-Code  PIC S9(4) BINARY.
        03  Case-Sev-Ctl    PIC X.
        03  Facility-ID     PIC XXX.
    02  I-S-Info            PIC S9(9) BINARY.
01  MGETFC.
    02  Condition-Token-Value.
    COPY  CEEIGZCT.
        03  Case-1-Condition-ID.
            04  Severity    PIC S9(4) BINARY.
            04  Msg-No      PIC S9(4) BINARY.
        03  Case-2-Condition-ID
                  REDEFINES Case-1-Condition-ID.
            04  Class-Code  PIC S9(4) BINARY.
            04  Cause-Code  PIC S9(4) BINARY.
        03  Case-Sev-Ctl    PIC X.
        03  Facility-ID     PIC XXX.
    02  I-S-Info            PIC S9(9) BINARY.
01  MSGAREA                 PIC X(80).
PROCEDURE DIVISION.
0001-BEGIN-PROCESSING.
    DISPLAY "************************************".
    DISPLAY "CE92MSG COBOL Example is now in motion. ".
    DISPLAY "************************************".
    MOVE 80 TO Vstring-length of MSGSTR.
    MOVE "The following error message, CEE0260S, is expected:"
           TO Vstring-text of MSGSTR.
    MOVE 2 TO MSGDEST.
*****************************************************************
**   Call CEEMOUT to put out informational message.          **
*****************************************************************
    CALL "CEEMOUT" USING MSGSTR , MSGDEST , FC.
    IF NOT CEE000 of FC  THEN
        DISPLAY "Error " Msg-No of FC
           " in issuing header message"
        STOP RUN
    END-IF.
*****************************************************************
**   Set up token fields for creation of a condition token  **
*****************************************************************
    MOVE   3 TO SEV.
    MOVE 260 TO MSGNO.
    MOVE   1 TO CASE.
    MOVE   3 TO SEV2.
    MOVE   1 TO CNTRL.
    MOVE "CEE" TO FACID.
    MOVE   0 TO ISINFO.
*****************************************************************
**   Call CEENCOD to construct a condition token            **
*****************************************************************
    CALL "CEENCOD" USING SEV, MSGNO, CASE, SEV2, CNTRL,
```

```
         FACID, ISINFO, CTOK, FC.          IF CEE000 of FC THEN
         MOVE 0 TO MSGINDX
         MOVE SPACES TO MSGAREA
*************************************************************
**       Call CEEMGET to retrieve message 260. Since       **
**       message 260 is longer than the length of MSGAREA, **
**       a PERFORM statement loop is used to call CEEMGET  **
**       multiple times until the message index is zero.   **
*************************************************************
         PERFORM TEST AFTER UNTIL( MSGINDX = 0 )
             CALL "CEEMGET" USING CTOK, MSGAREA, MSGINDX, MGETFC
             IF (MGETFC NOT = LOW-VALUE) THEN
*************************************************************
*           Call CEEDCOD to decode CEEMGET's feedback token **
*************************************************************
                 CALL "CEEDCOD" USING MGETFC, SEV, MSGNO,
                     CASE, SEV2, CNTRL, FACID, ISINFO, FC
                 IF NOT CEE000 of FC  THEN
*************************************************************
*           Call CEEMSG to output LE error message          **
*           using feedback code from CEEDCOD call.          **
*************************************************************
                     CALL "CEEMSG" USING MGETFC, MSGDEST, FC
                     IF NOT CEE000 of FC THEN
                         DISPLAY "Error " Msg-No of FC
                         " from CEEMSG after error in CEEDCOD"
                     END-IF
                     STOP RUN
                 END-IF
*************************************************************
*                If decoded message number is not 455,      **
*                then CEEMGET actually failed with error.   **
*************************************************************
                 IF ( Msg-No of MGETFC NOT = 455) THEN
                     DISPLAY "Error " Msg-No of MGETFC
                         " retrieving message CEE0260S"
                     STOP RUN
                 END-IF
             END-IF
*************************************************************
*       Call CEEMOUT to output earch portion of message 260 **
*************************************************************
             MOVE MSGAREA TO Vstring-text of MSGSTR
             CALL "CEEMOUT" USING MSGSTR , MSGDEST , FC
             IF (MSGINDX = ZERO) THEN
                 DISPLAY "************************************"
                 DISPLAY " COBOL message example program ended."
                 DISPLAY "************************************"
             END-IF
         END-PERFORM
     ELSE
         DISPLAY "Error " Msg-No of FC
            " in encoding condition token"
         STOP RUN
     END-IF.

     GOBACK.
```

PL/I example calls to CEEMOUT, CEENCOD, CEEMGET, CEEDCOD, and CEEMSG

```
*PROCESS MACRO;
    /*Module/File Name: IBMMSGS                                 */
 CE92MSG: PROC OPTIONS(MAIN);

    %INCLUDE  CEEIBMAW;
```

Message examples

```
%INCLUDE  CEEIBMCT;

/************************************************************/
/*                                                          */
/* FUNCTION : CEEMOUT - dispatch a message to message file  */
/*          : CEENCOD - construct a condition token         */
/*          : CEEMGET - retrieve, format and store a message */
/*          : CEEDCOD - decode an existing condition token  */
/*          : CEEMSG  - retrieve, format, and dispatch a    */
/*                      message to message file             */
/*                                                          */
/*   This example illustrates the invocation of the Language */
/*   Environment message and condition handling services.   */
/*   It contructs a conditon token, retrieves the associated */
/*   message, and outputs the message to the message file.  */
/*                                                          */
/*   This example program outputs the Language Environment  */
/*   message, "CEE0260S"                                    */
/*                                                          */
/************************************************************/
DCL MSGSTR    CHAR(255) VARYING;
DCL MSGDEST   REAL FIXED BINARY(31,0);
DCL MSGNUM    REAL FIXED BINARY(15,0);
DCL CASE      REAL FIXED BINARY(15,0);
DCL SEV       REAL FIXED BINARY(15,0);
DCL SEV2      REAL FIXED BINARY(15,0);
DCL CNTRL     REAL FIXED BINARY(15,0);
DCL FACID     CHARACTER ( 3 );
DCL ISINFO    REAL FIXED BINARY(31,0);
DCL MSGINDX   REAL FIXED BINARY(31,0);
DCL 01 CTOK,                    /* Feedback token */
       03 MsgSev    REAL FIXED BINARY(15,0),
       03 MsgNo     REAL FIXED BINARY(15,0),
       03 Flags,
          05 Case      BIT(2),
          05 Severity  BIT(3),
          05 Control   BIT(3),
       03 FacID     CHAR(3),    /* Facility ID */
       03 ISI                   /* Instance-Specific Information */
                    REAL FIXED BINARY(31,0);
DCL 01 FC,                      /* Feedback token */
       03 MsgSev    REAL FIXED BINARY(15,0),
       03 MsgNo     REAL FIXED BINARY(15,0),
       03 Flags,
          05 Case      BIT(2),
          05 Severity  BIT(3),
          05 Control   BIT(3),
       03 FacID     CHAR(3),    /* Facility ID */
       03 ISI                   /* Instance-Specific Information */
                    REAL FIXED BINARY(31,0);    DCL 01 MGETFC,
/* Feedback token */
       03 MsgSev    REAL FIXED BINARY(15,0),
       03 MsgNo     REAL FIXED BINARY(15,0),
       03 Flags,
          05 Case      BIT(2),
          05 Severity  BIT(3),
          05 Control   BIT(3),
       03 FacID     CHAR(3),    /* Facility ID */
       03 ISI                   /* Instance-Specific Information */
                    REAL FIXED BINARY(31,0);
DCL MSGAREA   CHAR(80);

PUT SKIP LIST('PL/I message example is now in motion');
MSGSTR = 'The following message, CEE0260S, is expected';
MSGDEST = 2;
/************************************************************/
/*   Call CEEMOUT to output informational message.          */
```

```
      /*   Call CEEMSG to output error message if CEEMOUT fails.   */
      /*************************************************************/
      CALL CEEMOUT ( MSGSTR, MSGDEST, FC );
      IF  ¬ FBCHECK( FC, CEE000 )  THEN
         CALL CEEMSG( FC, MSGDEST, MGETFC );
      /*************************************************************/
      /*   Set up token fields for creation of a condition token   */
      /*************************************************************/
      SEV = 3;
      MSGNUM = 260;
      CASE = 1;
      SEV2 = 3;
      CNTRL = 1;
      FACID = 'CEE';
      ISINFO = 0;
      /*************************************************************/
      /*   Call CEENCOD to construct a condition token             */
      /*************************************************************/
      CALL CEENCOD ( SEV, MSGNUM, CASE, SEV2, CNTRL, FACID,
         ISINFO, CTOK, FC );
      IF  FBCHECK( FC, CEE000)   THEN  DO;
         MSGINDX = 0;
         MSGAREA = ' ';
         /*********************************************************/
         /* Call CEEMGET to retrieve message 260. Since           */
         /* message 260 is longer than the length of MSGAREA,     */
         /* a DO UNTIL statement loop is used to call CEEMGET     */
         /* multiple times until the message index is zero.       */
         /*********************************************************/
Retrieve_Message:
         DO UNTIL( MSGINDX = 0 );
            CALL CEEMGET ( CTOK, MSGAREA, MSGINDX, MGETFC );
            IF  ¬ FBCHECK( MGETFC, CEE000)  THEN  DO;
               /*****************************************************/
               /*Call CEEDCOD to decode CEEMGET's feedback token   */
               /*****************************************************/
               CALL CEEDCOD ( MGETFC, SEV, MSGNUM,
                  CASE, SEV2, CNTRL, FACID, ISINFO, FC );
               IF  ¬ FBCHECK( FC, CEE000)  THEN  DO;
                  /**************************************************/
                  /* Call CEEMSG to output the error message       */
                  /* associated with feedback token from CEEMGET.  */
                  /**************************************************/
                  CALL CEEMSG  ( MGETFC, MSGDEST, FC );
                  IF  ¬ FBCHECK( FC, CEE000)  THEN  DO;
                     PUT SKIP LIST ('Error ' || FC.MsgNo
                        || ' from CEEMSG');
                     STOP;
                     END;
                  /**************************************************/
                  /* If decoded message number is not 455,         */
                  /* then CEEMGET actually failed with error.      */
                  /**************************************************/
                  IF ( MGETFC.MsgNo ¬= 455)  THEN  DO;
                     PUT SKIP LIST( 'Error ' || MGETFC.MsgNo
                           || ' retrieving message CEE0260S');
                     STOP;
                     END;
                  END;
               END;
            /*****************************************************/
            /* Call CEEMOUT to output each portion of message 260  */
            /*****************************************************/
            MSGSTR = MSGAREA;
            CALL CEEMOUT ( MSGSTR, MSGDEST, FC );
            IF (MSGINDX = 0) THEN  DO;
               PUT SKIP LIST ('********************************');
```

```
            PUT SKIP LIST ('PL/I message example program ended');
            PUT SKIP LIST ('**********************************');
            END;
         END Retrieve_Message /* END DO UNTIL MSGINDX = 0 */;
      END /* CEENCOD successful */;
   ELSE  DO;
      PUT SKIP LIST ('Error ' || FC.MsgNo
         || ' in encoding condition token');
      END;

END CE92MSG;
```

Chapter 20. Using date and time services

This topic describes Language Environment date and time services and includes examples showing calls to those services.

The basics of using date and time services

Language Environment includes a complete set of callable services that help HLLs perform date and time calculations. You can use these services to read, calculate, and write values representing the date and time. Language Environment offers unique pattern-matching capabilities that let you process almost any date and time format contained in an input record or produced by operating system services.

You can use date and time services to:

- Format date and time values by country code
- Format date and time values using customized formats
- Parse date values and time values
- Convert between Gregorian, Julian, Asian, and Lilian formats
- Calculate days between dates
- Calculate elapsed time to the nearest millisecond
- Get local time and *Greenwich Mean Time* (GMT) from the system without a *supervisor call* (SVC) overhead
- Properly handle 2-digit years in the year 2000

All Language Environment date and time services are enabled for national language support, including full DBCS support for the Japanese Emperor era .For more information about national language support, see Chapter 21, “National language support,” on page 355.

All Language Environment date and time services are based on the Gregorian calendar, with Lilian limits as described in “Date limits” on page 326.

Related services

Callable services

CEECBLDY
Converts character date value to the COBOL Integer format. Day one is 01 January 1601 and the value is incremented by one for each subsequent day. This service is similar to CEEDAYS, except that it provides an answer in COBOL Integer format, so that it is compatible with ANSI COBOL intrinsic functions. It should not be used with other Language Environment date or time services.

CEEDATE
Converts dates in the Lilian format to character values

CEEDATM
Converts number of seconds to character timestamp

CEEDAYS
Converts character date values to the Lilian format. Day one is 15 October 1582, and the value is incremented by one for each subsequent day.

© Copyright IBM Corp. 1991, 2015

CEEDYWK
Provides day of week calculation

CEEGMT
Gets current Greenwich Mean Time (date and time)

CEEGMTO
Gets difference between Greenwich Mean Time and local time

CEEISEC
Converts binary year, month, day, hour, minute, second, and millisecond to a number representing the number of seconds since 00:00:00 14 October 1582

CEELOCT
Gets current date and time

CEEQCEN
Queries the century window

CEESCEN
Sets the century window

CEESECI
Converts a number representing the number of seconds since 00:00:00 14 October 1582 to seven separate binary integers representing year, month, day, hour, minute, second, and millisecond

CEESECS
Converts character timestamps (a date and time) to the number of seconds since 00:00:00 14 October 1582

CEEUTC
Same as CEEGMT

See *z/OS Language Environment Programming Reference* for syntax and examples of these callable services.

Working with date and time services

Before you can start working with date and time services, you need to know the various formats for specifying date and times and any limits that exist.

Date limits

All Language Environment date and time services are based on the Gregorian calendar, which has certain limits for the date variables. These limits are:

Starting Lilian Date
The beginning of the valid Lilian date range (day one) is Friday, 15 October 1582, the date the Gregorian calendar was adopted. Lilian dates preceding this date are undefined. In the Lilian date range:

- Day zero equals 00:00:00 14 October 1582.
- Day one equals 00:00:00 15 October 1582.

All valid Lilian dates must be after 00:00:00 15 October 1582.

Starting COBOL Integer Date (ANSI COBOL Intrinsic Functions)
The beginning of the COBOL Integer date range according to the COBOL standard is 31 December 1600. COBOL Integer dates preceding this date are undefined. In the COBOL Integer date range:

- Day zero equals 00:00:00 31 December 1600.

- Day one equals 00:00:00 01 January 1601.

All valid COBOL Integer dates must be after 00:00:00 01 January 1601.

COBOL has a compiler option, INTDATE, that allows you to get and use Lilian integer dates with COBOL Intrinsic Functions or to use the ANSI starting dates. Use INTDATE(LILIAN) if you want to pass integer dates between programs of different languages and use both Intrinsic Functions and Language Environment callable services to process the integer dates.

End Lilian Date (End COBOL Integer Date)
The end of the Lilian date range, as well as the COBOL Integer date range, is set to 31 December 9999. Lilian dates and COBOL Integer dates following this date are undefined.

Limit of Current Era
The maximum future date you can express in an era system must be within the first 999 years of the current era. Future dates past year 999 of the current era are undefined.

Picture character terms and picture strings

Picture character terms define the format of date and time fields. A picture string is a template that indicates the format of the input data. For example, the format of the date 06/16/1990 (where 06 is the month, 16 is the day, and 1990 is the year) corresponds to the picture string MM/DD/YYYY. See *z/OS Language Environment Programming Reference* for the Language Environment picture character term and picture string values.

Notation for eras

Calendars based on eras use unique picture strings to identify the eras. The era picture string begins with a less than character (<) and ends with the greater than character (>). The characters between the less than and greater than characters are the era name in DBCS characters.

Japanese Era
The six-character string <JJJJ>. An example of specifying the Japanese Meiji era would be to specify `X'0E45A645840F'` where the X'0E' and X'0F' are the less than character (<) and greater than character (>), respectively. Refer to *z/OS Language Environment Programming Reference* for the Japanese eras used by Language Environment date and time services.

Performing calculations on date and time values

Language Environment stores a date as a fullword binary integer and a timestamp as a doubleword floating-point value. You can use these formats to perform arithmetic calculations on date and time values, instead of writing special subroutines to do so. Figure 88 on page 328 is an example of how you can use Language Environment date and time services to convert a date to a different format and perform a simple calculation on the formatted date.

In this example, the number of years of service for an employee is determined using the original date of hire in the format YYMMDD to make the calculations. The example calculates the total number of years of service for an employee by first calling CEEDAYS to convert the days to Lilian and by then calling CEELOCT (Get Current Local Time) to get the current local time. Then, *doh_Lilian* is subtracted from *today_Lilian* (the number of days from the beginning of the Gregorian calendar to the current local time) to calculate the employee's total

number of days of employment. The final calculation divides that number by 365.25 to get the number of service years.

```
CALL CEEDAYS (date_of_hire, 'YYMMDD', doh_lilian, fc)
CALL CEELOCT (today_Lilian, today_seconds, today_Gregorian, fc)
service_days = today_Lilian - doh_Lilian
service_years = service_days / 365.25
```

Figure 88. Performing calculations on dates

The valid Lilian date range is 15 October 1582 to 31 December 9999. However, COBOL intrinsic functions uses the COBOL Integer date 01 January 1601 as day one. Language Environment provides the CEECBLDY callable service to allow you to work with the COBOL Integer date format. See *z/OS Language Environment Programming Reference* for more information about the CEECBLDY service.

Century window routines

To process 2-digit years in the year 2000 and beyond, Language Environment employs a sliding scheme called a *century window* where all 2-digit years lie within a 100-year interval. The default century window for Language Environment is set to start 80 years before the current system date. In the following example, 1993 is the current system date. The century window spans one hundred years from 1913 to 2012 where years 13 through 99 are recognized as 1913-1999 and years 00 through 12 are recognized as 2000-2012.

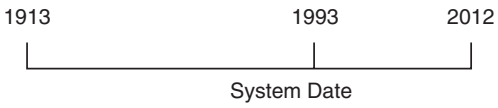

Figure 89. Default century window

In 1994, years 14 through 99 are recognized as 1914-1999, and years 00 through 13 are recognized as 2000-2013. By year 2080, all 2-digit years would be recognized as 20*xx*. In 2081, 00 would be recognized as year 2100.

Some applications might need to set up a different 100-year interval. For example, banks often deal with 30-year bonds, which could be due 01/31/20. You can use the CEESCEN callable service (see *z/OS Language Environment Programming Reference*) to change the century window. For example, the following statement sets the default century to the 100-year interval starting 30 years before the system date, instead of the Language Environment default of 80 years:

```
Call CEESCEN(30, fc)
```

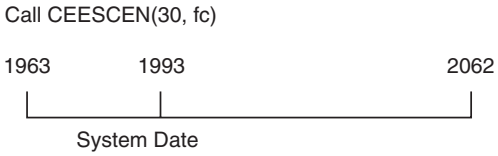

Figure 90. Using CEESCEN to change the century window

A companion service, CEEQCEN, queries the current century window. A subroutine can, for example, use a different interval for date processing than the parent routine. Before returning, the subroutine resets the interval back to its previous value. For more information about changing the century window, see "Examples illustrating calls to CEEQCEN and CEESCEN."

National Language Support for date and time services

The NATLANG and COUNTRY runtime options provide national language support for date and time services. The names of the months and days of the week are based on the national language specified in the NATLANG option. Some date and time services also allow the specification of a blank or null picture string, a practice that directs Language Environment to use a date and time format based upon the current value specified in the COUNTRY option. You can locate the default date and time format for any supported country by using the CEEFMDA, CEEFMDT, or CEEFMTM callable services.

Examples using date and time callable services

The examples in this topic illustrate some of the date conversion and manipulation you can perform by using the Language Environment date and time services together. There are examples for the following services:

CEEQCEN
Queries the century window. See "Examples illustrating calls to CEEQCEN and CEESCEN."

CEESCEN
Sets the century window. See "Examples illustrating calls to CEEQCEN and CEESCEN."

CEESECS
Converts timestamp to seconds. See "Examples illustrating calls to CEESECS" on page 332.

CEESECS and CEEDATM
Converts timestamp to seconds and builds a new timestamp. See "Examples illustrating calls to CEESECS and CEEDATM" on page 336.

CEESECS, CEESECI, CEEISEC, and CEEDATM
Converts timestamp to seconds, convert seconds to date and time components, convert date and time to seconds, and build new timestamp (see "Examples illustrating calls to CEESECS, CEESECI, CEEISEC, and CEEDATM" on page 340)

CEEDAYS, CEEDYWK, and CEEDATE
Converts a date to a Lilian date, converts Lilian date to calendar format, and returns day of week for the derived Lilian date. See "Examples illustrating calls to CEEDAYS, CEEDATE, and CEEDYWK" on page 346.

CEECBLDY
Converts a date to a COBOL Integer date that is compatible with ANSI COBOL intrinsic functions. See "Calls to CEECBLDY in COBOL" on page 352.

Examples illustrating calls to CEEQCEN and CEESCEN

The following topicscontain examples to illustrate how to query the current century window and how to set a new window with a new default of 30 years.

Calls to CEEQCEN and CEESCEN in C or C++

```
/*Module/File Name:  EDCCWIN  */
/*********************************************************************/
/* Demonstrates how to use CEEQCEN and CEESCEN to query and        */
/* set the century window.                                           */
/*********************************************************************/

#include <string.h>
#include <stdlib.h>
#include <stdio.h>
#include <leawi.h>
#include <ceeedcct.h>

int main (void) {

_INT4 oldcen, tempcen;
_FEEDBACK qcenfc,scenfc;

/* Call CEEQCEN to retrieve and save current century window  */
  CEEQCEN ( &oldcen , &qcenfc );
  if ( _FBCHECK ( qcenfc , CEE000 ) != 0 ) {
     printf("CEEQCEN failed with message number %d\n",
            qcenfc.tok_msgno);
     exit(1999);
  }

 /* Call CEESCEN to temporarily change century window to 30  */
  tempcen = 30;
  CEESCEN ( &tempcen , &scenfc );
  if ( _FBCHECK ( scenfc , CEE000 ) != 0 ) {
    printf(
    "CEESCEN (1st call) failed with message number %d\n",
           scenfc.tok_msgno);
    exit(2999);
  }

/* Perform date processing with 2-digit years...             */
.
.
.
 /* Call CEESCEN again to reset century window               */
  CEESCEN ( &oldcen , &scenfc );
  if ( _FBCHECK ( scenfc , CEE000 ) != 0 ) {
    printf(
    "CEESCEN (2nd call) failed with message number %d\n",
           scenfc.tok_msgno);
    exit(3999);
  }
  exit (0);
}
```

Calls to CEEQCEN and CEESCEN in COBOL

```
CBL LIB,QUOTE
      *Module/File Name: IGZTCWIN
      ****************************************************************
      * Demonstrates how to use CEEQCEN and CEESCEN to query         *
      * and set the century window.                                  *
      ****************************************************************
       IDENTIFICATION DIVISION.
       PROGRAM-ID.  CBCENTW.
       DATA DIVISION.
       WORKING-STORAGE SECTION.
       77  OLDCEN   PIC S9(9) BINARY.
       77  TEMPCEN  PIC S9(9) BINARY.
       01  FC.
           02  Condition-Token-Value.
           COPY  CEEIGZCT.
               03  Case-1-Condition-ID.
```

```
                04  Severity        PIC S9(4) BINARY.
                04  Msg-No          PIC S9(4) BINARY.
            03  Case-2-Condition-ID
                      REDEFINES Case-1-Condition-ID.
                04  Class-Code      PIC S9(4) BINARY.
                04  Cause-Code      PIC S9(4) BINARY.
            03  Case-Sev-Ctl    PIC X.
            03  Facility-ID     PIC XXX.
        02  I-S-Info        PIC S9(9) BINARY.
     PROCEDURE DIVISION.
    ************************************************************
    ** Call CEEQCEN to retrieve and save current century window **
    ************************************************************
         CALL "CEEQCEN" USING OLDCEN , FC.
         IF NOT CEE000 of FC  THEN
            DISPLAY "CEEQCEN failed with msg "
                 Msg-No of FC UPON CONSOLE
            STOP RUN
         END-IF.
    ************************************************************
    ** Call CEESCEN to temporarily change century window to 30  **
    ************************************************************
         MOVE 30 TO TEMPCEN.
         CALL "CEESCEN" USING TEMPCEN , FC.
         IF NOT CEE000 of FC  THEN
            DISPLAY "First call to CEESCEN failed with msg "
                Msg-No of FC UPON CONSOLE
            STOP RUN
         END-IF.

    ** Perform date processing with 2-digit years...

.
.
.
            ** Call CEESCEN again to reset century window

         CALL "CEESCEN" USING OLDCEN , FC.
         IF NOT CEE000 of FC  THEN
            DISPLAY "Second call to CEESCEN failed with msg "
               Msg-No of FC UPON CONSOLE
            STOP RUN
         END-IF.
         GOBACK.
```

Calls to CEEQCEN and CEESCEN in PL/I

```
*PROCESS MACRO;
 /*Module/File Name: IBMCWIN                          */
 /*****************************************************/
 /*                                                   */
 /* Demonstrates how to use CEEQCEN and               */
 /* CEESCEN to query and set the century window.      */
 /*                                                   */
 /*****************************************************/
 PLCENTW: PROC OPTIONS (MAIN);

    %INCLUDE  CEEIBMAW;
    %INCLUDE  CEEIBMCT;

    DCL OLDCEN  REAL FIXED BINARY(31,0);
    DCL TEMPCEN REAL FIXED BINARY(31,0);
    DCL 01 FC,                      /* Feedback token */
           03 MsgSev    REAL FIXED BINARY(15,0),
           03 MsgNo     REAL FIXED BINARY(15,0),
           03 Flags,
              05 Case      BIT(2),
              05 Severity  BIT(3),
              05 Control   BIT(3),
```

```
          03 FacID     CHAR(3),    /* Facility ID */
          03 ISI                   /* Instance-Specific Information */
                      REAL FIXED BINARY(31,0);
    /* Call CEEQCEN to retrieve and save current century window  */
    CALL CEEQCEN (OLDCEN, FC);
    IF ^ FBCHECK( FC, CEE000)  THEN  DO;
       DISPLAY( 'CEEQCEN failed with msg '|| FC.MsgNo );
       STOP;
       END;
    /* Call CEESCEN to temporarily change century window to 30  */
    TEMPCEN = 30;
    CALL CEESCEN (TEMPCEN, FC);
    IF ^ FBCHECK( FC, CEE000)  THEN  DO;
       DISPLAY( 'First call to CEESCEN failed with msg '
          || FC.MsgNo );
       STOP;
       END;

    /* Perform date processing with 2-digit years...            */

.
.
.
    /* Call CEESCEN again to reset century window               */
    CALL CEESCEN (OLDCEN, FC);
    IF ^ FBCHECK( FC, CEE000)  THEN  DO;
       DISPLAY( 'Second call to CEESCEN failed with msg '
          || FC.MsgNo );
       STOP;
       END;

 END PLCENTW;
```

Examples illustrating calls to CEESECS

The following examples illustrate calls to CEESECS to compute the total number of hours between two timestamps.

Calls to CEESECS in C or C++

```
/*Module/File Name:  EDCDT1   */
 /************************************************************/
 /*                                                          */
 /*Function       : CEESECS - convert timestamp to seconds*/
 /*                                                          */
 /*This example calls the LE CEESECS callable service     */
 /* to compute the hour number of numbers between the     */
 /* timestamps 11/02/92 05:22 and 11/02/92 17:22. The     */
 /* program responds that 36 hours has elapsed.           */
 /************************************************************/
#include <stdio.h>
#include <string.h>
#include <leawi.h>
#include <ceeedcct.h>
main ()
{
  _VSTRING StartTime;
  _VSTRING EndTime;
  _VSTRING  picstr;
  _FLOAT8 Start_Secs;
  _FLOAT8 End_Secs;
  _FLOAT8 Elapsed_Time;
  _FEEDBACK FC;
  _INT4 dest=2;
  /*****************************************************************
   The date picstr must be set to match the timestamp format.
   *****************************************************************/
   strncpy (picstr.string,"MM/DD/YY HH:MI",14);
   picstr.length = 14;
```

```
   strncpy(StartTime.string,"11/02/92 05:22",14);
   StartTime.length = 14;
   strncpy(EndTime.string,"11/03/92 17:22",14);
   EndTime.length = 14;

  /*************************************************************
   CEESECS takes the start time and returns
   a double-precision Lilian seconds tally in Start_Secs.
   *************************************************************/
   CEESECS ( &StartTime, &picstr , &Start_Secs , &FC );
   if ( _FBCHECK (FC , CEE000) == 0 )
   {
  /*************************************************************
   CEESECS takes the end time and returns
   a double-precision Lilian seconds tally in End_Secs.
   *************************************************************/
     CEESECS ( &EndTime, &picstr , &End_Secs , &FC );
     if ( _FBCHECK (FC , CEE000) == 0 )
     {
       Elapsed_Time = (End_Secs - Start_Secs)/3600.0;
       printf("%4.2f hours have elapsed between %s and %s.\n",
           Elapsed_Time, StartTime.string, EndTime.string);
     }
     else
     {
       printf ( "Error converting TimeStamp to seconds.\n" );
       CEEMSG(&FC, &dest, NULL);
     }
   }
   else
   {
    printf ( "Error converting TimeStamp to seconds.\n" );
    CEEMSG(&FC, &dest, NULL);
   }
}
```

Calls to CEESECS in COBOL

```
CBL LIB,QUOTE
      *Module/File Name: IGZTDT1
      ************************************************************
      **                                                        **
      ** CEE78DAT - Call CEESECS to convert timestamp to       **
      **            seconds                                     **
      **                                                        **
      ** This example calls the LE CEESECS callable            **
      **  service to compute the number of hours between       **
      **  the timestamps 11/02/92 05:22 and 11/02/92 17:22.    **
      **  The program responds that 36 hours has elapsed.      **
      **                                                        **
      ************************************************************
       IDENTIFICATION DIVISION.
       PROGRAM-ID. CE78DAT.
       DATA DIVISION.
       WORKING-STORAGE SECTION.
      *  Double precision is needed for the seconds results
       01  START-SECS              COMP-2.
       01  END-SECS                COMP-2.
       01  EOF-SWITCH              PIC X VALUE "N".
           88  EOF                 VALUE "Y".
       01  FC.
           02  Condition-Token-Value.
           COPY  CEEIGZCT.
               03  Case-1-Condition-ID.
                   04  Severity        PIC S9(4) BINARY.
                   04  Msg-No          PIC S9(4) BINARY.
               03  Case-2-Condition-ID
```

```
                  REDEFINES Case-1-Condition-ID.
              04  Class-Code      PIC S9(4) BINARY.
              04  Cause-Code      PIC S9(4) BINARY.
          03  Case-Sev-Ctl    PIC X.
          03  Facility-ID     PIC XXX.
      02  I-S-Info        PIC S9(9) BINARY.
  01  PICSTR.
      02  Vstring-length      PIC S9(4) BINARY.
      02  Vstring-text.
          03  Vstring-char        PIC X
                      OCCURS 0 TO 256 TIMES
                      DEPENDING ON Vstring-length
                         of PICSTR.
  01  START-TIME.
      02  Vstring-length      PIC S9(4) BINARY.
      02  Vstring-text.
          03  Vstring-char        PIC X
                      OCCURS 0 TO 256 TIMES
                      DEPENDING ON Vstring-length
                         of START-TIME.
  01  END-TIME.
      02  Vstring-length      PIC S9(4) BINARY.
      02  Vstring-text.
          03  Vstring-char        PIC X
                      OCCURS 0 TO 256 TIMES
                      DEPENDING ON Vstring-length
                         of END-TIME.
  01  INPUT-VARIABLES.
      05  ELAPSED-TIME        PIC S9(5)V99 PACKED-DECIMAL.
      05  ELAPSED-TIME-OUT    PIC +Z(4)9.99.

  PROCEDURE DIVISION.

  0001-BEGIN-PROCESSING.
      MOVE  14 TO Vstring-length of PICSTR.
      MOVE "MM/DD/YY HH:MI" TO Vstring-text of PICSTR.
      MOVE  14 TO Vstring-length of START-TIME.
      MOVE "11/02/92 05:22" TO Vstring-text of START-TIME.
      MOVE  14 TO Vstring-length of END-TIME.
      MOVE "11/03/92 17:22" TO Vstring-text of END-TIME.
*     ********************************************************
*     * CEESECS takes the timestamp START-TIME and returns a  *
*     * double-precision Lilian seconds tally in START-SECS.  *
*     ********************************************************
      CALL "CEESECS" USING START-TIME, PICSTR, START-SECS, FC
      IF CEE000 of FC THEN
*         ********************************************************
*         * CEESECS takes the timestamp END-TIME and returns a  *
*         * double-precision Lilian seconds tally in END-SECS.  *
*         ********************************************************
          CALL "CEESECS" USING END-TIME, PICSTR, END-SECS, FC
          IF CEE000 of FC THEN
              COMPUTE ELAPSED-TIME = (END-SECS - START-SECS) / 3600
              MOVE ELAPSED-TIME TO ELAPSED-TIME-OUT
              DISPLAY ELAPSED-TIME-OUT
                  " hours have elapsed between "
                  Vstring-text of START-TIME
                  " and " Vstring-text of END-TIME
          ELSE
              DISPLAY "Error " Msg-No of FC
                  " converting ending date to Lilian date"
              STOP RUN
          END-IF
      ELSE
          DISPLAY "Error " Msg-No of FC
              " converting starting date to Lilian date"
```

```
            STOP RUN
          END-IF

          GOBACK.
```

Calls to CEESECS in PL/I

```
*PROCESS MACRO;
 /*Module/File Name: IBMDT1                              */
 /*****************************************************/
 /*                                                     */
 /* Function: CEESECS - convert timestamp to seconds */
 /*                                                     */
 /* This example calls the CEESECS callable          */
 /* service to compute the number of hours between   */
 /* the timestamps 11/02/92 05:22 and 11/02/92 17:22.*/
 /* The program responds that 36 hours has elapsed.  */
 /*                                                     */
 /*****************************************************/
 CE78DAT : PROC OPTIONS(MAIN);

    %INCLUDE  CEEIBMAW;
    %INCLUDE  CEEIBMCT;
    DCL START_TIME    CHAR(255) VARYING
                      INIT ( '11/02/92 05:22' );
    DCL END_TIME      CHAR(255) VARYING
                      INIT ( '11/03/92 17:22' );
    DCL PICSTR        CHAR(255) VARYING
                      INIT ( 'MM/DD/YY HH:MI' );
    DCL START_SECS    REAL FLOAT DECIMAL(16);
    DCL END_SECS      REAL FLOAT DECIMAL(16);
    DCL ELAPSED_TIME  FIXED DEC (9,4);
    DCL 01 FC,                      /* Feedback token */
           03 MsgSev    REAL FIXED BINARY(15,0),
           03 MsgNo     REAL FIXED BINARY(15,0),
           03 Flags,
              05 Case      BIT(2),
              05 Severity  BIT(3),
              05 Control   BIT(3),
           03 FacID     CHAR(3),      /* Facility ID */
           03 ISI   /* Instance-Specific Information */
                       REAL FIXED BINARY(31,0);
    /*****************************************************/
    /* CEESECS takes the timestamp START_TIME and    */
    /* returns a double-precision Lilian seconds     */
    /* tally in START_SECS.                          */
    /*****************************************************/
    CALL CEESECS ( START_TIME, PICSTR, START_SECS, FC );
    IF  FBCHECK( FC, CEE000)  THEN  DO;
       /*************************************************/
       /* CEESECS takes the timestamp END_TIME and   */
       /* returns a double-precision Lilian seconds  */
       /* tally in END_SECS.                         */
       /*************************************************/
       CALL CEESECS ( END_TIME, PICSTR, END_SECS, FC );
       IF  FBCHECK( FC, CEE000)  THEN  DO;
         ELAPSED_TIME = (END_SECS - START_SECS) / 3600;
         PUT SKIP EDIT( ELAPSED_TIME,
                ' hours have elapsed between ',
                START_TIME, ' and ', END_TIME)
             ( F(7,2), (4) A );
         END;
       ELSE  DO;
         PUT SKIP LIST( 'ERROR ' || FC.MsgNo ||
         ' CONVERTING ENDING TIMESTAMP TO SECONDS' );
         STOP;
         END;
       END;
```

```
   ELSE DO;
      PUT SKIP LIST( 'ERROR ' || FC.MsgNo
         || ' CONVERTING STARTING TIMESTAMP TO SECONDS' );
      STOP;
      END;

END CE78DAT ;
```

Examples illustrating calls to CEESECS and CEEDATM

The following examples illustrate calls to date and time services to convert a timestamp to seconds (CEESECS), twenty-four hours in seconds is subtracted from the original timestamp value, and a new timestamp is built (CEEDATM) for the updated number of seconds.

Calls to CEESECS and CEEDATM in C or C++

```
/*Module/File Name:  EDCDT2   */
 /************************************************************/
 /*                                                          */
 /*Function       : CEESECS - convert timestamp to seconds */
 /*               : CEEDATM - convert seconds to timestamp */
 /*               :                                          */
 /*CEESECS is used to convert a timestamp to seconds.      */
 /*24 hours in seconds is subtracted from                  */
 /*the number of seconds in the original timestamp.        */
 /*CEEDATM is then used to build a new timestamp           */
 /*representing the new date and time, 11/01/92 05:22.     */
 /*                                                          */
 /************************************************************/
#include <stdio.h>
#include <string.h>
#include <leawi.h>
#include <ceeedcct.h>
#define TimeStamp "11/02/92 05:22"
#define displacement 24
main ()
{
  int User_Input();
  _VSTRING Time_Stamp;
  _CHAR80 New_TimeStamp;
  _VSTRING  picstr;
  _FLOAT8 Lilian_Seconds;
  _FLOAT8 New_Secs;
  _FEEDBACK FC;
  _INT4 dest=2;
  char  New_Time[15];

  /*************************************************************
   The date picstr must be set to match the timestamp format.
   *************************************************************/
   strncpy (picstr.string,"MM/DD/YY HH:MI",14);
   picstr.length = 14;

  /*************************************************************/
  /* In the following loop the timestamp is converted to Lilian*/
  /* seconds. 24 hours in seconds are subtracted from the      */
  /* Lilian seconds and a new timestamp is created and         */
  /* displayed.                                                */
  /*************************************************************/
   strncpy(Time_Stamp.string,TimeStamp,14);
   Time_Stamp.length = 14;
  /*************************************************************
   CEESECS takes the user-entered timestamp Time_Stamp and
   returns a double-precision Lilian seconds tally in
   Lilian_Seconds
   *************************************************************/
```

```
   CEESECS ( &Time_Stamp, &picstr , &Lilian_Seconds , &FC );
   if ( (_FBCHECK (FC , CEE000)) == 0 )
   {
  /************************************************************
   The displacement variable is subtracted from the Lilian
   seconds tally in Lilian_Seconds
   ************************************************************/
     New_Secs = Lilian_Seconds -  displacement * 3600.0;
  /************************************************************
   CEEDATM is invoked to get a new timestamp value based on the
   new Lilian seconds tally in New_Secs.
   ************************************************************/
     CEEDATM ( &New_Secs, &picstr , New_TimeStamp , &FC );
     if ( (_FBCHECK (FC , CEE000)) == 0 )
     {
       New_TimeStamp[14] = '\0';
       sprintf(New_Time,"%s\0",New_TimeStamp);
       printf("%s is the time %i hours before %s\n",
               New_Time, displacement, TimeStamp);
     }
     else
     {
       printf ( "Error converting Seconds to TimeStamp.\n" );
       CEEMSG(&FC, &dest, NULL);
     }
   }
   else
   {
     printf ( "Error converting TimeStamp to seconds.\n" );
     CEEMSG(&FC, &dest, NULL);
   }
}
```

Calls to CEESECS and CEEDATM in COBOL

```
CBL LIB,QUOTE
      *Module/File Name: IGZTDT2
      ************************************************************
      **                                                        **
      ** CEE80DAT - Call CEESECS to convert timestamp to seconds**
      **            and CEEDATM to convert seconds to timestamp **
      **                                                        **
      **  CEESECS is used to convert a timestamp to seconds.    **
      **  24 hours in seconds is subtracted from                **
      **  the number of seconds in the original timestamp.      **
      **  CEEDATM is then used to build a new timestamp for     **
      **  the updated number of seconds.                        **
      **                                                        **
      ************************************************************
       IDENTIFICATION DIVISION.
       PROGRAM-ID. CE80DAT.
       DATA DIVISION.
       WORKING-STORAGE SECTION.
      *  Double precision needed for the seconds results
       01  START-SECS              COMP-2.
       01  NEW-TIME                COMP-2.
       01  FC.
           02  Condition-Token-Value.
           COPY  CEEIGZCT.
               03  Case-1-Condition-ID.
                   04  Severity        PIC S9(4) BINARY.
                   04  Msg-No          PIC S9(4) BINARY.
               03  Case-2-Condition-ID
                         REDEFINES Case-1-Condition-ID.
                   04  Class-Code      PIC S9(4) BINARY.
                   04  Cause-Code      PIC S9(4) BINARY.
               03  Case-Sev-Ctl    PIC X.
               03  Facility-ID     PIC XXX.
```

```
           02  I-S-Info        PIC S9(9) BINARY.
       01  PICSTR.
           02  Vstring-length      PIC S9(4) BINARY.
           02  Vstring-text.
               03  Vstring-char        PIC X
                           OCCURS 0 TO 256 TIMES
                           DEPENDING ON Vstring-length
                              of PICSTR.
       01  WS-TIMESTAMP.
           02  Vstring-length      PIC S9(4) BINARY.
           02  Vstring-text.
               03  Vstring-char        PIC X
                           OCCURS 0 TO 256 TIMES
                           DEPENDING ON Vstring-length
                              of WS-TIMESTAMP.
       01  NEW-TIMESTAMP           PIC X(80).
       01  INPUT-VARIABLES.
           05  SECONDS-DISPLACED   PIC S9(9) BINARY.
           05  ELAPSED-TIME-OUT    PIC +Z(4)9.99.

       PROCEDURE DIVISION.
       0001-BEGIN-PROCESSING.
           MOVE  14 TO Vstring-length of PICSTR.
           MOVE "MM/DD/YY HH:MI" TO Vstring-text of PICSTR.
           MOVE 14 TO Vstring-length of WS-TIMESTAMP.
           MOVE "11/02/92 05:22" TO Vstring-text of WS-TIMESTAMP.
      *    ************************************************************
      *    * CEESECS is invoked to obtain the Lilian seconds tally  *
      *    * corresponding to the timestamp 11/02/92 05:22.         *
      *    * The Lilian seconds tally is returned in the double-    *
      *    * precision floating-point field START-SECS.             *
      *    ************************************************************
           CALL "CEESECS" USING WS-TIMESTAMP, PICSTR, START-SECS, FC.
           IF CEE000 of FC THEN
      *        ***********************************************
      *        * The Lilian seconds tally in START-SECS is  *
      *        * decremented by 24 hours worth of seconds.. *
      *        ***********************************************
               COMPUTE NEW-TIME = START-SECS - 24 * 3600
      *        ************************************************
      *        * CEEDATM is invoked to obtain a new timestamp   *
      *        * based on the new Lilian seconds tally.         *
      *        ************************************************
               CALL "CEEDATM" USING NEW-TIME, PICSTR, NEW-TIMESTAMP, FC
               IF CEE000 of FC THEN
                   DISPLAY "The time  24 hours before "
                       Vstring-text of WS-TIMESTAMP
                       " is " NEW-TIMESTAMP
               ELSE
                   DISPLAY "Error converting seconds to timestamp."
                   STOP RUN
               END-IF
           ELSE
               DISPLAY "Error converting timestamp to seconds."
               STOP RUN
           END-IF

           GOBACK.
```

Calls to CEESECS and CEEDATM in PL/I

```
*PROCESS MACRO;
 /*Module/File Name: IBMDT2                          */
 /***************************************************/
 /*                                                 */
 /* Function: CEESECS - convert timestamp to seconds */
 /*         : CEEDATM - convert seconds to timestamp */
 /*                                                 */
```

```
/* CEESECS is used to convert a timestamp to        */
/* seconds. 24 hours in seconds is subtracted from  */
/* the number of seconds in the original timestamp. */
/* CEEDATM is then used to build a new timestamp    */
/* representing the new date and time.              */
/*                                                  */
/****************************************************/
PLIDS: PROC OPTIONS(MAIN);

   %INCLUDE  CEEIBMAW;
   %INCLUDE  CEEIBMCT;

   DCL TIMESTAMP      CHAR(255) VARYING
                      INIT('01/26/67 20:00');
   DCL NEW_TIMESTAMP  CHAR(80);
   DCL PICSTR         CHAR(255) VARYING
                      INIT ( 'MM/DD/YY HH:MI' );
   DCL START_SECS     REAL FLOAT DECIMAL(16);
   DCL NEW_TIME       REAL FLOAT DECIMAL(16);
   DCL DISPLACEMENT   REAL FIXED BINARY(31,0) INIT(24);
   DCL 01 FC,                      /* Feedback token */
          03 MsgSev    REAL FIXED BINARY(15,0),
          03 MsgNo     REAL FIXED BINARY(15,0),
          03 Flags,
             05 Case      BIT(2),
             05 Severity  BIT(3),
             05 Control   BIT(3),
          03 FacID     CHAR(3),      /* Facility ID */
          03 ISI   /* Instance-Specific Information */
                       REAL FIXED BINARY(31,0);
   /************************************************/
   /* CEESECS is invoked to obtain the Lilian      */
   /* seconds tally corresponding to the timestamp */
   /* 01/26/67 20:00.  The Lilian seconds tally is */
   /* returned in double-precision variable        */
   /* START_SECS.                                  */
   /************************************************/
   CALL CEESECS ( TIMESTAMP, PICSTR, START_SECS, FC );
   IF  FBCHECK( FC, CEE000)  THEN  DO;
      /*********************************************/
      /* The Lilian seconds tally in START_SECS is */
      /* decremented by 24 hour DISPLACEMENT       */
      /* variable times 3600 seconds.              */
      /********************************************* */
      NEW_TIME = START_SECS - DISPLACEMENT * 3600;
      /*********************************************/
      /* CEEDATM is invoked to obtain a new        */
      /* TimeStamp based on the new Lilian seconds. */
      /*********************************************/
      CALL CEEDATM ( NEW_TIME, PICSTR, NEW_TIMESTAMP, FC );
      IF  FBCHECK( FC, CEE000)  THEN  DO;
         PUT SKIP LIST ( 'The time ' || DISPLACEMENT
            || ' hours before ' || TIMESTAMP
            || ' is ' || NEW_TIMESTAMP );
         END;
      ELSE  DO;
         PUT SKIP LIST('ERROR CONVERTING SECONDS TO TIMESTAMP');
         PUT SKIP LIST( 'CEEDATM failed with msg '|| FC.MsgNo );
         END;
      END;
   ELSE  DO;
      PUT SKIP LIST('ERROR CONVERTING TIMESTAMP TO SECONDS' );
      PUT SKIP LIST( 'CEESECS failed with msg '|| FC.MsgNo );
      END;

END PLIDS;
```

Examples illustrating calls to CEESECS, CEESECI, CEEISEC, and CEEDATM

The following examples illustrate calls to date and time services to convert a timestamp into seconds (CEESECS), convert the seconds to a date and time component (CEESECI), add thirty-two months to the month component, convert the date and time component back to seconds (CEEISEC), and build a new timestamp (CEEDATM).

Calls to CEESECS, CEESECI, CEEISEC, and CEEDATM in C or C++

```
 /*Module/File Name: EDCDT3  */
 /*********************************************************************/
 /*                                                                   */
 /*Function       : CEESECS - convert timestamp to seconds           */
 /*               : CEESECI - convert seconds to time components     */
 /*               : CEEISEC - convert time components to seconds     */
 /*               : CEEDATM - convert seconds to timeStamp           */
 /*               :                                                  */
 /*32 months is added to the timestamp 11/02/92 05:22 giving         */
 /*the new timestamp 07/02/95 05:22.                                  */
 /*                                                                   */
 /*CEESECS is used to convert timestamp 11/02/92 05:22 to seconds.   */
 /*CEESECI is used to convert the seconds to date/time components.   */
 /*32 months is added to the month component.                        */
 /*CEEISEC is then used to convert date/time components to seconds.  */
 /*CEEDATM is then used to build a new timestamp for the             */
 /*new time.                                                         */
 /*                                                                   */
 /*********************************************************************/
#include <stdio.h>
#include <string.h>
#include <leawi.h>
#include <ceeedcct.h>
#define TimeStamp "11/02/92 05:22"
#define displacement 32
void main ()
{
  _VSTRING Time_Stamp;
  _CHAR80 New_TimeStamp;
  _VSTRING  picstr;
  _FLOAT8 Lilian_Seconds;
  _FLOAT8 New_Secs;
  _FEEDBACK FC;
   char  New_Time[15];
  int Month_in_Century;
  /*****************************************
    Date/time components for CEESECI, CEEISEC.
   *****************************************/
   _INT4 year;
   _INT4 month;
   _INT4 days;
   _INT4 hours;
   _INT4 minutes;
   _INT4 seconds;
   _INT4 millsec;
  /*************************************************************
   The date picstr must be set to match the timestamp format.
   *************************************************************/
   strcpy (picstr.string,"MM/DD/YY HH:MI");
   picstr.length = 14;
   strncpy(Time_Stamp.string,TimeStamp,14);
   Time_Stamp.length = 14;
  /*********************************************************
   CEESECS takes the timestamp "11/02/92 05:22" and returns
```

```
 a double-precision Lilian seconds tally in Lilian_Seconds
 ***********************************************************/
 CEESECS ( &Time_Stamp, &picstr , &Lilian_Seconds , &FC );
 if ((_FBCHECK (FC, CEE000)) == 0)
  {
/*************************************************************
 CEESECI converts the Lilian seconds tally in Lilian_Seconds and
 returns date/time components.
 *************************************************************/
    CEESECI ( &Lilian_Seconds, &year, &month, &days, &hours,
              &minutes, &seconds, &millsec, &FC);
    if ((_FBCHECK (FC, CEE000)) == 0)
     {
/*************************************************************
 The month component of the timestamp is converted to
 month-in-century.
 Then a new month and a new year are computed from the
 new month-in-century number. The month date/time component has a
 range between 1 and 12.
 *************************************************************/
       Month_in_Century = year*12 + month + displacement - 1;
       year = Month_in_Century / 12;
       month = (Month_in_Century % 12) + 1;
/* ************************************************************
 The month date/time component has been shifted
 forward 32 months. Our examples gets a new Lilian seconds
 tally based on the new month and year components.
 This is done with a call to function CEEISEC.
 The new Lilian seconds tally is placed in the double-precision
 variable Lilian_Seconds.
 *************************************************************/
       CEEISEC (&year,
                &month,
                &days,
                &hours,
                &minutes,
                &seconds,
                &millsec, &Lilian_Seconds, &FC );
       if ((_FBCHECK (FC, CEE000)) == 0)
        {
/*************************************************************
 CEEDATM is invoked to get a new timestamp value based on the
 new Lilian seconds tally in Lilian_Seconds.
 *************************************************************/
          CEEDATM ( &Lilian_Seconds,
                    &picstr ,
                    New_TimeStamp ,
                    &FC );
          if ((_FBCHECK (FC, CEE000)) == 0)
           {
             New_TimeStamp[14] = '\0';
             sprintf(New_Time,"%s\0",New_TimeStamp);
             if ( displacement < 0 )
              printf("%s is the time %d months before %s.\n",
                        New_Time, displacement, TimeStamp);
             else
              printf("%s will be the time %d months after %s.\n",
                         New_Time, displacement, TimeStamp);
           }
          else
             printf ( "Error converting Seconds to TimeStamp.\n" );
        }
       else
         printf ( "Error converting Components to seconds.\n" );
    }
   else
      printf ( "Error converting seconds to components.\n" );
```

```
   }
  else
   printf ( "Error converting TimeStamp to seconds\n" );
}
```

Calls to CEESECS, CEESECI, CEEISEC, and CEEDATM in COBOL

```
CBL LIB,QUOTE
      *Module/File Name: IGZTDT3
      ****************************************************************
      * CE81DATA - Call the following LE service routines:           *
      *           : CEESECS - convert timestamp to seconds           *
      *           : CEESECI - convert seconds to time components     *
      *           : CEEISEC - convert time components to seconds     *
      *           : CEEDATM - convert seconds to timestamp           *
      *   CEESECS is used to convert the timestamp to seconds        *
      *   CEESECI is used to convert seconds to date/time components.*
      *   32 months is added to the month and year component         *
      *       of date/time.                                          *
      *   CEEISEC is to convert the date/time components with the    *
      *       new months component back to a Lilian seconds tally.   *
      *   CEEDATM is then used to build a new timestamp for          *
      *       the updated number of seconds.                         *
      ****************************************************************
       IDENTIFICATION DIVISION.
       PROGRAM-ID. CE81DAT.
       DATA DIVISION.
       WORKING-STORAGE SECTION.
      *  Double precision needed for the seconds results
       01  START-SECS              COMP-2.
       01  NEW-TIME                COMP-2.
       01  FC.
           02  Condition-Token-Value.
           COPY  CEEIGZCT.
               03  Case-1-Condition-ID.
                   04  Severity        PIC S9(4) BINARY.
                   04  Msg-No          PIC S9(4) BINARY.
               03  Case-2-Condition-ID
                        REDEFINES Case-1-Condition-ID.
                   04  Class-Code      PIC S9(4) BINARY.
                   04  Cause-Code      PIC S9(4) BINARY.
               03  Case-Sev-Ctl    PIC X.
               03  Facility-ID     PIC XXX.
           02  I-S-Info        PIC S9(9) BINARY.
       01  PICSTR.
           02  Vstring-length      PIC S9(4) BINARY.
           02  Vstring-text.
               03  Vstring-char        PIC X
                           OCCURS 0 TO 256 TIMES
                           DEPENDING ON Vstring-length
                              of PICSTR.
       01  WS-TIMESTAMP.
           02  Vstring-length      PIC S9(4) BINARY.
           02  Vstring-text.
               03  Vstring-char        PIC X
                           OCCURS 0 TO 256 TIMES
                           DEPENDING ON Vstring-length
                              of WS-TIMESTAMP.
       01  NEW-TIMESTAMP           PIC X(80).
      *    ********************************************
      *    * These are the date/time variables used by *
      *    * CEEISEC and CEESECI.                      *
      *    ********************************************
       01  DATE-TIME-COMPONENTS BINARY.
           05  YEAR                PIC 9(9).
           05  MONTH               PIC 9(9).
```

```
     05  DAYS                PIC 9(9).
     05  HOURS               PIC 9(9).
     05  MINUTES             PIC 9(9).
     05  SECONDS             PIC 9(9).
     05  MILLSEC             PIC 9(9).
 01  FILLER                  PIC X(80).
 01  INPUT-VARIABLES.
     05  MONTHS-TO-DISPLACE  PIC S9(4) BINARY VALUE 32.
     05  DISPLACEMENT-COMP   PIC S9(4) BINARY.
     05  MONTHNUM            PIC 9(9)  BINARY.

 PROCEDURE DIVISION.

 0001-BEGIN-PROCESSING.
     MOVE 14 TO Vstring-length of WS-TIMESTAMP.
     MOVE "11/02/92 05:22" TO Vstring-text of WS-TIMESTAMP.
     MOVE 14 TO Vstring-length of PICSTR.
     MOVE "MM/DD/YY HH:MI" TO Vstring-text of PICSTR.
*    ************************************************************
*    * The timestamp "11/02/92 05:22" is converted to          *
*    * seconds under the control of the mask PICSTR.  CEESECS  *
*    * will return a Lilian seconds tally in the double-       *
*    * precision floating-point variable START-SECS.           *
*    ************************************************************
     CALL "CEESECS" USING WS-TIMESTAMP, PICSTR, START-SECS, FC.
     IF CEE000 of FC THEN
*    ************************************************************
*    * The Lilian seconds tally in field START-SECS is mapped  *
*    * into its date/time components using function CEESECI.   *
*    ************************************************************
         CALL "CEESECI" USING START-SECS, YEAR, MONTH, DAYS,
                              HOURS, MINUTES, SECONDS, MILLSEC, FC
         IF CEE000 of FC THEN
             MOVE MONTHS-TO-DISPLACE TO DISPLACEMENT-COMP
*            ****************************************************
*            * MONTH is converted to month-in-century for the   *
*            * displacement arithmetic. Then a new month and    *
*            * year are computed from the new month-in-century  *
*            * number (in variable MONTHNUM).  The months com-  *
*            * ponent has an allowed range of between 1 and 12.*
*            ****************************************************
             COMPUTE MONTHNUM =
                 YEAR * 12 + MONTH + DISPLACEMENT-COMP - 1
             DIVIDE MONTHNUM BY 12 GIVING YEAR REMAINDER MONTH
             ADD 1 TO MONTH
*            ****************************************************
*            * Now that the MONTH DateTime component has      *
*            * been shifted forward by 32 months,             *
*            * we must get a new Lilian seconds tally based   *
*            * on the new MONTH and YEAR components.  We      *
*            * do this with a call to the CEEISEC callable    *
*            * service.  The new Lilian seconds tally is      *
*            * placed in the double-precision field NEW-TIME. *
*            ****************************************************
             CALL "CEEISEC" USING YEAR, MONTH, DAYS, HOURS,
                          MINUTES, SECONDS, MILLSEC, NEW-TIME, FC
*            ****************************************
*            * CEEDATM is now used to obtain a new    *
*            * timestamp based on the Lilian seconds  *
*            * tally in the variable New-time.        *
*            ****************************************
             IF CEE000 THEN
                 CALL "CEEDATM" USING NEW-TIME, PICSTR,
                                      NEW-TIMESTAMP, FC
                 IF CEE000 THEN
                     DISPLAY "The time "
                         MONTHS-TO-DISPLACE " months after "
```

```
                            Vstring-text of WS-TIMESTAMP
                            " is " NEW-TIMESTAMP
                    ELSE
                        DISPLAY "Error " Msg-No of FC
                            " converting seconds to timestamp."
                    END-IF
                ELSE
                    DISPLAY "Error " Msg-No of FC
                        " converting components to seconds."
                END-IF
            ELSE
                DISPLAY "Error " Msg-No of FC
                    " converting seconds to components."
            END-IF
        ELSE
            DISPLAY "Error " Msg-No of FC
                " converting timestamp to seconds."
        END-IF

        GOBACK.
```

Calls to CEESECS, CEESECI, CEEISEC, and CEEDATM in PL/I

```
*PROCESS MACRO;
 /*Module/File Name: IBMDT3
 /*****************************************************************/
 /*                                                               */
 /* Function      : CEESECS - convert timestamp to seconds        */
 /*               : CEESECI - convert seconds to time components  */
 /*               : CEEISEC - convert time components to seconds  */
 /*               : CEEDATM - convert seconds to timestamp        */
 /*               :                                               */
 /* 32 months is added to the timestamp 11/02/92 05:22            */
 /*    giving the new timestamp 07/02/95 05:22.                   */
 /*                                                               */
 /* CEESECS is used to convert the timestamp to seconds           */
 /* CEESECI is used to convert seconds to date/time components    */
 /* 32 months is added to the month component.                    */
 /* CEEISEC is used to convert the date components to seconds.    */
 /* CEEDATM is then used to build a new timestamp for the         */
 /*    updated time.                                              */
 /*                                                               */
 /*****************************************************************/
 CE81DAT: PROC OPTIONS(MAIN);

    %INCLUDE  CEEIBMAW;
    %INCLUDE  CEEIBMCT;

    DCL TIMESTAMP       CHAR(255) VARYING INIT( '11/02/92 05:22' );
    DCL NEW_TIMESTAMP   CHAR(80);
    DCL PICSTR          CHAR(255) VARYING INIT( 'MM/DD/YY HH:MI' );
    DCL START_SECS      REAL FLOAT DECIMAL(16);
    DCL NEW_TIME        REAL FLOAT DECIMAL(16);
    DCL DISPLACEMENT    FIXED BIN(31,0) INIT(32);
    DCL MONTHNUM        FIXED BIN(31,0);
    DCL 01 FC,                      /* Feedback token */
           03 MsgSev    REAL FIXED BINARY(15,0),
           03 MsgNo     REAL FIXED BINARY(15,0),
           03 Flags,
              05 Case      BIT(2),
              05 Severity  BIT(3),
              05 Control   BIT(3),
           03 FacID     CHAR(3),    /* Facility ID */
           03 ISI                   /* Instance-Specific Information */
                        REAL FIXED BINARY(31,0);
    /****************************************/
    /* DATE COMPONENTS FOR CEESECI, CEEISEC   */
    /****************************************/
```

```
DCL YEAR       REAL FIXED BINARY(31,0);
DCL MONTH      REAL FIXED BINARY(31,0);
DCL DAYS       REAL FIXED BINARY(31,0);
DCL HOURS      REAL FIXED BINARY(31,0);
DCL MINUTES    REAL FIXED BINARY(31,0);
DCL SECONDS    REAL FIXED BINARY(31,0);
DCL MILLSEC    REAL FIXED BINARY(31,0);

/*********************************************************/
/* The timestamp '11/02/92 05:22' is converted to seconds */
/* under the control of the mask PICSTR. CEESECS will     */
/* return a Lilian seconds tally in the double-precision  */
/* floating-point field START_SECS.                       */
/*********************************************************/
CALL CEESECS ( TIMESTAMP, PICSTR, START_SECS, FC );
IF  FBCHECK( FC, CEE000)  THEN  DO;
/*************************************************************/
/* The Lilian seconds tally in the field START_SECS is mapped  */
/* into its date/time components using function CEESECI.       */
/*************************************************************/
   CALL CEESECI( START_SECS, YEAR, MONTH, DAYS, HOURS, MINUTES,
      SECONDS, MILLSEC, FC);
   IF  FBCHECK( FC, CEE000)  THEN  DO;
      /*************************************************************/
      /* MONTH is converted to month-in-century for the displace- */
      /* ment arithmetic. Then a new month and year are computed  */
      /* from the new month-in-century number. The months         */
      /* component has an allowed range of between 1 and 12.      */
      /*************************************************************/
      MONTHNUM = YEAR * 12 + MONTH + DISPLACEMENT - 1;
      YEAR = MONTHNUM / 12;
      MONTH = MOD(MONTHNUM, 12) + 1;
      /*************************************************************/
      /* Now that the MONTH DateTime component has been shifted  */
      /* forward by 32 months, we must get a new Lilian          */
      /* seconds tally based on the new MONTH and YEAR compo-    */
      /* nents.  We do this with a call to service CEEISEC.      */
      /* The new Lilian seconds tally is placed in the double-   */
      /* precision floating- point variable NEW_TIME.            */
      /*************************************************************/
      CALL CEEISEC (YEAR, MONTH, DAYS, HOURS, MINUTES, SECONDS,
         MILLSEC, NEW_TIME, FC);
      IF  FBCHECK( FC, CEE000)  THEN  DO;
         /*********************************************************/
         /* CEEDATM is now used to obtain a new timestamp based  */
         /* on the Lilian seconds tally in variable New_time     */
         /*********************************************************/
         CALL CEEDATM( NEW_TIME, PICSTR, NEW_TIMESTAMP, FC );
         IF  FBCHECK( FC, CEE000) THEN DO;
            PUT SKIP EDIT( 'The time ', DISPLACEMENT,
                  ' months after ', TIMESTAMP,
                  ' is ', NEW_TIMESTAMP  )
               (A, F(4), (3) A);
            END;
          ELSE  DO;
            PUT SKIP EDIT( 'ERROR ', FC.MsgNo,
                  ' CONVERTING SECONDS TO TIMESTAMP')
               (A, F(4), A);
            END;
         END;
       ELSE  DO;
         PUT SKIP EDIT( 'ERROR ', FC.MsgNo,
               ' CONVERTING COMPONENTS TO SECONDS')
            (A, F(4), A);
         END;
      END;
    ELSE  DO;
```

```
          PUT SKIP EDIT( 'ERROR ', FC.MsgNo,
                ' CONVERTING SECONDS TO COMPONENTS' )
             (A, F(4), A);
          END;
       END;
    ELSE  DO;
       PUT SKIP EDIT( 'ERROR ', FC.MsgNo,
             ' CONVERTING TIMESTAMP TO SECONDS' )
          (A, F(4), A);
       END;
 END CE81DAT;
```

Examples illustrating calls to CEEDAYS, CEEDATE, and CEEDYWK

The following examples illustrate calls to date and time services to convert a date to a Lilian date (CEEDAYS). In these examples, a varying number of days are added to the Lilian date, the date is converted back to a character format (CEEDATE), and the day of the week for that Lilian date is returned (CEEDYWK).

Calls to CEEDAYS, CEEDATE, and CEEDYWK for C or C++

```
/*Module/File Name:  EDCDT4   */
 /************************************************************/
 /*                                                          */
 /*Function       : CEEDAYS - convert date to Lilian date  */
 /*               : CEEDATE - convert Lilian date to date  */
 /*               : CEEDYWK - find day-of-week from Lilian */
 /*               :                                        */
 /*CEEDAYS is passed the calander date "11/09/92". The date*/
 /*is originally in YYMMD format and conversion to Lilian  */
 /*format takes place. On return, a varying number of days */
 /*is added to or subtracted from the Lilian date.         */
 /*CEEDATE is called to convert the Lilian dates to the    */
 /*calendar format "MM/DD/YY".                             */
 /*CEEDYWK is called to return the day of the week for     */
 /*each derived Lilian date.                               */
 /*                                                        */
 /*The results are tested for accuracy.                    */
 /*                                                        */
 /************************************************************/
#include <stdio.h>
#include <string.h>
#include <stdlib.h>
#include <time.h>
#include <leawi.h>
#include <ceeedcct.h>
  char PastFuture;
  int NumberOfDays[5] = { 80, 20, 10, 5, 4};
  int i;
void main ()
{
  _CHAR80 chrdate;
  _VSTRING  picstr;
  _VSTRING CurrentDate;
  _INT4 Current_Lilian;
  _INT4 Displaced_Lilian;
  _INT4 WeekDay;
  _INT4 ChkWeekDay[5] = { 6, 1, 5, 4, 6 };
  _FEEDBACK FC;
  char Entered_Date[8];
  _INT4 dest=2;

  struct tm *timeptr;
  char   Current_Date[6];
  time_t current_time;
```

```
char *ChkDates[] = {
                "08/21/92",
                "11/29/92",
                "11/19/92",
                "11/04/92",
                "11/13/92",
               };
/*********************************************************/
/* Set current date to 11/09/92 in YYMMDD format         */
/*********************************************************/

 strncpy (CurrentDate.string,"921109",6);
 CurrentDate.length = 6;

/*************************************************************/
/* The date picstr must be adjusted to fit the current date  */
/* format.                                                   */
/*************************************************************/
 strncpy (picstr.string,"YYMMDD",6);
 picstr.length = 6;
/*************************************************************/
/*Call CEEDAYS to convert the date in Current_Date to its    */
/*corresponding Lilian date format.                          */
/*************************************************************/
 CEEDAYS ( &CurrentDate, &picstr , &Current_Lilian , &FC );
 if ( _FBCHECK (FC , CEE000) != 0 )
   {
    printf ("Error in converting current date.\n");
    CEEMSG(&FC, &dest, NULL);
    exit(99);
   }

/*************************************************************/
/*Modify the date picstr to the familiar MM/DD/YY format.    */
/*************************************************************/
 strncpy (picstr.string,"MM/DD/YY",8);
 picstr.length = 8;

/*************************************************************/
/* In the following loop, add or subtract the number         */
/* of days in each element of the NumberOfDays array to the  */
/* Lilian date.  Determine the day of the week for each      */
/* Lilian date and convert each date back to "MM/DD/YY"      */
/* format. Issue a message if anything goes wrong.           */
/*************************************************************/
 for (i=0; i < 5; i++)
  {
   if (i == 0 || i == 3)
      Displaced_Lilian = Current_Lilian - NumberOfDays[i];
   else
      Displaced_Lilian = Current_Lilian + NumberOfDays[i];
 /************************************************************/
 /*Call CEEDATE to convert the Lilian dates to MM/DD/YY      */
 /*format.                                                   */
 /************************************************************/
   CEEDATE ( &Displaced_Lilian, &picstr , chrdate , &FC );
   if ( _FBCHECK (FC , CEE000) == 0 )
   {
      chrdate[8] = '\0';
 /************************************************************/
 /*Compare the dates to an array of expected values.         */
 /*Issue an error message if any conversion is incorrect.    */
 /************************************************************/
      if ( memcmp ( &chrdate, ChkDates[i] , 8) != 0)
        printf (
         "Error  in returned date %8s for displacement %d\n",
            chrdate,NumberOfDays[i]);
```

```
   /*************************************************************/
   /*Call CEEDYWK to return the day-of-the-week value (1 thru 7)   */
   /*for each calculated Lilian date. Compare results to an array  */
   /*of expected returned values and issue an error message for any*/
   /*incorrect values.                                            */
   /*************************************************************/
        CEEDYWK ( &Displaced_Lilian , &WeekDay , &FC );
        if ( _FBCHECK (FC , CEE000) == 0 )
        {
          if ( WeekDay != ChkWeekDay[i])
           printf ( "Error in day of the week for %s\n",
                    chrdate);
        }
        else
        {
          printf ("Error finding day of the week\n");
          CEEMSG(&FC, &dest, NULL);
        }
     }
     else
     {
       printf ( "Error converting Lilian date to date.\n" );
       CEEMSG(&FC, &dest, NULL);
     }
    } /* for loop */
}
```

Calls to CEEDAYS, CEEDATE, and CEEDYWK in COBOL

```
CBL LIB,QUOTE
      *Module/File Name: IGZTDT4
      ************************************************************
      **                                                        **
      ** CE77DAT - Call the following LE service routines:      **
      **          : CEEDAYS - convert date to Lilian format     **
      **          : CEEDATE - convert Lilian date to date       **
      **          : CEEDYWK - find day of week from Lilian      **
      **                                                        **
      ** CEEDAYS is passed the calendar date "11/09/92". The    **
      ** date is originally in YYMMDD format and conversion to  **
      ** Lilian format takes place. On return from CEEDAYS,     **
      ** a varying  number of days is added to or subtracted    **
      ** from the Lilian date.                                  **
      ** CEEDATE is then called to convert the Lilian dates to  **
      **     the format "MM/DD/YY".                             **
      ** CEEDYWK is called to return the day of the week for    **
      **     each derived Lilian date.                          **
      ** The results are tested for accuracy.                   **
      **                                                        **
      ************************************************************
       IDENTIFICATION DIVISION.
       PROGRAM-ID. CE77DAT.
       DATA DIVISION.
       WORKING-STORAGE SECTION.
       01  WEEKDAY                PIC S9(9) BINARY.
       01  LILIAN                 PIC S9(9) BINARY.
       01  CURRENT-LILIAN         PIC S9(9) BINARY.
       01  DISPLACED-LILIAN       PIC S9(9) BINARY.
       01  FC.
           02  Condition-Token-Value.
           COPY  CEEIGZCT.
               03  Case-1-Condition-ID.
                   04  Severity       PIC S9(4) BINARY.
                   04  Msg-No         PIC S9(4) BINARY.
               03  Case-2-Condition-ID
                         REDEFINES Case-1-Condition-ID.
                   04  Class-Code     PIC S9(4) BINARY.
```

```
            04  Cause-Code      PIC S9(4) BINARY.
        03  Case-Sev-Ctl    PIC X.
        03  Facility-ID     PIC XXX.
    02  I-S-Info        PIC S9(9) BINARY.
01  INDXX                   PIC S9(9) BINARY.
01  NUMBER-OF-DAYS.
    05  NUMBERS.
        10  FILLER          PIC S9(9) BINARY VALUE 80.
        10  FILLER          PIC S9(9) BINARY VALUE 20.
        10  FILLER          PIC S9(9) BINARY VALUE 10.
        10  FILLER          PIC S9(9) BINARY VALUE  5.
        10  FILLER          PIC S9(9) BINARY VALUE  4.
    05  NUMBEROFDAYS REDEFINES NUMBERS
                            PIC S9(9) BINARY OCCURS 5 TIMES.
01  PICSTR.
    02  Vstring-length      PIC S9(4) BINARY.
    02  Vstring-text.
        03  Vstring-char        PIC X,
                    OCCURS 0 TO 256 TIMES
                    DEPENDING ON Vstring-length
                       of PICSTR.
01  CHRDATE             PIC X(80).
01  CURRENT-DATE.
    02  Vstring-length      PIC S9(4) BINARY.
    02  Vstring-text.
        03  Vstring-char        PIC X
                    OCCURS 0 TO 256 TIMES
                    DEPENDING ON Vstring-length
                       of CURRENT-DATE.
01  INPUT-VARIABLES.
    05  DATE-TABLE.
       10  FILLER           PIC X(9) VALUE "08/21/92".
       10  FILLER           PIC X(9) VALUE "11/29/92".
       10  FILLER           PIC X(9) VALUE "11/19/92".
       10  FILLER           PIC X(9) VALUE "11/04/92".
       10  FILLER           PIC X(9) VALUE "11/13/92".
    05  CHKDATES REDEFINES DATE-TABLE PIC X(9)
           OCCURS 5 TIMES.
01  CHK-WEEKDAYS.
    05 DAY-TABLE.
       10  FILLER           PIC S9(9) BINARY VALUE 6.
       10  FILLER           PIC S9(9) BINARY VALUE 1.
       10  FILLER           PIC S9(9) BINARY VALUE 5.
       10  FILLER           PIC S9(9) BINARY VALUE 4.
       10  FILLER           PIC S9(9) BINARY VALUE 6.
    05 CHKWEEKDAY REDEFINES DAY-TABLE PIC S9(9) BINARY
           OCCURS 5 TIMES.

PROCEDURE DIVISION.

0001-BEGIN-PROCESSING.
    DISPLAY "*** Example CE77DAT in motion"
*    ********************************************************
*    * The current date is converted to a Lilian date.       *
*    ********************************************************
    MOVE  6 TO Vstring-length of PICSTR.
    MOVE "YYMMDD" TO Vstring-text of PICSTR.
    MOVE  6 TO Vstring-length of CURRENT-DATE.
    MOVE "921109" TO Vstring-text of CURRENT-DATE.
*    ********************************************************
*    * Call CEEDAYS to return the Lilian days tally for the  *
*    * date value in the variable CURRENT-DATE.              *
*    ********************************************************
    CALL "CEEDAYS" USING CURRENT-DATE, PICSTR,
                         CURRENT-LILIAN, FC.
    IF NOT CEE000 THEN
        DISPLAY "Error " Msg-No of FC
```

```
             " in converting current date"
        END-IF.
*       ********************************************************
*       * The datestamp mask must be changed for the dates      *
*       * being entered by the user.                            *
*       ********************************************************
        MOVE  8 TO Vstring-length of PICSTR.
        MOVE "MM/DD/YY" TO Vstring-text of PICSTR.
*       ********************************************************
*       * In the following loop, add or subtract the number of  *
*       * days in each element of the NumberofDays array to the *
*       * Lilian date. Determine the day of the week for each   *
*       * Lilian date and convert each date back to "MM/DD/YY"  *
*       * format. Issue a message if anything goes wrong.       *
*       ********************************************************
        MOVE 1 TO INDXX.
        PERFORM UNTIL INDXX = 6
            IF (INDXX = 1 OR 4) THEN
                COMPUTE DISPLACED-LILIAN =
                    CURRENT-LILIAN - NUMBEROFDAYS(INDXX)
            ELSE
                COMPUTE DISPLACED-LILIAN =
                    CURRENT-LILIAN + NUMBEROFDAYS(INDXX)
            END-IF
*           ************************************************
*           * Call CEEDATE to convert the Lilian dates to  *
*           * MM/DD/YY format.                             *
*           ************************************************
            CALL "CEEDATE" USING DISPLACED-LILIAN, PICSTR,
                                 CHRDATE, FC
            IF CEE000 THEN
*               ********************************************
*               * Compare converted date to expected value *
*               ********************************************
                IF CHRDATE NOT = CHKDATES(INDXX) THEN
                    DISPLAY "Expecting returned date of "
                        CHKDATES(INDXX)
                        " for displacement of " NUMBEROFDAYS(INDXX)
                        ", but got returned date of " CHRDATE
                END-IF
*               ****************************************************
*               * Call CEEDYWK to return a day-of-the week value (1 *
*               * thru 7) for each calculated Lilian date. Compare  *
*               * results to an array of expected values and issue  *
*               * an error message for any incorrect values.        *
*               ****************************************************
                CALL "CEEDYWK" USING DISPLACED-LILIAN, WEEKDAY, FC
                IF CEE000 THEN
                    IF  WEEKDAY NOT = CHKWEEKDAY(INDXX) THEN
                        DISPLAY "Expecting day of week "
                            CHKWEEKDAY(INDXX) ", but got " WEEKDAY
                            " instead for " CHRDATE
                    END-IF
                ELSE
                    DISPLAY "Error " Msg-No of FC
                        " in finding day-of-week"
                END-IF
            ELSE
                DISPLAY "Error " Msg-No of FC
                    " converting date to Lilian date"
            END-IF
            ADD 1 TO INDXX
        END-PERFORM.

        DISPLAY "*** Example CE77DAT complete"

        STOP RUN.
```

Calls to CEEDAYS, CEEDATE, and CEEDYWK in PL/I

```
*PROCESS MACRO;
 /*Module/File Name: IBMDT4
 /************************************************************/
 /*                                                          */
 /* Function      : CEEDAYS - convert date to Lilian date    */
 /*               : CEEDATE - convert Lilian Date to date    */
 /*               : CEEDYWK - find day-of-week from Lilian   */
 /*                                                          */
 /* CEEDAYS is passed the calander date "11/09/92". The      */
 /* date is originally in YYMMD format and conversion to     */
 /* Lilian format takes place. On return, a varying number   */
 /* of days is added to or subtracted from the Lilian date.  */
 /* CEEDATE is called to convert the Lilian dates to the     */
 /* calendar format "MM/DD/YY".  CEEDYWK is called to        */
 /* return the day of the week for each derived Lilian date. */
 /*                                                          */
 /* The results are tested for accuracy.                     */
 /*                                                          */
 /************************************************************/
 CE77DAT: PROC OPTIONS(MAIN);

    %INCLUDE  CEEIBMAW;
    %INCLUDE  CEEIBMCT;

    DCL CHRDATE          CHAR(80);
    DCL CURRENT_DATE     CHAR(255) VARYING;
    DCL PICSTR           CHAR(255) VARYING;
    DCL Lilian           REAL FIXED BINARY(31,0);
    DCL ii               REAL FIXED BINARY(31,0);
    DCL NumberOfDays (5) REAL FIXED BINARY(31,0)
                         INIT( 80, 20, 10, 5, 4);
    DCL ChkWeekDay   (5) REAL FIXED BINARY(31,0)
                         INIT(  6,  1,  5, 4, 6);
    DCL CURRENT_LILIAN   REAL FIXED BINARY(31,0);
    DCL DISPLACED_LILIAN REAL FIXED BINARY(31,0);
    DCL WEEKDAY          REAL FIXED BINARY(31,0);
    DCL 01 FC,                       /* Feedback token */
           03 MsgSev    REAL FIXED BINARY(15,0),
           03 MsgNo     REAL FIXED BINARY(15,0),
           03 Flags,
              05 Case      BIT(2),
              05 Severity  BIT(3),
              05 Control   BIT(3),
           03 FacID     CHAR(3),    /* Facility ID */
           03 ISI                   /* Instance-Specific Information */
                        REAL FIXED BINARY(31,0);
    DCL ChkDates (5)     CHAR(8) INIT(
                            '08/21/92',
                            '11/29/92',
                            '11/19/92',
                            '11/04/92',
                            '11/13/92');
    PUT SKIP LIST( '>>> Example CE77DAT in motion');
    /************************************************************/
    /* Set current date to 11/09/92 in YYMMDD format            */
    /************************************************************/
    Picstr = 'YYMMDD';
    Current_Date = '921109';
    /************************************************************/
    /* Call CEEDAYS to convert the date in Current_Date to      */
    /* its corresponding Lilian date format.                    */
    /************************************************************/
    Call CEEDAYS ( Current_Date, Picstr, Current_Lilian, FC );
    IF ^ FBCHECK( FC, CEE000)  THEN  DO;
         PUT SKIP LIST( 'Error in converting Current Date');
         END;
```

```
/*********************************************************/
/* The date picstr must be adjusted to fit the current     */
/* date format.                                            */
/*********************************************************/
Picstr = 'MM/DD/YY';
/*************************************************************/
/* In the following loop, add or subtract the number         */
/* of days in each element of the NumberOfDays array to the  */
/* Lilian date.  Determine the day of the week for each      */
/* Lilian date and convert each date back to "MM/DD/YY"      */
/* format.  Issue a message if anything goes wrong.          */
/*************************************************************/
DO ii = 1 TO 5;
   IF ( ii= 1 | ii= 4 )  THEN  DO;
      Displaced_Lilian = Current_Lilian - NumberOfDays(ii);
      END;
   ELSE  DO;
      Displaced_Lilian = Current_Lilian + NumberOfDays(ii);
      END;
   /*********************************************************/
   /* Call CEEDATE to convert the Lilian dates to MM/DD/YY   */
   /* format.                                               */
   /*********************************************************/
   Call CEEDATE ( Displaced_Lilian, Picstr, ChrDate, FC );
   IF FBCHECK( FC, CEE000)  THEN  DO;
      /*************************************************************/
      /* Compare the dates to an array of expected values.       */
      /* Issue an error message if any conversion is incorrect.  */
      /*************************************************************/
      IF  ChrDate ^= ChkDates(ii)  THEN  DO;
         PUT SKIP EDIT( 'Error in returned date ', Chrdate,
               ' for number of days ', NumberOfDays(i) )
            ( (3) a, f(6) );
         END;
      END;
   ELSE  DO;
      PUT SKIP LIST( 'Error ' || FC.MsgNo
         || ' converting Date to Lilian Date' );
      END;
   /*********************************************************/
   /* Call CEEDYWK to return the day-of-the-week value      */
   /* (1 thru 7) for each calculated Lilian date.  Compare  */
   /* results to an array of expected returned values and   */
   /* issue an error message for any incorrect values.      */
   /*********************************************************/
   Call CEEDYWK ( Displaced_Lilian, WeekDay, FC );
   IF FBCHECK( FC, CEE000)  THEN  DO;
      IF  WeekDay ^= ChkWeekDay(ii)  THEN  DO;
         PUT SKIP EDIT( 'Error in day of the week for ', ChrDate)
            ( a, a );
         END;
      END;
   ELSE  DO;
      PUT SKIP LIST( 'Error finding Day-of-Week');
      END;
   END;
  PUT SKIP LIST( '<<< Example CE77DAT complete');
END CE77DAT;
```

Calls to CEECBLDY in COBOL

This example shows converting a 2-digit input date to a COBOL Integer date, adding 90 days to the Integer date, and converting the Integer format date back to a 4-digit year format using COBOL intrinsic functions.

```
 CBL QUOTE
************************************************
*Module/File Name: CBLDAYS
************************************************
**                                            **
** Function: Invoke CEECBLDY callable service  **
** to convert date to COBOL Lilian format.     **
** This service is used when using the         **
** Language Environment Century Window         **
** mixed with COBOL Intrinsic Functions.       **
**                                            **
************************************************
 IDENTIFICATION DIVISION.
 PROGRAM-ID. CBLDAYS.
 DATA DIVISION.
 WORKING-STORAGE SECTION.
 01  CHRDATE.
     05  CHRDATE-LENGTH      PIC  9(2) BINARY.
     05  CHRDATE-STRING      PIC X(50).
 01  PICSTR.
     05  PICSTR-LENGTH       PIC S9(4) BINARY.
     05  PICSTR-STRING       PIC X(50).
 01  COBINT                  PIC S9(9) BINARY.
 01  NEWDATE                 PIC 9(8).
 01   FC                     PIC X(12).
 PROCEDURE DIVISION.
************************************************
** Specify input date and length              **
************************************************
     MOVE "1 January 00" to CHRDATE-STRING.
     MOVE 25 TO CHRDATE-LENGTH.
************************************************
** Specify a picture string that describes    **
** input date, and the picture string"s length.**
************************************************
     MOVE "ZD Mmmm
```

Chapter 21. National language support

This topic introduces the national language support services, which you use to set the national language, the country code, currency symbols, and decimal separators. It includes examples showing you how to query the default country code and change it, how to get the default date and time in the new country code, and how to convert the seconds to a timestamp. It also provides guidance for setting national language and country codes, including examples that show how national language services work in conjunction with date and time services.

Customizing Language Environment output for a given country

National language support services allow you to customize Language Environment output (such as messages, RPTOPTS reports, RPTSTG reports, or dumps) for a given country by specifying the following:

- The language in which runtime messages, days of the week, and months are displayed and printed
- A country code that indicates the default date and time format, currency symbol, decimal separator, and thousands separator

Related options:

COUNTRY
Sets default country

NATLANG
Sets initial national language

Related callable services:

CEE3CTY
Sets default country

CEE3LNG
Sets national language

CEE3MC2
Gets default and international currency symbols

CEE3MCS
Gets default currency symbol

CEE3MDS
Gets default decimal separator

CEE3MTS
Gets default thousands separator

CEEFMDA
Gets default date format

CEEFMDT
Gets default date and time format

CEEFMTM
Gets default time format

© Copyright IBM Corp. 1991, 2015

Setting the national language

You can set the national language with the NATLANG runtime option or the CEE3LNG callable service. CEE3LNG is not supported in PL/I multitasking applications. The national language settings affect the error messages, month name, and day of the week name. Message translations are provided for the following languages:

ENU Mixed-case U.S. English
UEN Uppercase U.S. English
JPN Japanese

Setting the country code

You can use the COUNTRY runtime option or the CEE3CTY callable service to set the current country code for your application. The country code determines the default formats used to display and print the date and timestamps in the reports generated by the RPTSTG runtime option, RPTOPTS runtime option, and the CEE3DMP (dump) callable service. Default values associated with the country code also describe the currency symbol, decimal separator, and thousands separator.

Because CEE3LNG and CEE3CTY allow you to maintain multiple national languages and country settings on separate LIFO stacks, you can easily reset the national language or alternate between different country settings. For example, if you want to ensure that a routine in your application outputs the date and time in a Japanese format, use CEE3CTY to query the current default setting and, if necessary, to set it to Japanese with CEE3CTY if some other country code is in effect. For sample user code, see *z/OS Language Environment Programming Reference*.

The C/C++ language provides locales, which are UNIX structures that reflect different linguistic, cultural, and territorial conventions. Locale-sensitive C language functions make use of values and formats in the currently loaded locale. The Locale callable services exploit a subset of these C library interfaces for internationalized applications. See Chapter 22, “Locale callable services,” on page 363 for more information.

However, although the National Language Support callable services have some functional overlap with the Locale callable services, the two sets of services are completely independent of each other. Locale settings and the COUNTRY runtime option do not affect each other. Likewise, the Locale callable services and the National Language Support callable services are mutually exclusive. The National Language Support callable services derive values and formats only from defaults established by the COUNTRY runtime option or the CEE3CNTY service.

Language Environment does not currently support certain languages as national languages, so you would not be able to use CEE3LNG to set the national language to an unsupported language. You can, however, change the date and time format so that your English or Japanese banking application, for example, would display the default date and time format for an unsupported language. In general, you must use CEE3CTY to set the conventions for formatting date and time information.

Euro support

The current country code determines the default currency symbol that will be returned by the CEE3MCS callable service.

For countries in the European Union that have adopted the Euro as the legal tender, the currency symbol is represented as a hex string in the default country settings. For specific values, see *z/OS Language Environment Programming Reference*. The value is taken from a typical code page for the given country, but, of course, the actual graphical representation depends on the code page in use.

Language Environment supports the Euro as the default currency symbol in the following countries: Austria, Belgium, Finland, France, Germany, Greece, Ireland, Italy, Luxembourg, the Netherlands, Portugal, and Spain. As more countries pass the Economic and Monetary Union convergence criteria and adopt the Euro as the legal currency, the Euro sign will replace the national currency symbol as the default.

Combining national language support and date and time services

To customize your applications for a particular country, use national language support services to query the current country code, which you then can use as input to the Language Environment date and time callable services. For example, you could query the current country code with CEE3CTY and then use the returned value and CEEFMDT to get the default date and time format. When calling the CEEDATM (convert seconds to character timestamp) date and time service, you can use the string returned by CEEFMDT to specify the format of the convert seconds to character timestamp.

Calls to CEE3CTY, CEEFMDT, and CEEDATM in C

This example illustrates how you would query the default country code (CEE3CTY), change it to another country code (CEE3CTY), get the default date and time in the new country code (CEEFMDT), and convert the seconds to a timestamp (CEEDATM).

```
/*Module/File Name: EDCNLS */
/*********************************************************************/
/* FUNCTION                                                          */
/*             CEE3CTY   : query default country. set country to     */
/*                       : Germany.                                  */
/*             CEEFMDT   : get the German date and time format       */
/*             CEEDATM   : convert seconds to timestamp              */
/*                                                                   */
/* This example shows how to use several of the LE national          */
/* language support callable services. The current country is queried */
/* and changed to Germany. The default date and time for Germany is   */
/* obtained. CEEDATM is called to convert a large numeric value in   */
/* seconds to the timestamp 16.05.1988 19:01:01.                     */
/*********************************************************************/
#include <stdio.h>
#include <string.h>
#include <leawi.h>
#include <stdlib.h>
#include <ceeedcct.h>

int main(void) {

  _FEEDBACK fc;
  _INT4 function;
  _CHAR2 country, symbol;
  _CHAR80 date_pic;
  _FLOAT8 seconds;
  _VSTRING  picstr;
  _CHAR80 timestp;
  #define DE  "DE"
  #define BL  "  "
```

```
  printf ( "\n*********************************\n");
  printf ( "CESCNLS C Example is now in motion");
  printf ( "\n*********************************\n");

  /*************************************************/
  /* Call CEE3CTY to query the current country setting */
  /*************************************************/
  function = 2;
  CEE3CTY(&function,country,&fc);
  if ( (_FBCHECK (fc , CEE000)) != 0 ) {
     printf("CEE3CTY failed with message number %d\n",fc.tok_msgno);
     exit(2999);
  }

  /*************************************************/
  /* Call CEE3CTY to set current country to Germany.   */
  /*************************************************/
  function = 3;
  CEE3CTY(&function,DE,&fc);
  if ( (_FBCHECK (fc , CEE000)) != 0 ) {
     printf("CEE3CTY failed with message number %d\n",fc.tok_msgno);
     exit(2999);
  }
  /*************************************************************/
  /* Call CEEFMDT retrieve the default date and time format     */
  /*************************************************************/
  CEEFMDT(BL,date_pic,&fc);
  if ( (_FBCHECK (fc , CEE000)) != 0 ) {
     printf("CEEFMDT failed with message number %d\n",fc.tok_msgno);
     exit(2999);
  }
  /*************************************************************/
  /* Call CEEDATM to convert the number of seconds from 12:00AM */
  /* October 14, 1582 to 7:01PM May 16, 1988 to character       */
  /* format. The default date and time format matches that of   */
  /* the default country, Germany.                              */
  /*************************************************************/
  seconds = 12799191661.986;
  strcpy(picstr.string,date_pic);
  picstr.length = strlen(picstr.string);
  CEEDATM ( &seconds , &picstr , timestp , &fc );
  if ( (_FBCHECK (fc , CEE000)) != 0 ) {
     printf("CEE3MDS failed with message number %d\n",fc.tok_msgno);
     exit(2999);
  }
  printf("Generated timestamp: %s",timestp);
  printf ("\n*********************\n");
  printf ("CESCNLS example ended.");
  printf ("\n*********************\n");
}
```

Calls to CEE3CTY, CEEFMDT, and CEEDATM in COBOL

the following example illustrates how you would query the default country code (CEE3CTY), change it to another country code (CEE3CTY), get the default date and time in the new country code (CEEFMDT), and convert the seconds to a timestamp (CEEDATM).

```
CBL LIB,QUOTE,RENT,OPTIMIZE
      *Module/file name: IGZTNLS
      ************************************************************
      **                                                        **
      **  CESCNLS - Call the following LE services:             **
      **                                                        **
      **               CEE3CTY  :  query default country        **
      **               CEEFMDT  :  obtain the default date and  **
```

```
**                          time format                 **
**              CEEDATM  :  convert seconds to timestamp **
**                                                      **
** This example shows how to use several of the LE      **
** national language support callable services in a     **
** COBOL program.  The current country is queried, saved, **
** and then changed to Germany. The default date and time **
** for Germany is obtained. CEEDATM is called to        **
** convert a large numeric value in seconds to the      **
** timestamp 16.05.1988 19:01:01 (May 16, 1988 7:01PM.) **
**                                                      **
**********************************************************
 IDENTIFICATION DIVISION.
 PROGRAM-ID. CESCNLS.
 DATA DIVISION.
 WORKING-STORAGE SECTION.
 01  SECONDS                 COMP-2.
 01  FUNCTN                  PIC S9(9) BINARY.
 01  COUNTRY                 PIC X(2).
 01  GERMANY                 PIC X(2) VALUE "DE".
 01  PICSTR.
     02  Vstring-length      PIC S9(4) BINARY.
     02  Vstring-text.
         03  Vstring-char        PIC X
                     OCCURS 0 TO 256 TIMES
                     DEPENDING ON Vstring-length
                        of PICSTR.
 01  TIMESTP                 PIC X(80).
 01  FC.
     02  Condition-Token-Value.
     COPY  CEEIGZCT.
         03  Case-1-Condition-ID.
             04  Severity    PIC S9(4) BINARY.
             04  Msg-No      PIC S9(4) BINARY.
         03  Case-2-Condition-ID
                   REDEFINES Case-1-Condition-ID.
             04  Class-Code  PIC S9(4) BINARY.
             04  Cause-Code  PIC S9(4) BINARY.
         03  Case-Sev-Ctl    PIC X.
         03  Facility-ID     PIC XXX.
     02  I-S-Info            PIC S9(9) BINARY.
 01  QUERY-COUNTRY-SETTING   PIC S9(9) BINARY VALUE 2.
 01  SET-COUNTRY-SETTING     PIC S9(9) BINARY VALUE 3.
 01  COUNTRY-PIC-STR         PIC X(80).

 PROCEDURE DIVISION.

 0001-BEGIN-PROCESSING.
     DISPLAY "************************************".
     DISPLAY "CESCNLS COBOL example is now in motion. ".
     DISPLAY "************************************".

*************************************************************
*      Query Country Setting                                *
*************************************************************
     MOVE QUERY-COUNTRY-SETTING TO FUNCTN.
     CALL "CEE3CTY" USING FUNCTN, COUNTRY, FC.
     IF NOT CEE000 of FC THEN
         DISPLAY "Error " Msg-No of FC
             " in query of country setting"
     ELSE
*************************************************************
*        Call CEE3CTY to set country to Germany             *
*************************************************************
         MOVE SET-COUNTRY-SETTING TO FUNCTN
         MOVE GERMANY TO COUNTRY
         CALL "CEE3CTY" USING FUNCTN, COUNTRY, FC
```

```
            IF NOT CEE000 of FC THEN
                DISPLAY "Error " Msg-No of FC
                    " in setting country"
            ELSE
      ************************************************************
      *           Call CEEFMDT to get default date/time          *
      *           format for Germany and verify format           *
      *           against the published value.                   *
      ************************************************************
                MOVE SPACE TO COUNTRY
                CALL "CEEFMDT" USING COUNTRY, COUNTRY-PIC-STR, FC
                IF NOT CEE000 of FC THEN
                    DISPLAY "Error getting default date/time"
                            " format for Germany."
                ELSE
      ************************************************************
      *               Call CEEDATM to convert the number of      *
      *               seconds from October 14, 1582 12:00AM      *
      *               to 16 May 1988 7:01PM to character format.*
      *               The default date and time matches          *
      *               that of the default country, Germany.      *
      ************************************************************
                    MOVE 12799191661.986 TO SECONDS
                    COMPUTE Vstring-length OF PICSTR =
                      FUNCTION MIN( LENGTH OF COUNTRY-PIC-STR, 256 )
                    MOVE COUNTRY-PIC-STR TO Vstring-text of PICSTR
                    CALL "CEEDATM" USING SECONDS, PICSTR,
                                         TIMESTP, FC
                    IF CEE000 of FC THEN
                        DISPLAY "Generated timestamp is: " TIMESTP
                    ELSE
                        DISPLAY "Error " Msg-No of FC
                            " generating timestamp"
                    END-IF
                END-IF
                DISPLAY "**********************"
                DISPLAY "COBOL NLS example ended"
                DISPLAY "**********************"
            END-IF
        END-IF.

        GOBACK.
```

Example using CEE3CTY, CEEFMDT, and CEEDATM in PL/I

Following is an example of querying and setting the country code and getting the date and time format in PL/I.

```
*PROCESS MACRO;
      /*Module/File Name: IBMNLS
      /************************************************************/
      /*                                                          */
      /* Function      CEE3CTY   : query default country          */
      /*               CEEFMDT   : obtain the default date and    */
      /*                           time format                    */
      /*               CEEDATM   : convert seconds to timestamp   */
      /*                                                          */
      /* This example shows how to use several of the LE          */
      /* national language support callable services in a         */
      /* PL/I program. The current country is queried, saved,     */
      /* and then changed to Germany. The default date and        */
      /* time for Germany is obtained. CEEDATM is called to       */
      /* convert a large numeric value in seconds to the          */
      /* timestamp 16.05.1988 19:01:01 (May 16, 1988 7:01PM).     */
      /*                                                          */
      /************************************************************/
    CESCNLS: PROC OPTIONS(MAIN);
```

```
%INCLUDE  CEEIBMAW;
%INCLUDE  CEEIBMCT;

DCL FUNCTN          REAL FIXED BINARY(31,0);
DCL QUERY_COUNTRY   REAL FIXED BINARY(31,0) INIT(2);
DCL SET_COUNTRY     REAL FIXED BINARY(31,0) INIT(3);
DCL SECONDS         REAL FLOAT DECIMAL(16);
DCL COUNTRY         CHARACTER ( 2 );
DCL GERMANY         CHARACTER ( 2 )INIT ('DE');
DCL 01 FC,                      /* Feedback token */
       03 MsgSev    REAL FIXED BINARY(15,0),
       03 MsgNo     REAL FIXED BINARY(15,0),
       03 Flags,
          05 Case      BIT(2),
          05 Severity  BIT(3),
          05 Control   BIT(3),
       03 FacID     CHAR(3),    /* Facility ID */
       03 ISI                   /* Instance-Specific Information */
                    REAL FIXED BINARY(31,0);
DCL TIMESTP         CHAR(80);
DCL PICSTR          CHAR(80);
DCL PIC_VSTR        CHAR(255) VARYING;

/*******************************************************/
/* Query country setting                               */
/*******************************************************/
FUNCTN = QUERY_COUNTRY;
CALL CEE3CTY ( FUNCTN, COUNTRY, FC );
IF  FBCHECK( FC, CEE000)  THEN  DO;
   /************************************************/
   /* Call CEE3CTY to set country to Germany       */
   /************************************************/
   FUNCTN = SET_COUNTRY;
   COUNTRY = GERMANY;
   CALL CEE3CTY ( FUNCTN, COUNTRY, FC );
   IF ^ FBCHECK( FC, CEE000)  THEN  DO;
      PUT SKIP LIST('Error ' || FC.MsgNo || ' in setting country');
      END;
   ELSE DO;
      /*****************************************************/
      /* Call CEEFMDT to get default date/time format for  */
      /* Germany and verify format against published value. */
      /*****************************************************/
      COUNTRY = ' ';
      CALL CEEFMDT ( COUNTRY, PICSTR, FC );
      IF ^ FBCHECK( FC, CEE000)  THEN  DO;
         PUT SKIP LIST( 'Error ' || FC.MsgNo
            || ' getting default date/time format for Germany.');
         END;
      ELSE DO;
         /************************************************/
         /* Call CEEDATM to convert the number representing */
         /* the number of seconds from October 14, 1582     */
         /* 12:00AM to 16 May 1988 7:01PM to character      */
         /* format. The default date and time format        */
         /* matches that of the default country, Germany.   */
         /************************************************/
         SECONDS = 12799191661.986;
         PIC_VSTR = PICSTR;
         CALL CEEDATM ( SECONDS, PIC_VSTR, TIMESTP, FC );
         IF FBCHECK( FC, CEE000)  THEN  DO;
            PUT SKIP EDIT ('Generated timestamp is ',
                           TIMESTP) (A, A);
            END;
         ELSE  DO;
            PUT SKIP LIST ('Error ' || FC.MsgNo
```

```
                        || ' generating timestamp');
                    END;
                 END;
              END;
           END;
        ELSE  DO;
           PUT SKIP LIST( 'Error ' || FC.MsgNo || ' querying country code');
           END;

     END CESCNLS;
```

Chapter 22. Locale callable services

This topic describes how to use the Language Environment locale callable services to internationalize your applications, and includes examples that show how locale callable services work in conjunction with each other. Locale callable services do not affect, nor are they affected by, Language Environment callable services or the COUNTRY or NATLANG runtime options. Language Environment locale callable services are not supported in PL/I multitasking applications.

Language Environment locale support adheres to the standards used by C. For detailed information about these standards, locales, and charmaps, see *z/OS XL C/C++ Programming Guide*.

Customizing Language Environment locale callable services

Locale callable services allow you to customize culturally-sensitive output for a given national language, country, and code set by specifying a locale name.

Related callable services:

CEEFMON
: Formats monetary string

CEEFTDS
: Formats date and time into a character string

CEELCNV
: Query locale numeric conventions

CEEQDTC
: Queries locale, date, and time conventions

CEEQRYL
: Queries the active locale environment

CEESCOL
: Compares the collation weights of two strings

CEESETL
: Sets the locale operating environment

CEESTXF
: Transforms string characters into collation weights

See *z/OS Language Environment Programming Reference* for syntax information.

Although C or C++ routines can use the locale callable services, it is recommended that they use the equivalent native C library services instead for portability across platforms. Table 56 shows the Language Environment locale callable services and the equivalent C library routines.

Table 56. Language Environment locale callable services and equivalent C library routines

Language Environment locale callable service	C library routine
CEEFMON	`strfmon()`
CEEFTDS	`strftime()`
CEELCNV	`localeconv()`
CEEQDTC	`localdtconv()`
CEEQRYL	`setlocale()`

© Copyright IBM Corp. 1991, 2015

Table 56. Language Environment locale callable services and equivalent C library routines (continued)

Language Environment locale callable service	C library routine
CEESCOL	`strcoll()`
CEESETL	`setlocale()`
CEESTXF	`strxfrm()`

Developing internationalized applications

Locale callable services define environment control variables that you can set to establish language-specific information and preferences for an application. Locale callable services also provide a means for establishing global preferences, such as `setlocale()`, locale management services, and locale-dependent interfaces to the application.

Locale callable services allow you to develop applications that can be used in multiple countries, because they can function with specific language and cultural conventions. Such applications are referred to as internationalized applications. These applications have no built-in assumptions with respect to the language, culture, or conventions of their users or the data they process. Instead, language and cultural information is set at run time, a process called localization. Thus, the application processes data provided specifically for a certain locale. In Language Environment, localization occurs at the enclave level.

Examples of using locale callable services

The following topics demonstrate how to use locale callable services in your applications.

Example calls to CEEFMON

The following examples illustrate calls to CEEFMON to convert a numeric value to a monetary string using a specified format.

Calls to CEEFMON in COBOL

```
 CBL LIB,QUOTE
*Module/File Name: IGZTFMON
************************************************
*  Example for callable service CEEFMON         *
*   Function: Convert a numeric value to a      *
*             monetary string using specified   *
*             format passed as parameter.       *
*   Valid only for COBOL for MVS & VM Release 2 *
*   or later.                                   *
************************************************
 IDENTIFICATION DIVISION.
 PROGRAM-ID.  COBFMON.
 DATA DIVISION.       WORKING-STORAGE SECTION.
 01  Monetary       COMP-2.
 01  Max-Size       PIC S9(9)  BINARY.
 01  Format-Mon.
     02  FM-Length  PIC S9(4)  BINARY.
     02  FM-String  PIC X(256).
 01  Output-Mon.
     02  OM-Length  PIC S9(4)  BINARY.
     02  OM-String  PIC X(60).
 01  Length-Mon     PIC S9(9)  BINARY.
 01  Locale-Name.
```

```
           02  LN-Length  PIC S9(4)  BINARY.
           02  LN-String  PIC X(256).
      **   Use Locale category constants
       COPY CEEIGZLC.
       01  FC.
           02  Condition-Token-Value.
           COPY CEEIGZCT.
               03  Case-1-Condition-ID.
                   04  Severity    PIC S9(4) BINARY.
                   04  Msg-No      PIC S9(4) BINARY.
               03  Case-2-Condition-ID
                         REDEFINES Case-1-Condition-ID.
                   04  Class-Code  PIC S9(4) BINARY.
                   04  Cause-Code  PIC S9(4) BINARY.
               03  Case-Sev-Ctl    PIC X.
               03  Facility-ID     PIC XXX.
           02  I-S-Info            PIC S9(9) BINARY.
      **
       PROCEDURE DIVISION.
      ** Set up locale name for United States
           MOVE 14 TO LN-Length.
           MOVE "En_US.IBM-1047"
                TO LN-String (1:LN-Length).
      ** Set all locale categories to United States.
      ** Use LC-ALL category constant from CEEIGZLC.
           CALL "CEESETL" USING Locale-Name, LC-ALL, FC.
      ** Check feedback code
           IF Severity > 0
              DISPLAY "Call to CEESETL failed. " Msg-No
              STOP RUN
           END-IF.
      ** Set up numeric value
           MOVE 12345.62 TO Monetary.
           MOVE 60 TO Max-Size.
           MOVE 2 TO FM-Length.
           MOVE "%i" TO FM-String (1:FM-Length).
      ** Call CEEFMON to convert numeric value
           CALL "CEEFMON" USING OMITTED, Monetary,
                                Max-Size, Format-Mon
                                Output-Mon, Length-Mon,
                                FC.
      ** Check feedback code and display result
           IF Severity > 0
              DISPLAY "Call to CEEFMON failed. " Msg-No
           ELSE
              DISPLAY "International format is "
                      OM-String(1:OM-Length)
           END-IF.

           STOP RUN.
       END PROGRAM COBFMON.
```

Calls to CEEFMON in PL/I

```
*PROCESS MACRO;
 /*Module/File Name: IBMFMON                          */
 /***************************************************/
 /* Example for callable service CEEFMON            */
 /* Function: Convert a numeric value to a monetary  */
 /*  string using specified format passed as parm    */
 /***************************************************/

 PLIFMON: PROC OPTIONS(MAIN);
 %INCLUDE CEEIBMAW; /* ENTRY defs, macro defs        */
 %INCLUDE CEEIBMCT; /* FBCHECK macro, FB constants   */
 %INCLUDE CEEIBMLC; /* Locale category constants     */
 /* CEESETL service call arguments */
 DCL LOCALE_NAME CHAR(14) VARYING;
```

```
/* CEEFMON service call arguments */
DCL MONETARY REAL FLOAT DEC(16);   /* input value   */
DCL MAXSIZE_FMON BIN FIXED(31);    /* output size   */
DCL FORMAT_FMON CHAR(256) VARYING; /* format spec   */
DCL RESULT_FMON BIN FIXED(31);     /* result status */
DCL OUTPUT_FMON CHAR(60) VARYING;  /* output string */
DCL 01 FC,                        /* Feedback token */
       03 MsgSev    REAL FIXED BINARY(15,0),
       03 MsgNo     REAL FIXED BINARY(15,0),
       03 Flags,
          05 Case      BIT(2),
          05 Severity  BIT(3),
          05 Control   BIT(3),
       03 FacID     CHAR(3),       /* Facility ID */
       03 ISI      /* Instance-Specific Information */
                    REAL FIXED BINARY(31,0);
  /* init locale name to United States */
  LOCALE_NAME = 'En_US.IBM-1047';
  /* use LC_ALL category constant from CEEIBMLC */
  CALL CEESETL (LOCALE_NAME, LC_ALL, FC);
  /* FBCHECK macro used (defined in CEEIBMCT) */
  IF FBCHECK (FC, CEE2KE) THEN
    DO;   /* invalid locale name */
      DISPLAY ('Locale LC_ALL Call '||FC.MsgNo);
      STOP;
    END;
    MONETARY = 12345.62; /* monetary numeric value  */
  MAXSIZE_FMON = 60;   /* max char length returned  */
  FORMAT_FMON = '%i';  /* international currency    */
  CALL CEEFMON ( *, /* optional argument            */
    MONETARY ,      /* input, 8 byte floating point */
    MAXSIZE_FMON,   /* maximum size of output string*/
    FORMAT_FMON,    /* conversion request           */
    OUTPUT_FMON,    /* string returned by CEEFMON   */
    RESULT_FMON,    /* no. of chars in OUTPUT_FMON  */
    FC );           /* feedback code structure      */
  IF RESULT_FMON = -1 THEN
    DO;
      /* FBCHECK macro used (defined in CEEIBMCT) */
      IF FBCHECK( FC, CEE3VM ) THEN
        DISPLAY ( 'Invalid input '||MONETARY );
      ELSE
        DISPLAY ('CEEFMON not completed '||FC.MsgNo );
      STOP;
    END;
  ELSE
    DO;
      PUT SKIP LIST(
        'International Format '||OUTPUT_FMON );
    END;
END PLIFMON;
```

Example calls to CEEFTDS

The following examples illustrate calls to CEEFTDS to convert a numeric time and date to a string using a specified format.

Calls to CEEFTDS in COBOL

```
      CBL LIB,QUOTE
     *Module/File Name: IGZTFTDS
     ************************************************
     *  Example for callable service CEEFTDS        *
     *  Function: Convert numeric time and date     *
     *            values to a string using specified *
     *            format string and locale format   *
     *            conversions.                      *
```

```
*  Valid only for COBOL for MVS & VM Release 2  *
*  or later.                                    *
************************************************
 IDENTIFICATION DIVISION.
 PROGRAM-ID.  MAINFTDS.
 DATA DIVISION.
 WORKING-STORAGE SECTION.
* Use TD-Struct for CEEFTDS calls
 COPY CEEIGZTD.
*

 PROCEDURE DIVISION.
*  Subroutine needed for pointer addressing
     CALL "COBFTDS" USING TD-Struct.

     STOP RUN.
*
 IDENTIFICATION DIVISION.
 PROGRAM-ID.  COBFTDS.
 DATA DIVISION.
 WORKING-STORAGE SECTION.
* Use Locale category constants
 COPY CEEIGZLC.
*
 01  Ptr-FTDS  POINTER.
 01  Output-FTDS.
     02  O-Length  PIC S9(4)  BINARY.
     02  O-String  PIC X(72).       01  Format-FTDS.
     02  F-Length  PIC S9(4)  BINARY.
     02  F-String  PIC X(64).
 01  Max-Size  PIC S9(9)  BINARY.
 01  FC.
     02  Condition-Token-Value.
     COPY CEEIGZCT.
         03  Case-1-Condition-ID.
             04  Severity  PIC S9(4) BINARY.
             04  Msg-No    PIC S9(4) BINARY.
         03  Case-2-Condition-ID
                REDEFINES Case-1-Condition-ID.
             04  Class-Code  PIC S9(4) BINARY.
             04  Cause-Code  PIC S9(4) BINARY.
         03  Case-Sev-Ctl  PIC X.
         03  Facility-ID   PIC XXX.
     02  I-S-Info  PIC S9(9) BINARY.
 LINKAGE SECTION.
* Use TD-Struct for calls to CEEFTDS
 COPY CEEIGZTD.
*
 PROCEDURE DIVISION USING TD-Struct.
*  Set up time and date values
     MOVE 1 TO TM-Sec.
     MOVE 2 TO TM-Min.
     MOVE 3 TO TM-Hour.
     MOVE 9 TO TM-Day.
     MOVE 11 TO TM-Mon.
     MOVE 94 TO TM-Year.
     MOVE 5 TO TM-Wday.
     MOVE 344 TO TM-Yday.
     MOVE 1 TO TM-Is-DLST.

*  Set up format string for CEEFTDS call
     MOVE 72 TO Max-Size.
     MOVE 36 TO F-Length.
     MOVE "Today is %A, %b %d  Time:  %I:%M  %p"
        TO F-String (1:F-Length).

*  Set up pointer to structure for CEEFTDS call
```

```
           SET Ptr-FTDS TO ADDRESS OF TD-Struct.

      *  Call CEEFTDS to convert numeric values
           CALL "CEEFTDS" USING OMITTED, Ptr-FTDS,
                                Max-Size, Format-FTDS,
                                Output-FTDS, FC.

      *  Check feedback code and display result
           IF Severity = 0
              DISPLAY "Format " F-String (1:F-Length)
              DISPLAY "Result " O-String (1:O-Length)
           ELSE
              DISPLAY "Call to CEEFTDS failed. " Msg-No
           END-IF.

           EXIT PROGRAM.
       END PROGRAM COBFTDS.
      *
       END PROGRAM MAINFTDS.
```

Calls to CEEFTDS in PL/I

```
*PROCESS MACRO;
 /*Module/File Name: IBMFTDS                          */
 /*************************************************/
 /* Example for callable service CEEFTDS            */
 /* Function: Convert numeric time and date values  */
 /*  to a string based on a format specification    */
 /*  string parameter and locale format conversions */
 /*************************************************/

 PLIFTDS: PROC OPTIONS(MAIN);

 %INCLUDE CEEIBMAW; /* ENTRY defs, macro defs       */
 %INCLUDE CEEIBMCT; /* FBCHECK macro, FB constants  */
 %INCLUDE CEEIBMLC; /* Locale category constants    */
 %INCLUDE CEEIBMTD; /* TD_STRUCT for CEEFTDS calls  */

 /* use explicit pointer to local TD_STRUCT structure*/
 DCL TIME_AND_DATE POINTER INIT(ADDR(TD_STRUCT));

 /* CEEFTDS service call arguments */
 DCL MAXSIZE_FTDS BIN FIXED(31); /* OUTPUT_FTDS size */
 DCL FORMAT_FTDS CHAR(64) VARYING;  /* format string */
 DCL OUTPUT_FTDS CHAR(72) VARYING;  /* output string */
 DCL 01 FC,                         /* Feedback token */
        03 MsgSev    REAL FIXED BINARY(15,0),
        03 MsgNo     REAL FIXED BINARY(15,0),
        03 Flags,
           05 Case      BIT(2),
           05 Severity  BIT(3),
           05 Control   BIT(3),
        03 FacID     CHAR(3),       /* Facility ID */
        03 ISI      /* Instance-Specific Information */
                     REAL FIXED BINARY(31,0);

   /* specify numeric input fields for conversion    */
   TD_STRUCT.TM_SEC=1;   /* seconds after min (0-61) */
   TD_STRUCT.TM_MIN=2;   /* minutes after hour (0-59)*/
   TD_STRUCT.TM_HOUR=3; /* hours since midnight(0-23)*/
   TD_STRUCT.TM_MDAY=9;  /* day of the month (1-31)  */
   TD_STRUCT.TM_MON=11;  /* months since Jan(0-11)   */
   TD_STRUCT.TM_YEAR=94; /* years since 1900         */
   TD_STRUCT.TM_WDAY=5;  /* days since Sunday (0-6)  */
   TD_STRUCT.TM_YDAY=344;/* days since Jan 1 (0-365) */
   TD_STRUCT.TM_ISDST=1; /* Daylight Saving Time flag*/

   /* specify format string for CEEFTDS call         */
```

```
FORMAT_FTDS = 'Today is %A, %b %d  Time: %I:%M %p';

MAXSIZE_FTDS = 72; /* specify output string size  */
CALL CEEFTDS ( *, TIME_AND_DATE, MAXSIZE_FTDS,
                  FORMAT_FTDS, OUTPUT_FTDS, FC );

/* FBCHECK macro used (defined in CEEIBMCT) */
IF FBCHECK( FC, CEE000 ) THEN
  DO; /* CEEFTDS call is successful */
    PUT SKIP LIST('Format '||FORMAT_FTDS );
    PUT SKIP LIST('Results in '||OUTPUT_FTDS );
  END;
ELSE
  DISPLAY ( 'Format '||FORMAT_FTDS||
            ' Results in '||FC.MsgNo );

END PLIFTDS;
```

Example calls to CEELCNV and CEESETL

The following examples illustrate calls to CEELCNV to retrieve the numeric and monetary format for the default locale, and to CEESETL to set the locale. These examples also indicate how to access the ISO/IEC 9899:1999 (C99) compliant version of the NM-Struct (COBOL) or NM_Struct (PL/I) copy of the localeconv structure in the C library. For further details, see the discussion of the CEELCNV callable service in *z/OS Language Environment Programming Reference*.

Calls to CEELCNV and CEESETL in COBOL

```
      CBL LIB,QUOTE
     *Module/File Name: IGZTLCNV
     ************************************************
     ** Example for callable service CEELCNV        **
     **  Function: Retrieve numeric and monetary    **
     **             format for default locale and   **
     **             print an item.                  **
     **            Set locale to France, retrieve   **
     **             structure, and print an item.   **
     ** Valid only for COBOL for MVS & VM Release 2 **
     ** or later.                                   **
     ************************************************
      IDENTIFICATION DIVISION.
      PROGRAM-ID.  MAINLCNV.
      DATA DIVISION.
      WORKING-STORAGE SECTION.
     ************************************************
     ** Use Locale NM-Struct for CEELCNV calls      **
     ************************************************
      COPY CEEIGZN2.
     *
      PROCEDURE DIVISION.
     ************************************************
     **  Subroutine needed for addressing          **
     ************************************************
          CALL "COBLCNV" USING NM-Struct.

          STOP RUN.
     *
      IDENTIFICATION DIVISION.
      PROGRAM-ID.  COBLCNV.
      DATA DIVISION.
      WORKING-STORAGE SECTION.
      01  PTR1 Pointer.
    01  Locale-Name.
          02  LN-Length  PIC S9(5) BINARY.
          02  LN-String  PIC X(256).
```

```
************************************************
** Use Locale category constants              **
************************************************
 COPY CEEIGZLC.
*
 01  FC.
     02  Condition-Token-Value.
     COPY CEEIGZCT.
         03  Case-1-Condition-ID.
             04  Severity    PIC S9(4) BINARY.
             04  Msg-No      PIC S9(4) BINARY.
         03  Case-2-Condition-ID
                REDEFINES Case-1-Condition-ID.
             04  Class-Code  PIC S9(4) BINARY.
             04  Cause-Code  PIC S9(4) BINARY.
         03  Case-Sev-Ctl    PIC X.
         03  Facility-ID     PIC XXX.
     02  I-S-Info            PIC S9(9) BINARY.

 LINKAGE SECTION.
************************************************
** Use Locale NM-Struct for CEELCNV calls      **
************************************************
 COPY CEEIGZN2.
*
 PROCEDURE DIVISION USING NM-Struct.
************************************************
**  Call CEELCNV to retrieve values for locale**
************************************************
     CALL "CEELCNV" USING OMITTED,
                    ADDRESS OF NM-Struct, FC.

************************************************
**  Check feedback code and display result     **
************************************************
     IF Severity = 0 THEN
        DISPLAY "Default decimal point is "
        DECIMAL-PT-String(1:DECIMAL-PT-Length)
     ELSE
        DISPLAY "Call to CEELCNV failed. " Msg-No
     END-IF.

************************************************
** Set up locale for France                   **
************************************************
     MOVE 5 TO LN-Length.
     MOVE "Fr_FR" TO LN-String (1:LN-Length).

************************************************
**  Call CEESETL to set monetary locale        **
************************************************
     CALL "CEESETL" USING Locale-Name,
           LC-MONETARY, FC.
************************************************
**  Call CEESETL to set numeric locale         **
************************************************
     CALL "CEESETL" USING Locale-Name,
           LC-NUMERIC, FC.
************************************************
**  Check feedback code and call CEELCNV again **
**  using version 2 to get at C99 mapping.**
************************************************
     IF Severity = 0
        MOVE 2 TO Version
        set PTR1 to address of Version-Info
        CALL "CEELCNV" USING PTR1,
                       ADDRESS OF NM-Struct, FC
```

```
            IF Severity > 0
               DISPLAY "Call to CEELCNV failed. "
                       Msg-No
            ELSE
               DISPLAY "French decimal point is "
               DECIMAL-PT-String(1:DECIMAL-PT-Length)
            END-IF
         ELSE
            DISPLAY "Call to CEESETL failed. " Msg-No
         END-IF.

         EXIT PROGRAM.
      END PROGRAM COBLCNV.
     *
      END PROGRAM MAINLCNV.
```

Calls to CEELCNV and CEESETL in PL/I

```
*PROCESS MACRO;
 /*Module/File Name: IBMLCNV                          */
 /*************************************************/
 /* Example for callable service CEELCNV           */
 /* Function: Retrieve numeric and monetary format  */
 /*  structure for default locale and print an item. */
 /*  Set locale to France, retrieve structure and   */
 /*  print an item.                                 */
 /*************************************************/

 PLILCNV: PROC OPTIONS(MAIN);

 %INCLUDE CEEIBMAW; /* ENTRY defs, macro defs       */
 %INCLUDE CEEIBMCT; /* FBCHECK macro, FB constants  */
 %INCLUDE CEEIBMLC; /* Locale category constants    */
 %INCLUDE CEEIBMN2; /* NM_STRUCT for CEELCNV calls  */

 /* use explicit pointer for local NM_STRUCT struct  */
 DCL NUM_AND_MON POINTER INIT(ADDR(NM_STRUCT));

/* Point to local version_info struct and initialize*/
/* VERSION TO 2 TO USE C99 MAPPING OF NM_STRUCT     */
DCL VERSN POINTER INIT(ADDR(version_info));
VERSION_INFO.VERSION = 2;

 /* CEESETL service call arguments */
 DCL LOCALE_NAME CHAR(256) VARYING;

 DCL 01 FC,                          /* Feedback token */
        03 MsgSev    REAL FIXED BINARY(15,0),
        03 MsgNo     REAL FIXED BINARY(15,0),
        03 Flags,
           05 Case      BIT(2),
           05 Severity  BIT(3),
           05 Control   BIT(3),
        03 FacID     CHAR(3),       /* Facility ID */
        03 ISI       /* Instance-Specific Information */
                     REAL FIXED BINARY(31,0);

   /* retrieve structure for default locale */
   CALL CEELCNV ( *, NUM_AND_MON, FC );

   PUT SKIP LIST('Default DECIMAL_POINT is ',
                 NM_STRUCT.DECIMAL_POINT);

   /* set locale for France */
   LOCALE_NAME = 'Fr_FR';

   /* use LC_NUMERIC category const from CEEIBMLC */
   CALL CEESETL ( LOCALE_NAME, LC_NUMERIC,  FC );
```

```
/* use LC_MONETARY category const from CEEIBMLC */
CALL CEESETL ( LOCALE_NAME, LC_MONETARY,  FC );

/* FBCHECK macro used (defined in CEEIBMCT) */
IF FBCHECK( FC, CEE000 ) THEN
  DO;
    /* retrieve active NM_STRUCT, France Locale */
    CALL CEELCNV ( VERSN, NUM_AND_MON, FC );

    PUT SKIP LIST('French DECIMAL_POINT is ',
                  NM_STRUCT.DECIMAL_POINT);
  END;

END PLILCNV;
```

Example calls to CEEQDTC and CEESETL

The following examples illustrate calls to CEEQDTC to retrieve the date and time conventions, and to CEESETL to set the locale. To see how to access ISO/IEC 9899:1999 (C99) extensions, refer to the CEELCNV examples. For specific details regarding parameter and copy file usage, see the discussion of the CEEQDTC callable service in *z/OS Language Environment Programming Reference*.

Calls to CEEQDTC and CEESETL in COBOL

```
      CBL LIB,QUOTE
     *Module/File Name: IGZTQDTC
     ************************************************
     *  Example for callable service CEEQDTC          *
     *  MAINQDTC - Retrieve date and time convention  *
     *             structures for two countries and   *
     *             compare an item.                   *
     *  Valid only for COBOL for MVS & VM Release 2   *
     *  or later.                                     *
     ************************************************
      IDENTIFICATION DIVISION.
      PROGRAM-ID.  MAINQDTC.
      DATA DIVISION.
      WORKING-STORAGE SECTION.
     * Use DTCONV structure for CEEQDTC calls
      COPY CEEIGZDT.
     *
      PROCEDURE DIVISION.
     *  Subroutine needed for addressing
          CALL "COBQDTC" USING DTCONV.
          STOP RUN.
     *
      IDENTIFICATION DIVISION.
      PROGRAM-ID.  COBQDTC.

      DATA DIVISION.
      WORKING-STORAGE SECTION.
      01  Locale-Name.
          02  LN-Length  PIC S9(4) BINARY.
          02  LN-String  PIC X(256).
     * Use Locale category constants
      COPY CEEIGZLC.
     *
      01  Test-Length1 PIC S9(4) BINARY.
      01  Test-String1 PIC X(80).
      01  Test-Length2 PIC S9(4) BINARY.
      01  Test-String2 PIC X(80).
      01  FC.
          02  Condition-Token-Value.
          COPY CEEIGZCT.
              03  Case-1-Condition-ID.
```

```
             04  Severity  PIC S9(4) BINARY.
             04  Msg-No    PIC S9(4) BINARY.
          03  Case-2-Condition-ID
                 REDEFINES Case-1-Condition-ID.
             04  Class-Code  PIC S9(4) BINARY.
             04  Cause-Code  PIC S9(4) BINARY.
          03  Case-Sev-Ctl  PIC X.
          03  Facility-ID   PIC XXX.
      02  I-S-Info  PIC S9(9) BINARY.
*
 LINKAGE SECTION.
* Use Locale structure DTCONV for CEEQDTC calls
 COPY CEEIGZDT.
*
 PROCEDURE DIVISION USING DTCONV.
*  Set up locale for France
     MOVE 4 TO LN-Length.
     MOVE "FFEY" TO LN-String (1:LN-Length).
*  Call CEESETL to set all locale categories
     CALL "CEESETL" USING Locale-Name, LC-ALL,
                          FC.

*  Check feedback code
     IF Severity > 0
        DISPLAY "Call to CEESETL failed. " Msg-No
        EXIT PROGRAM
     END-IF.

*  Call CEEQDTC for French values
     CALL "CEEQDTC" USING OMITTED,
                          ADDRESS OF DTCONV, FC.
*  Check feedback code
     IF Severity > 0
        DISPLAY "Call to CEEQDTC failed. " Msg-No
        EXIT PROGRAM
     END-IF.

*  Save date and time format for FFEY locale
     MOVE D-T-FMT-Length IN DTCONV TO Test-Length1
     MOVE D-T-FMT-String IN DTCONV TO Test-String1

*  Set up locale for French Canadian
     MOVE 4 TO LN-Length.
     MOVE "FCEY" TO LN-String (1:LN-Length).

*  Call CEESETL to set locale for all categories
     CALL "CEESETL" USING Locale-Name, LC-ALL,
                          FC.

*  Check feedback code
     IF Severity > 0
        DISPLAY "Call to CEESETL failed. " Msg-No
        EXIT PROGRAM
     END-IF.

*  Call CEEQDTC again for French Canadian values
     CALL "CEEQDTC" USING OMITTED,
                          ADDRESS OF DTCONV, FC.

*  Check feedback code and display results
     IF Severity = 0
*  Save date and time format for FCEY locale
        MOVE D-T-FMT-Length IN DTCONV
                            TO Test-Length2
        MOVE D-T-FMT-String IN DTCONV
                            TO Test-String2
        IF Test-String1(1:Test-Length1) =
```

```
                Test-String2(1:Test-Length2)
                DISPLAY "Same date and time format."
             ELSE
                DISPLAY "Different formats."
                DISPLAY  Test-String1(1:Test-Length1)
                DISPLAY  Test-String2(1:Test-Length2)
             END-IF
          ELSE
             DISPLAY "Call to CEEQDTC failed. " Msg-No
          END-IF.

          EXIT PROGRAM.
       END PROGRAM COBQDTC.
      *
       END PROGRAM MAINQDTC.
```

Calls to CEEQTDC and CEESETL in PL/I

```
*PROCESS MACRO;
 /*Module/File Name: IBMQDTC                          */
 /*************************************************/
 /* Example for callable service CEEQDTC             */
 /* Function: Retrieve date and time convention      */
 /*  structures for two countries, compare an item.  */
 /*************************************************/

 PLIQDTC: PROC OPTIONS(MAIN);

 %INCLUDE CEEIBMAW; /* ENTRY defs, macro defs        */
 %INCLUDE CEEIBMCT; /* FBCHECK macro, FB constants   */
 %INCLUDE CEEIBMLC; /* Locale category constants     */
 %INCLUDE CEEIBMDT; /* DTCONV for CEEQDTC calls      */

 /* use explicit pointer to local DTCONV structure */
 DCL LOCALDT POINTER INIT(ADDR(DTCONV));

 /* CEESETL service call arguments */
 DCL LOCALE_NAME CHAR(256) VARYING;

 DCL 1 DTCONVC LIKE DTCONV; /* Def Second Structure  */

 DCL 1 FC,                          /* Feedback token */
       3 MsgSev    REAL FIXED BINARY(15,0),
       3 MsgNo     REAL FIXED BINARY(15,0),
       3 Flags,
          5 Case      BIT(2),
          5 Severity  BIT(3),
          5 Control   BIT(3),
       3 FacID     CHAR(3),       /* Facility ID */
       3 ISI       /* Instance-Specific Information */
                    REAL FIXED BINARY(31,0);
   /* set locale with IBM default for France         */
   LOCALE_NAME = 'FFEY';   /* or Fr_FR.IBM-1047      */

   /* use LC_ALL category constant from CEEIBMLC */
   CALL CEESETL ( LOCALE_NAME, LC_ALL,  FC );

   /* retrieve date and time structure, France Locale*/
   CALL CEEQDTC ( *, LOCALDT, FC );

   /* set locale with French Canadian(FCEY) defaults */
   /* literal constant -1 used to set all categories */
   CALL CEESETL ( 'FCEY', -1,  FC );

   /* retrieve date and time tables for French Canada*/
   /* example of temp pointer used for service call  */
   CALL CEEQDTC ( *, ADDR(DTCONVC), FC );
   /* compare date and time formats for two countries*/
```

```
  IF DTCONVC.D_T_FMT = DTCONV.D_T_FMT THEN
    DO;
      PUT SKIP LIST('Countries have same D_T_FMT' );
    END;
  ELSE
    DO;
      PUT SKIP LIST('Date and Time Format ',
                    DTCONVC.D_T_FMT||' vs '||
                    DTCONV.D_T_FMT );
    END;

END PLIQDTC;
```

Example calls to CEESCOL

The following examples illustrate calls to CEESCOL to compare the collation of two character strings.

Calls to CEESCOL in COBOL

```
       CBL LIB,QUOTE
      *Module/File Name: IGZTSCOL
      ************************************************
      *  Example for callable service CEESCOL         *
      *   COBSCOL - Compare two character strings     *
      *             and print the result.            *
      *  Valid only for COBOL for MVS & VM Release 2  *
      *  or later.                                    *
      ************************************************
       IDENTIFICATION DIVISION.
       PROGRAM-ID.  COBSCOL.

       DATA DIVISION.
       WORKING-STORAGE SECTION.
       01  String1.
           02  Str1-Length  PIC S9(4) BINARY.
           02  Str1-String.
               03  Str1-Char  PIC X
                              OCCURS 0 TO 256 TIMES
                              DEPENDING ON Str1-Length.
       01  String2.
           02  Str2-Length  PIC S9(4) BINARY.
           02  Str2-String.
               03  Str2-Char  PIC X
                              OCCURS 0 TO 256 TIMES
                              DEPENDING ON Str2-Length.
       01  Result  PIC S9(9)  BINARY.
       01  FC.
           02  Condition-Token-Value.
           COPY CEEIGZCT.
               03  Case-1-Condition-ID.
                   04  Severity    PIC S9(4) BINARY.
                   04  Msg-No      PIC S9(4) BINARY.
               03  Case-2-Condition-ID
                         REDEFINES Case-1-Condition-ID.
                   04  Class-Code  PIC S9(4) BINARY.
                   04  Cause-Code  PIC S9(4) BINARY.
               03  Case-Sev-Ctl    PIC X.
               03  Facility-ID     PIC XXX.
           02  I-S-Info            PIC S9(9) BINARY.
      *
       PROCEDURE DIVISION.
      ************************************************
      *  Set up two strings for comparison
      ************************************************
           MOVE 9 TO Str1-Length.
           MOVE "12345a789"
```

```
           TO Str1-String (1:Str1-Length)
        MOVE 9 TO Str2-Length.
        MOVE "12346$789"
           TO Str2-String (1:Str2-Length)
     ************************************************
     *  Call CEESCOL to compare the strings
     ************************************************
        CALL "CEESCOL" USING OMITTED, String1,
                             String2, Result, FC.
     ************************************************
     *  Check feedback code
     ************************************************
        IF Severity > 0
           DISPLAY "Call to CEESCOL failed. " Msg-No
           STOP RUN
        END-IF.

     ************************************************
     *  Check result of compare
     ************************************************
        EVALUATE TRUE
           WHEN Result < 0
              DISPLAY "1st string < 2nd string."
           WHEN Result > 0
              DISPLAY "1st string > 2nd string."
           WHEN OTHER
              DISPLAY "Strings are identical."
        END-EVALUATE.

        STOP RUN.
      END PROGRAM COBSCOL.
```

Calls to CEESCOL in PL/I

```
*PROCESS MACRO;
 /*Module/File Name: IBMSCOL                          */
 /***************************************************/
 /* Example for callable service CEESCOL            */
 /* Function: Compare two character strings and     */
 /*  print the result.                              */
 /***************************************************/

 PLISCOL: PROC OPTIONS(MAIN);

 %INCLUDE CEEIBMAW; /* ENTRY defs, macro defs for LE */
 %INCLUDE CEEIBMCT; /* FBCHECK macro, FB constants   */
 %INCLUDE CEEIBMLC; /* Locale category constants     */

 /* CEESCOL service call arguments */
 DCL STRING1 CHAR(256) VARYING;/* first string       */
 DCL STRING2 CHAR(256) VARYING;/* second string      */
 DCL RESULT_SCOL BIN FIXED(31);/* result of compare  */

 DCL 01 FC,                         /* Feedback token */
        03 MsgSev    REAL FIXED BINARY(15,0),
        03 MsgNo     REAL FIXED BINARY(15,0),
        03 Flags,
           05 Case      BIT(2),
           05 Severity  BIT(3),
           05 Control   BIT(3),
        03 FacID     CHAR(3),         /* Facility ID */
        03 ISI      /* Instance-Specific Information */
                     REAL FIXED BINARY(31,0);

   STRING1 = '12345a789';
   STRING2 = '12346$789';
   CALL CEESCOL( *, STRING1, STRING2, RESULT_SCOL,FC);
```

```
  /* FBCHECK macro used (defined in CEEIBMCT) */
  IF FBCHECK( FC, CEE3T1 ) THEN
    DO;
      DISPLAY ('CEESCOL not completed '||FC.MsgNo );
      STOP;
    END;

  SELECT;
  WHEN( RESULT_SCOL < 0 )
    PUT SKIP LIST(
      '"firststring" is less than "secondstring" ');
  WHEN( RESULT_SCOL > 0 )
    PUT SKIP LIST(
    '"firststring" is greater than "secondstring" ');
  OTHERWISE
    PUT SKIP LIST( 'Strings are identical' );
  END;  /* END SELECT */

END PLISCOL;
```

Example calls to CEESETL and CEEQRYL

The following examples illustrate calls to CEESETL to set the locale, and to CEEQRYL to retrieve locale time information.

Calls to CEESETL and CEEQRYL in COBOL

```
       CBL LIB,QUOTE
      *Module/File Name: IGZTSETL
      ************************************************
      *  Example for callable service CEESETL         *
      *   COBSETL - Set all global locale environment *
      *             categories to country Sweden.    *
      *            Query one category.               *
      ************************************************
       IDENTIFICATION DIVISION.
       PROGRAM-ID.  COBSETL.
       DATA DIVISION.
       WORKING-STORAGE SECTION.
       01  Locale-Name.
           02  LN-Length  PIC S9(4) BINARY.
           02  LN-String  PIC X(256).
       01  Locale-Time.
           02  LT-Length  PIC S9(4) BINARY.
           02  LT-String  PIC X(256).
      * Use Locale category constants
       COPY CEEIGZLC.
      *
       01  FC.
           02  Condition-Token-Value.
           COPY CEEIGZCT.
               03  Case-1-Condition-ID.
                   04  Severity    PIC S9(4) BINARY.
                   04  Msg-No      PIC S9(4) BINARY.
               03  Case-2-Condition-ID
                         REDEFINES Case-1-Condition-ID.
                   04  Class-Code  PIC S9(4) BINARY.
                   04  Cause-Code  PIC S9(4) BINARY.
               03  Case-Sev-Ctl    PIC X.
               03  Facility-ID     PIC XXX.
           02  I-S-Info            PIC S9(9) BINARY.
      *
       PROCEDURE DIVISION.
      ************************************************
      *  Set up locale name for Sweden
      ************************************************
           MOVE 14 TO LN-Length.
```

```
           MOVE 'Sv_SE.IBM-1047'
                   TO LN-String (1:LN-Length).

      ************************************************
      *  Set all locale categories to Sweden
      *  Use LC-ALL category constant from CEEIGZLC
      ************************************************
           CALL 'CEESETL' USING Locale-Name, LC-ALL,
                                FC.
      ************************************************
      *  Check feedback code
      ************************************************
           IF Severity > 0
              DISPLAY 'Call to CEESETL failed. ' Msg-No
              STOP RUN
           END-IF.

      ************************************************
      *  Retrieve active locale for LC-TIME category
      ************************************************
           CALL 'CEEQRYL' USING LC-TIME, Locale-Time,
                                FC.

      ************************************************
      *  Check feedback code and correct locale
      ************************************************
           IF Severity = 0
              IF LT-String(1:LT-Length) =
                       LN-String(1:LN-Length)
                 DISPLAY 'Successful query.'
              ELSE
                 DISPLAY 'Unsuccessful query.'
              END-IF
           ELSE
              DISPLAY 'Call to CEEQRYL failed. ' Msg-No
           END-IF.

           STOP RUN.
       END PROGRAM COBSETL.
```

Calls to CEESETL and CEEQRYL in PL/I

```
*PROCESS MACRO;
 /*Module/File Name: IBMSETL                          */
 /*************************************************/
 /* Example for callable service CEESETL             */
 /* Function: Set all global locale environment      */
 /*  categories to country. Query one category.      */
 /*************************************************/

 PLISETL: PROC OPTIONS(MAIN);

 %INCLUDE CEEIBMAW; /* ENTRY defs, macro defs        */
 %INCLUDE CEEIBMCT; /* FBCHECK macro, FB constants   */
 %INCLUDE CEEIBMLC; /* Locale category constants     */

 /* CEESETL service call arguments */
 DCL LOCALE_NAME CHAR(14) VARYING;

 /* CEEQRYL service call arguments */
 DCL LOCALE_NAME_TIME CHAR(256) VARYING;
 DCL 01 FC,                        /* Feedback token */
        03 MsgSev    REAL FIXED BINARY(15,0),
        03 MsgNo     REAL FIXED BINARY(15,0),
        03 Flags,
           05 Case      BIT(2),
           05 Severity  BIT(3),
           05 Control   BIT(3),
```

```
     03 FacID     CHAR(3),       /* Facility ID */
     03 ISI      /* Instance-Specific Information */
                  REAL FIXED BINARY(31,0);
/* init locale name with IBM default for Sweden  */
LOCALE_NAME = 'Sv_SE.IBM-1047';

/* use LC_ALL category const from CEEIBMLC */
CALL CEESETL ( LOCALE_NAME, LC_ALL, FC );

/* FBCHECK macro used (defined in CEEIBMCT) */
IF FBCHECK( FC, CEE2KE ) THEN
  DO;  /* invalid locale name */
    DISPLAY ( 'Locale LC_ALL Call '||FC.MsgNo );
    STOP;
  END;
/* retrieve active locale for LC_TIME category */
/* use LC_TIME category const from CEEIBMLC */
CALL CEEQRYL ( LC_TIME, LOCALE_NAME_TIME, FC );

IF FBCHECK( FC, CEE000 ) THEN
  DO;  /* successful query, check category name */
    IF LOCALE_NAME_TIME ^= LOCALE_NAME THEN
      DO;
        DISPLAY ( 'Invalid LOCALE_NAME_TIME ' );
        STOP;
      END;
    ELSE
      DO;
        PUT SKIP LIST('Successful query LC_TIME',
                      LOCALE_NAME_TIME);
      END;
  END;
ELSE
  DO;
    DISPLAY ( 'LC_TIME Category Call '||FC.MsgNo );
    STOP;
  END;
END PLISETL;
```

Example calls to CEEQRYL and CEESTXF

The following examples illustrate calls to CEEQRYL to retrieve the locale name, and to CEESTXF to translate a string into its collation weights.

Calls to CEEQRYL and CEESTXF in COBOL

```
      CBL LIB,QUOTE
     *Module/File Name: IGZTSTXF
     ************************************************
     * Example for callable service CEESTXF         *
     *  COBSTXF - Query current collate category and *
     *            build input string as function of *
     *            locale name.                      *
     *           Translate string as function of    *
     *            locale.                           *
     *  Valid only for COBOL for MVS & VM Release 2  *
     *  or later.                                    *
     ************************************************
      IDENTIFICATION DIVISION.
      PROGRAM-ID.  COBSTXF.
      DATA DIVISION.
      WORKING-STORAGE SECTION.
      01  MBS.
          02  MBS-Length  PIC S9(4) BINARY.
          02  MBS-String  PIC X(10).
      01  TXF.
          02  TXF-Length  PIC S9(4) BINARY.
```

```
     02  TXF-String  PIC X(256).
 01  Locale-Name.
     02  LN-Length  PIC S9(4) BINARY.
     02  LN-String  PIC X(256).
* Use Locale category constants
 COPY CEEIGZLC.
*
 01  MBS-Size    PIC S9(9)  BINARY  VALUE 0.
 01  TXF-Size    PIC S9(9)  BINARY  VALUE 0.
 01  FC.
     02  Condition-Token-Value.
     COPY CEEIGZCT.
         03  Case-1-Condition-ID.
             04  Severity    PIC S9(4) BINARY.
             04  Msg-No      PIC S9(4) BINARY.
         03  Case-2-Condition-ID
                   REDEFINES Case-1-Condition-ID.
             04  Class-Code  PIC S9(4) BINARY.
             04  Cause-Code  PIC S9(4) BINARY.
         03  Case-Sev-Ctl    PIC X.
         03  Facility-ID     PIC XXX.
     02  I-S-Info            PIC S9(9) BINARY.
*
 PROCEDURE DIVISION.
************************************************
*  Call CEEQRYL to retrieve locale name
************************************************
     CALL "CEEQRYL" USING LC-COLLATE,
                          Locale-Name, FC.
************************************************
*  Check feedback code and set input string
************************************************
     IF Severity = 0
        IF LN-String (1:LN-Length) =
              "Sv-SE.IBM-1047"
           MOVE 10 TO MBS-Length
           MOVE 10 TO MBS-Size
           MOVE "7,123,456."
                    TO MBS-String (1:MBS-Length)
        ELSE
           MOVE 7 TO MBS-Length
           MOVE 7 TO MBS-Size
           MOVE "8765432"
                  TO MBS-String (1:MBS-Length)
        END-IF
     ELSE
        DISPLAY "Call to CEEQRYL failed. " Msg-No
        STOP RUN
     END-IF.
     MOVE SPACES TO TXF-String.
     MOVE 0 to TXF-Length.

************************************************
*  Call CEESTXF to translate the string
************************************************
     CALL "CEESTXF" USING OMITTED, MBS, MBS-Size,
                          TXF, TXF-Size, FC.

************************************************
*  Check feedback code and return length
************************************************
     IF Severity = 0
        IF TXF-Length > 0
           DISPLAY "Translated string is "
                   TXF-String
        ELSE
           DISPLAY "String not translated."
```

```
            END-IF
         ELSE
            DISPLAY "Call to CEESTXF failed. " Msg-No
         END-IF.

         STOP RUN.
      END PROGRAM COBSTXF.
```

Calls to CEEQRYL and CEESTXF in PL/I

```
*PROCESS MACRO;
 /*Module/File Name: IBMSTXF                          */
 /***************************************************/
 /* Example for callable service CEESTXF            */
 /* Function: Query current collate category and    */
 /*   build input string as function of locale name. */
 /*   Translate string as function of locale.       */
 /***************************************************/

 PLISTXF: PROC OPTIONS(MAIN);

 %INCLUDE CEEIBMAW; /* ENTRY defs, macro defs       */
 %INCLUDE CEEIBMCT; /* FBCHECK macro, FB constants  */
 %INCLUDE CEEIBMLC; /* Locale category constants    */
 /* CEESTXF service call arguments */
 DCL MBSTRING  CHAR(10) VARYING;   /* input string   */
 DCL MBNUMBER  BIN FIXED(31);      /* input length   */
 DCL TXFSTRING CHAR(256) VARYING;  /* output string  */
 DCL TXFLENGTH BIN FIXED(31);      /* output length  */

 /* CEEQRYL service call arguments */
 DCL LOCALE_NAME_COLLATE CHAR(256) VARYING;

 DCL 01 FC,                        /* Feedback token */
        03 MsgSev    REAL FIXED BINARY(15,0),
        03 MsgNo     REAL FIXED BINARY(15,0),
        03 Flags,
           05 Case      BIT(2),
           05 Severity  BIT(3),
           05 Control   BIT(3),
        03 FacID     CHAR(3),       /* Facility ID */
        03 ISI      /* Instance-Specific Information */
                     REAL FIXED BINARY(31,0);
   /* retrieve active locale for collate category */
   /* Use LC_COLLATE category const from CEEIBMLC */
   CALL CEEQRYL ( LC_COLLATE, LOCALE_NAME_COLLATE, FC);

   /* FBCHECK macro used (defined in CEEIBMCT) */
   IF FBCHECK( FC, CEE000 ) THEN
     DO; /* successful query, set string for CEESTXF */
       IF LOCALE_NAME_COLLATE = 'Sv_SE.IBM-1047' THEN
           MBSTRING = '7,123,456.';
       ELSE
           MBSTRING = '8765432';

       MBNUMBER = LENGTH(MBSTRING);
     END;
   ELSE
     DO;
       DISPLAY ( 'Locale LC_COLLATE  '||FC.MsgNo );
       STOP;
     END;

   TXFSTRING = '';
   CALL CEESTXF ( *, MBSTRING, MBNUMBER,
                     TXFSTRING, TXFLENGTH, FC );

   IF FBCHECK( FC, CEE000 ) THEN
```

```
    DO; /* successful call, use transformed length */
      IF TXFLENGTH >0 THEN
        DO;
          PUT SKIP LIST( 'Transformed string is '||
                  SUBSTR(TXFSTRING,1, TXFLENGTH) );
        END;
    END;
  ELSE
    DO;
      IF FBCHECK( FC, CEE3TF ) THEN
        DO;
          DISPLAY ( 'Zero length input string' );
        END;
    END;

END PLISTXF;
```

Chapter 23. General callable services

This topic describes the set of Language Environment callable services that provide general services.

List of the general callable services

The general callable services are a set of callable services that are not directly related to a specific Language Environment function.

Related callable services:

CEE3DLY
Suspends processing of an active enclave for a specified number of seconds up to a maximum of 1 hour.

CEE3DMP
Generates a dump of the Language Environment runtime environment and member language libraries

CEE3USR
Sets or queries one of two 4-byte fields known as the user area fields

CEEDLYM
Suspends processing of an active enclave for a specified number of milliseconds up to a maximum of 1 hour.

CEEGPID
Retrieves Language Environment version and platform ID

CEEGTJS
Retrieves the value of an exported JCL symbol.

CEE3INF
Returns information about the current enclave to the calling routine

CEERAN0
Generates a sequence of uniform pseudorandom numbers between 0.0 and 1.0

CEEENV
CEEENV is a language neutral callable service to get, set, clear, and unset Language Environment variables.

CEETEST
Invokes a debug tool, such as the Debug Tool

See *z/OS Language Environment Programming Reference* for syntax information for callable services.

CEE3DMP callable service

CEE3DMP generates a dump of Language Environment and the member language libraries. Sections of the dump are selectively included, depending on options specified with the *options* parameter. Output from CEE3DMP is written to the default ddname CEEDUMP, unless you specify the ddname of another file by using the FNAME option of CEE3DMP. The call to CEE3DMP does not cause your

© Copyright IBM Corp. 1991, 2015

application to terminate. For an example of a dump and a description of the Language Environment dump service, see *z/OS Language Environment Debugging Guide*.

CEE3DMP can be called by your application when you want:
- A trace of calls so you can see the order in which applications were called
- A dump of storage and control blocks
- The status of files to determine if a file is open or closed and to see the buffer contents of the file

If your application runs in a non-`fork()` address space, the CEEDUMP DD statement specifies the name of the dump file. If your application runs in the z/OS UNIX environment, CEEDUMP DD can contain the PATH= keyword, which specifies the fully qualified z/OS UNIX path and file name.

Specifying a target directory for CEEDUMPs

If your application runs in an address space for which you issued a `fork()` and the CEEDUMP DD data set has not been dynamically allocated, the dump is directed according to the following order:

1. The directory found in environment variable _CEE_DMPTARG
2. Your current working directory, if it is not the root directory (/), and if this directory is writable, and if the CEEDUMP pathname (made up of the cwd pathname plus the ceedump file name) does not exceed 1024 characters
3. The directory found in environment variable TMPDIR (which specifies the location of a temporary directory other than /tmp)
4. The /tmp directory

The name of the dump is now CEEDUMP (or the name specified in the FNAME option of CEE3DMP) suffixed with: date.time.process ID.

CEE3USR callable service

CEE3USR sets or queries one of two 4-byte fields known as the user area fields. The user area fields are associated with an enclave and are maintained on an enclave basis. A user area might be used by vendor or application programs to store a pointer to a global data area or to keep a recursion counter.

The Language Environment user area fields should not be confused with the PL/I user area. The PL/I user area is a 4-byte field in the PL/I TCA and can only be accessed through assembler language. The PL/I user area continues to be supported for compatibility.

CEEGPID callable service

CEEGPID retrieves the Language Environment version ID and the platform ID. The version ID returned by CEEGPID can be tested to determine if you can use new or extended functions that are available in a particular release of Language Environment. For example, POSIX, ENVAR, and CEE3CIB are functions available in Release 3. Before using any of these functions, you can test the Language Environment version to make sure you are running on the release of Language Environment that supports them.

CEEGTJS callable service

CEEGTJS retrieves the value of an exported JCL symbol.

CEERAN0 callable service

CEERAN0 generates a sequence of uniform pseudo-random numbers between 0.0 and 1.0 using the multiplicative congruential method with a user-specified seed. The numbers generated are pseudorandom in that the same numbers are generated if the same seed key is used.

CEEENV callable service

CEEENV is a language neutral callable service to get, set, clear, and unset environment variables.

CEEENV processes environment variables depending upon the input function code as follows:

- Obtain the value for an existing environment variable
- Create a new environment variable with a value
- Clear all environment variables
- Delete an existing environment variable
- Overwrite the value for an existing environment variable.

CEE3DLY callable service

CEE3DLY suspends processing of an active enclave for a specified number of seconds up to a maximum of 1 hour.

CEEDLYM callable service

CEEDLYM suspends processing of an active enclave for a specified number of milliseconds up to a maximum of 1 hour.

CEETEST callable service

CEETEST invokes a debug tool, such as the IBM Debug Tool. You can use a debug tool to monitor, trace, and interact with your application while it runs. The invocation is dynamic; the debug tool starts when errors are encountered, so you do not have to run your application under an active debug tool.

The z/OS UNIX *dbx* Debugging Feature, as well as the IBM Debug Tool, can be used to debug z/OS XL C/C++ applications that run with POSIX(ON).

Using basic callable services

If you plan to use a Language Environment callable service, you must code a call to the service in your source code, then recompile your source under the latest Language Environment-conforming version of the language you are writing in. The standard call to a Language Environment service is different in each language, but does not differ across operating systems.

The following examples illustrate how the CEEFMDT callable service is called in C, C++, PL/I, and COBOL. CEEFMDT sets the default date and time formats for a specified country. In the examples, `country` is a 2-character fixed-length string representing a Language Environment-defined country code. Picture string (`pic_str` or `PICSTR`) is a character string, containing the default date and time for the country, that is returned by CEEFMDT. A feedback code (`fc`) returned from the service is checked to determine if the service completed correctly.

```
/*Module/File Name:  EDCSTRT  */
/*****************************************************************/
/*                                                               */
/*  Function:  CEEFMDT - Obtain default date and time format     */
/*                                                               */
/*****************************************************************/

#include <stdio.h>
#include <string.h>
#include <stdlib.h>
#include <leawi.h>
#include <ceeedcct.h>

int main(void) {

   _FEEDBACK fc;
   _CHAR2 country;
   _CHAR80 date_pic;

   /* get the default date and time format for Canada */
   memcpy(country,"CA",2);
   CEEFMDT(country,date_pic,&fc);
   if ( _FBCHECK ( fc , CEE000 ) != 0 ) {
      printf("CEEFMDT failed with message number %d\n",
             fc.tok_msgno);
      exit(2999);
   }
   /* print out the default date and time format */
   printf("%.80s\n",date_pic);
}
```

Figure 91. z/OS XL C/C++ routine with a call to CEEFMDT

```
CBL LIB,QUOTE
      *Module/File Name: IGZTSTRT
      ************************************************
      **                                            **
      ** CBLFMDT - Call CEEFMDT to obtain default    **
      **           date & time format               **
      **                                            **
      ************************************************
       IDENTIFICATION DIVISION.
       PROGRAM-ID. CBLFMDT.

       DATA DIVISION.
       WORKING-STORAGE SECTION.
       01  COUNTRY                 PIC X(2).
       01  PICSTR                  PIC X(80).
       01  FC.
           02  Condition-Token-Value.
           COPY  CEEIGZCT.
               03  Case-1-Condition-ID.
                   04  Severity    PIC S9(4) BINARY.
                   04  Msg-No      PIC S9(4) BINARY.
               03  Case-2-Condition-ID
                         REDEFINES Case-1-Condition-ID.
                   04  Class-Code  PIC S9(4) BINARY.
                   04  Cause-Code  PIC S9(4) BINARY.
               03  Case-Sev-Ctl    PIC X.
               03  Facility-ID     PIC XXX.
           02  I-S-Info            PIC S9(9) BINARY.

       PROCEDURE DIVISION.
       PARA-CBLFMDT.
      ************************************************
      ** Specify country code for the US             **
      ************************************************
           MOVE "US" TO COUNTRY.
      ************************************************
      ** Call CEEFMDT to return the default date and  **
      **     time format for the US                   **
      ************************************************
           CALL "CEEFMDT" USING COUNTRY, PICSTR, FC.

      ************************************************
      ** If CEEFMDT runs successfully, display result.**
      ************************************************
           IF CEE000 of FC THEN
               DISPLAY "The default date and time "
                   "format for the US is: " PICSTR
           ELSE
               DISPLAY "CEEFMDT failed with msg "
                   Msg-No of FC UPON CONSOLE
               STOP RUN
           END-IF.

           GOBACK.
```

Figure 92. COBOL program with a call to CEEFMDT

```
*PROCESS MACRO;
 /*Module/File Name: IBMSTRT
 /*****************************************/
 /**                                     **/
 /** Function: CEEFMDT - obtain default  **/
 /**                    date & time format **/
 /**                                     **/
 /*****************************************/

 PLIFMDT: PROC OPTIONS(MAIN);

    %INCLUDE  CEEIBMAW;
    %INCLUDE  CEEIBMCT;

    DCL COUNTRY CHARACTER ( 2 );
    DCL PICSTR  CHAR(80);
    DCL 01 FC,                      /* Feedback token */
           03 MsgSev    REAL FIXED BINARY(15,0),
           03 MsgNo     REAL FIXED BINARY(15,0),
           03 Flags,
              05 Case      BIT(2),
              05 Severity  BIT(3),
              05 Control   BIT(3),
           03 FacID     CHAR(3),    /* Facility ID */
           03 ISI                   /* Instance-Specific Information */
                        REAL FIXED BINARY(31,0);

    COUNTRY = 'US'; /* Specify country code for     */
                    /* the United States            */

    /* Call CEEFMDT to get default date format      */
    /*    for the US                                */
    CALL CEEFMDT ( COUNTRY , PICSTR , FC );

    /* Print default date format for the US         */
    IF  FBCHECK( FC, CEE000)  THEN  DO;
       PUT SKIP LIST( 'The default date and time '
          || 'format for the US is ' || PICSTR );
       END;
    ELSE  DO;
       DISPLAY( 'CEEFMDT failed with msg '
          || FC.MsgNo );
       STOP;
       END;


 END PLIFMDT;
```

Figure 93. PL/I routine with a call to CEEFMDT

See *z/OS Language Environment Programming Reference* for detailed instructions on how to call Language Environment services and for more information about the CEEFMDT callable service.

Chapter 24. Math services

This topic introduces Language Environment math services and describes the call interface to the math services.

What Language Environment math services does

Language Environment math services provide standard math computations and can be called from Language Environment-conforming languages or from Language Environment-conforming assembler routines.

You can invoke Language Environment math services by using the call interface or by using the C, COBOL, Fortran, or PL/I built-in math functions specific to the HLL used in your application. For example, your COBOL program can continue to use the built-in SIN function without having to be recoded to use the CEESxSIN call interface.

Language Environment provides several bit manipulation routines to support existing Fortran functions. The scalar versions of Language Environment bit manipulation routines can be called from programs written in any language. For more information on using bit manipulation routines, see *z/OS Language Environment Programming Reference*.

Related services

Math services:

CEESxABS
Absolute value

CEESxACS
Arccosine

CEESxASN
Arcsine

CEESxATH
Hyperbolic arctangent

CEESxATN
Arctangent

CEESxAT2
Arctangent of two arguments

CEESxCJG
Conjugate complex

CEESxCOS
Cosine

CEESxCSH
Hyperbolic cosine

CEESxCTN
Cotangent

CEESxDIM
Positive difference

© Copyright IBM Corp. 1991, 2015

CEESxDVD
Division

CEESxERC
Error function complement

CEESxERF
Error function

CEESxEXP
Exponential (base e)

CEESxGMA
Gamma function

CEESxIMG
Imaginary part of a complex

CEESxINT
Truncation

CEESxLGM
Log gamma function

CEESxLG1
Logarithm base 10

CEESxLG2
Logarithm base 2

CEESxLOG
Logarithm base e

CEESxMLT
Floating-point complex multiplication

CEESxMOD
Modular arithmetic

CEESxNIN
Nearest integer

CEESxNWN
Nearest whole number

CEESxSGN
Transfer of sign

CEESxSIN
Sine

CEESxSNH
Hyperbolic sine

CEESxSQT
Square root

CEESxTAN
Tangent

CEESxTNH
Hyperbolic tangent

CEESxXPx
Exponential (**)

Bit manipulation routines:
CEESICLR
Bit clear
CEESISET
Bit set
CEESISHF
Bit shift
CEESITST
Bit test

See *z/OS Language Environment Programming Reference* for syntax and examples of the math services and bit manipulation routines.

Call interface to math services

The syntax for math services has two forms, depending on how many input parameters the routine requires. The first four letters of the math services are always CEES. The fifth character is *x*, which you replace according to the parameter types listed in "Parameter types: parm1 type and parm2 type." The last three letters indicate the math function performed. In these examples, the function performed is the absolute value (ABS).

One Parameter

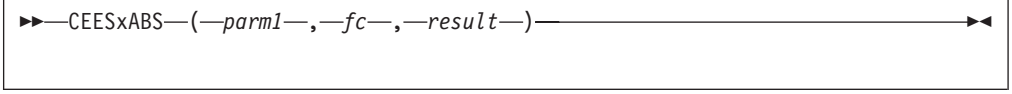

Two Parameters

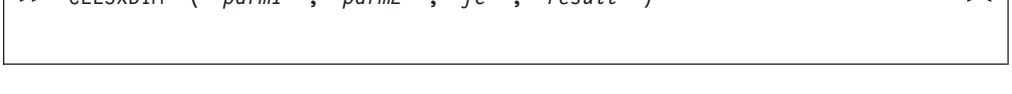

Parameter types: parm1 type and parm2 type

The first parameter (*parm1*) is mandatory. The second parameter (*parm2*) is used only when you use a math service with two parameters. The *x* in the fifth space of CEESx must be replaced by a parameter type for input and output. Substitute I, S, D, Q, T, E, or R for *x*:

I 32-bit binary integer
S 32-bit single floating-point number
D 64-bit double floating-point number
Q 128-bit extended floating-point number
T 32-bit single floating-complex number (comprised of a 32-bit real part and a 32-bit imaginary part)
E 64-bit double floating-complex number (comprised of a 64-bit real part and a 64-bit imaginary part)
R 128-bit extended floating-complex number (comprised of a 128-bit real part and a 128-bit imaginary part)

Language Environment math services expect normalized input. Unless otherwise noted, the result has the same parameter type as the input argument. (For

functions of complex variables, the image of the input is generally a nonrectangular shape. For this reason, the output range is not provided.) In the routines described in this topic, the output range for complex-valued functions can be determined from the input range.

C, C++, COBOL, Fortran, and PL/I offer built-in math functions that you can also use under Language Environment.

Simulation of extended-precision floating-point arithmetic is not supported in PL/I routines under CICS.

Examples of calling math services

The following examples illustrate calls to the CEESSLOG math service to calculate the logarithm base e of an argument.

Calling CEESSLOG in C and C++

```
/*Module/File Name:  EDCMATH  */
/************************************************************/
/*                                                          */
/* This routine demonstrates calling the math service       */
/* CEESSLOG in C/370                                        */
/************************************************************/

#include <string.h>
#include <stdio.h>
#include <stdlib.h>
#include <leawi.h>
#include <ceeedcct.h>

int main (void) {

  float int1, intr;

  _FEEDBACK fc;

  int1 = 39;
  CEESSLOG(&int1,&fc,&intr);
  if ( _FBCHECK ( fc , CEE000 ) != 0 )
  {
     printf("CEESSLOG failed with message number %d\n",
            fc.tok_msgno);
     exit(2999);
  }

  printf("Log base e of %f is %f\n",int1,intr);
}
```

Figure 94. C/C++ call to CEESSLOG — Logarithm base e

Calling CEESSLOG in COBOL

```
CBL LIB,QUOTE
      ***********************************************
      *Module/File Name: IGZTMATH
      ************************************************************
      **                                                        **
      ** Demonstrates the CEESSLOG math service in COBOL.       **
      **                                                        **
      ************************************************************
       IDENTIFICATION DIVISION.
       PROGRAM-ID. MTHSLOG.
       DATA DIVISION.
       WORKING-STORAGE SECTION.
       01  ARG1RS    COMP-1.
       01  RESLTRS   COMP-1.
       01  FC.
           02  Condition-Token-Value.
           COPY  CEEIGZCT.
               03  Case-1-Condition-ID.
                   04  Severity    PIC S9(4) BINARY.
                   04  Msg-No      PIC S9(4) BINARY.
               03  Case-2-Condition-ID
                         REDEFINES Case-1-Condition-ID.
                   04  Class-Code  PIC S9(4) BINARY.
                   04  Cause-Code  PIC S9(4) BINARY.
               03  Case-Sev-Ctl    PIC X.
               03  Facility-ID     PIC XXX.
           02  I-S-Info            PIC S9(9) BINARY.

       PROCEDURE DIVISION.

       PARA-MTHSLOG.

           MOVE 5.65 TO ARG1RS.
           CALL "CEESSLOG" USING ARG1RS, FC, RESLTRS.
      ************************************************
      ** If CEESSLOG runs successfully, display result.**
      ************************************************
           IF  CEE000 of FC  THEN
              DISPLAY "SLOG OF " ARG1RS " = " RESLTRS
           ELSE
              DISPLAY "CEESSLOG failed with msg "
                   Msg-No of FC UPON CONSOLE
              STOP RUN
           END-IF.

           GOBACK.
```

Figure 95. Call to CEESSLOG — Logarithm base e in COBOL

Calling CEESSLOG in PL/I

```
*PROCESS MACRO;
  /*Module/File Name: IBMMATH            */
      /*************************************************************/
      /*                                                           */
      /* Demonstrates the CEESSLOG math service in PL/I.           */
      /*                                                           */
      /*************************************************************/

 MTHSLOG: PROC OPTIONS(MAIN);

    %INCLUDE  CEEIBMAW;
    %INCLUDE  CEEIBMCT;

    DCL 01 FC,                      /* Feedback token */
           03 MsgSev    REAL FIXED BINARY(15,0),
           03 MsgNo     REAL FIXED BINARY(15,0),
           03 Flags,
              05 Case      BIT(2),
              05 Severity  BIT(3),
              05 Control   BIT(3),
           03 FacID     CHAR(3),    /* Facility ID */
           03 ISI                   /* Instance-Specific Information */
                        REAL FIXED BINARY(31,0);
    DCL ARG1   REAL FLOAT DECIMAL(6) INIT(5.65);
    DCL RESULT REAL FLOAT DECIMAL(6);

    CALL CEESSLOG (ARG1, FC, RESULT);
    IF  FBCHECK( FC, CEE000)  THEN
       PUT SKIP LIST( 'SLOG OF ' || ARG1 || ' is ' || RESULT );
    ELSE
       PUT SKIP LIST( 'CEESLOG failed with msg '|| FC.MsgNo );

 END MTHSLOG;
```

Figure 96. Call to CEESSLOG — Logarithm base e in PL/I

Part 4. Using interfaces to other products

This section describes how to use Language Environment with applications that run under CICS, DB2, and IMS.

For a list of products that are compatible with Language Environment, see *z/OS Language Environment Runtime Application Migration Guide* or *z/OS Language Environment Concepts Guide*.

© Copyright IBM Corp. 1991, 2015

Chapter 25. Running applications under CICS

Language Environment provides support that, when used in conjunction with facilities provided by the Customer Information Control System (CICS) product, permits you to write applications in high-level languages and run them in a CICS environment. Some of the Language Environment-conforming HLLs might require a later version of CICS. Check the required software list for each language you plan to use.

You can code an application that runs in a CICS environment in Language Environment-conforming assembler, C, C++, COBOL, or PL/I. There is no support for any Fortran routines under CICS. Also, Language Environment-conforming assembler main routines are supported back to z/OS V1R4 when running with CICS transaction Server for z/OS Version 3.1 or later. There is no such restriction on the use of assembler subroutines.

This topic describes special features and considerations that apply to Language Environment-conforming applications running in a CICS environment.

Applications running with POSIX(ON) are only supported in a CICS OTE environment. If you try running an application with POSIX(ON) under non-OTE CICS, it will be overridden with POSIX(OFF) and execution continues. For more information about XPLINK under CICS, go to the IBM Knowledge Center at http://publib.boulder.ibm.com/infocenter/cicsts/v3r1/index.jsp .

Applications compiled with the XPLINK compiler option are not supported under CICS on releases earlier than CICS TS 3.1. The XPLINK runtime option is ignored under CICS.

CICS does not support PL/I MTF applications.

Terminology used in the Language Environment program model

Before discussing how to develop and run Language Environment-conforming applications in a CICS environment, it is important to map familiar CICS terminology to the terminology used in the Language Environment program model described in Chapter 13, “Program management model,” on page 161.

CICS region

A CICS region is a fixed-size subdivision of main storage allocated to a job step or system task. For example, a CICS region is established during CICS initialization (start-up job). Initialization of a region creates a common environment for all CICS transactions running in that environment. There are no unique Language Environment services that can be applied at a region level.

CICS transaction

A CICS transaction is initiated by a single request, usually from a terminal. A CICS transaction is equivalent to a Language Environment process. A Language Environment process consists of one or more enclaves that carry out the needed processing when they are run. When a CICS transaction is initiated, the first Language Environment thread is triggered within the first enclave in the Language Environment process.

© Copyright IBM Corp. 1991, 2015

For example, the insertion of a bank card into an ATM machine might trigger a Language Environment process (CICS transaction) consisting of one or more enclaves (CICS run units) to read the information on the card. After an ATM machine reads a bank card, the validation of the information on the card might be performed by one enclave, processing the user's personal ID number might be performed by another enclave, processing a user request by another, and dispensing the cash by a final enclave.

CICS run unit

A CICS run unit consists of a bound set of one or more load modules that can be loaded by the CICS program loader. Run units are equivalent to Language Environment enclaves. Any link-edited load module is an enclave in CICS; each enclave has its own entry in the CICS PPT. Under CICS, it is possible for a single enclave to have multiple load modules link-edited with separate entries in the PPT. Each enclave has its own heap storage and other Language Environment resources associated with it.

An enclave is invoked when a Language Environment process (CICS transaction) is triggered or when it is passed control from another enclave using the EXEC CICS LINK or EXEC CICS XCTL commands. For details on using EXEC CICS LINK or EXEC CICS XCTL commands, see "Creating child enclaves with EXEC CICS LINK or EXEC CICS XCTL" on page 526.

Running Language Environment applications under CICS

The following steps describe basic application execution under CICS:

1. An event, generally the receipt of an input message containing a transaction ID code, triggers a Language Environment process (CICS transaction).
2. CICS looks up the transaction ID code in the program control table (PCT) and gets the name of the enclave (or the first enclave) to execute the process.
3. CICS defines the process (transaction) as a work item that is dispatched by the CICS task dispatcher.
4. After the process is defined, CICS looks up the identity of the enclave required to perform the task in the processing program table (PPT). The PPT contains information about the enclave such as its language, whether it is in storage, and if in storage, its use count and entry point address.
5. CICS calls the Language Environment-CICS runtime level interface to initialize the process-related portions of the runtime environment.
6. If the enclave does not perform all the processing associated with the process, the enclave might pass control to another enclave through a language call or through the EXEC CICS LINK or EXEC CICS XCTL commands.
7. When the process is complete, CICS calls the Language Environment-CICS runtime level interface to terminate the process-related portions of the runtime environment.
8. IEEE binary and decimal floating-point are supported in a CICS environment only if CICS 4.1 or later is in use.

Developing an application under CICS

Certain coding restrictions apply when you develop an application to run under CICS. Examples are:

- Input/output restrictions — CICS provides its own I/O facilities using various EXEC CICS commands.

- Multitasking — CICS has its own multitasking capability.

After you code your application, you must run it through a *CICS translator*. The translator accepts as input an application containing EXEC CICS commands and produces as output an equivalent application in which each CICS command has been translated into the language of the source. The CICS translator runs in a separate job step. The job step sequence for preparing and running an application under CICS is:

1. Code
2. Translate
3. Compile
4. Prelink
5. Link-edit
6. Run

C coding restrictions are described in *z/OS XL C/C++ Programming Guide*. COBOL restrictions are discussed in the applicable version of the COBOL programming guide in the COBOL library at Enterprise COBOL for z/OS library (http://www-01.ibm.com/support/docview.wss?uid=swg27036733). Examples of PL/I coding restrictions under CICS are discussed in "PL/I coding considerations under CICS."

For more information about developing an application under CICS, go to the IBM Knowledge Center at http://publib.boulder.ibm.com/infocenter/cicsts/v3r1/index.jsp .

PL/I coding considerations under CICS

CICS imposes some coding restrictions on PL/I routines:

- MTF routines — CICS does not support PL/I MTF applications.
- Built-in subroutines — There are some restrictions on the use of PL/I's built-in subroutines:
  - You cannot use the PLISRT*x* interfaces, PLICKPT or PLICANC.
  - You can use PLIRETC and PLIRETV to communicate between user-written routines that are link-edited together, but not to communicate with CICS. See "Managing return codes in Language Environment" on page 153 for details.
- Debugging facilities — Support has been added to allow the CICS transaction to be debugged using the Debug Tool. To prepare your program to use the Debug Tool, you must compile with the TEST option. For more information on debugging under Language Environment, see *z/OS Language Environment Debugging Guide*. For more information on debugging CICS transactions using the Debug tool, go to dbugtwww .
- Language I/O facilities — You can use only a subset of PL/I I/O facilities under CICS.
  - OPEN/CLOSE can be used, but only for the SYSPRINT file
  - You can use stream output only to the SYSPRINT file. For performance reasons, you should use stream output under CICS only when debugging your applications.

  Those PL/I I/O facilities that you cannot use under CICS are:
  - Record I/O statements
  - Stream input
  - DISPLAY statement
  - DELAY statement
  - STOP statement

- WAIT statement
- PL/I I/O-related conditions such as RECORD, TRANSMIT, ENDFILE, and KEY are not raised under CICS, because I/O is not performed using PL/I files (except SYSPRINT) and I/O statements. CICS file-handling facilities are used instead. If CICS detects an I/O condition during the processing of your commands, CICS deals with the condition in the way defined in the CICS information.

Assembler considerations

When running with a release of CICS TS earlier than CICS TS 3.1, Language Environment-conforming assembler main routines are not supported under CICS.

Link-edit considerations under CICS

You can link-edit Language Environment-conforming applications that are to be executed under CICS as if they were MVS batch applications. If your C, C++, COBOL, or PL/I application uses EXEC CICS commands, however, you must also link-edit the EXEC CICS interface stub, DFHELII, with your application. To be link-edited with your application, DFHELII must be available in the link-edit SYSLIB concatenation; DFHELII is in the SDFHLOAD library. For more information, go to the IBM Knowledge Center at http://publib.boulder.ibm.com/infocenter/cicsts/v3r1/index.jsp .

C and C++ considerations

C and C++ applications must be link-edited AMODE(31), RMODE(ANY), as shown in "C/C++ AMODE/RMODE considerations" on page 14.

COBOL considerations

DFHELII is compatible with the DFHECI stub provided for COBOL programs. Although DFHECI is still supported under Language Environment, DFHELII offers some advantages. Whereas the old COBOL stub had to be link-edited at the top of your application, DFHELII can be linked anywhere in the application. You also have the capability of linking ILC applications with a single stub rather than with multiple stubs.

PL/I considerations

CEESTART is the only entry point for Enterprise PL/I for z/OS and PL/I for MVS & VM applications. To relink OS PL/I object modules with z/OS Language Environment, you must use the following linkage-editor statements:

```
INCLUDE SYSLIB(CEESTART)
INCLUDE SYSLIB(CEESG010)
INCLUDE SYSLIB(DFHELII)
REPLACE PLISTART
CHANGE  PLIMAIN(CEEMAIN)
INCLUDE objlib(objmod)
⋮
ORDER   CEESTART
ENTRY   CEESTART
NAME    loadmod(R)
```

where:

objlib Represents the PDS that contains the object code

objmod Represents the name of the object module

loadmod
Represents the name of the resultant load module

The INCLUDE statement for the object module must occur immediately after the CHANGE statement. The object module of the main procedure must be included before the object modules of subroutines, if any; this was not required for OS PL/I applications.

CICS processing program table (PPT) considerations

All of the routines that you dynamically call or fetch in your application must be defined in the CICS PPT. Previously, you had the following choices for the LANG option of the PPT entry: ASM, C, COBOL, and PLI.

Now, however, you can specify 'Language Environment' (Language Environment) as the language of any Language Environment-conforming routine. This can save you time when you replace a routine with one written in a different language, because you do not need to redefine the routine in the PPT. C++ programs and all Enterprise PL/I for z/OS CICS programs must specify LANG (Language Environment) for the PPT entry.

Specifying runtime options under CICS

Under CICS, you cannot pass runtime options as parameters when the application is invoked. However, you can specify runtime options for your application using one of the following methods:

- As system-level default options in a CEEPRMxx parmlib member. For more information, see *z/OS Language Environment Customization*.
- As CICS region-level default options established in CEEROPT. For more information about CEEROPT, see *z/OS Language Environment Customization*.
- In C++ programs, as static ILC to C modules that have a `#pragma runopts` statement
- As application defaults established in CEEUOPT (see "Creating application-specific runtime option defaults with CEEXOPT" on page 124 for details).
- In the user exit. For more information, (see "CEEBXITA assembler user exit interface" on page 427.
- In C applications, as options specified using `#pragma runopts` (see the description in "Methods available for specifying runtime options" on page 119 for information about `#pragma runopts`).
- In PL/I applications, as options specified using the PLIXOPT string (see the description in "Methods available for specifying runtime options" on page 119 for information about the PLIXOPT string).

Some runtime options have different defaults and exhibit slightly different behavior while executing under CICS. The options are listed in Table 57.

Table 57. Runtime option behavior under CICS

Option	Description
ABPERC	ABPERC is ignored.
ABTERMENC	ABTERMENC(ABEND) is the IBM-supplied default under CICS.
AIXBLD	AIXBLD is ignored.
ALL31	ALL31(ON) is the IBM-supplied default under CICS.

Table 57. Runtime option behavior under CICS (continued)

Option	Description
ANYHEAP	ANYHEAP(4K,4080,ANY,FREE) is the IBM-supplied default under CICS. Both the initial size and the increment size are rounded to the nearest multiple of 8 bytes. In addition, if ANYHEAP(0) is specified, the initial HEAP is obtained on the first use and will be based on the increment size. The maximum initial and increment size for ANYHEAP is 1 gigabyte (1024M).
ARGPARSE	ARGPARSE is ignored.
AUTOTASK	AUTOTASK is ignored.
BELOWHEAP	BELOWHEAP(4K,4080,FREE) is the IBM-supplied default under CICS. Both the initial size and the increment size are rounded to the nearest multiple of 8 bytes. In addition, if BELOWHEAP(0) is specified, then the initial HEAP is obtained on the first use and will be based on the increment size.
CBLOPTS	CBLOPTS is ignored.
CBLPSHPOP	ON is the IBM-supplied default under CICS.
CBLQDA	CBLQDA is ignored.
CHECK	ON is the IBM-supplied default under CICS.
COUNTRY	The value specified is user-defined.
DEBUG	DEBUG is ignored.
DEPTHCONDLMT	For C, COBOL, FORTRAN, and applications with multiple languages, the recommended value is 10. For PL/I, the recommended value is 0.
ENV	ENV is ignored.
ENVAR	ENVAR sets the initial value for environment variables. With ENVAR, you can pass switches or tagged information into the application using standard z/OS UNIX functions `getenv()`, `setenv()`, and `clearenv()`.
ERRCOUNT	ERRCOUNT(0) is the IBM-supplied default under CICS.
ERRUNIT	ERRUNIT is ignored.
EXECOPS	EXECOPS is ignored.
FILEHIST	FILEHIST is ignored.
FILETAG	FILETAG is ignored.
FLOW	NOFLOW is the IBM-supplied default under CICS.
HEAP	HEAP(4K,4080,ANY,KEEP,4K,4080) is the IBM-supplied default under CICS. Both the initial size and the increment size are rounded to the next multiple of 8 bytes. In addition, if HEAP(0) is specified, then the initial HEAP is obtained on the first use and will be based on the increment size. The maximum initial and increment size for HEAP is 1 gigabyte (1024M).
HEAPCHK	HEAPCHK(OFF,1,0,0,0,1024,0,1024,0) is the IBM-supplied default under CICS.
HEAPPOOLS	HEAPPOOLS(OFF,8,10,32,10,128,10,256,10,1024,10,2048,10,0,10,0,10,0,10,0,10,0,10,0,10) is the IBM-supplied default under CICS.
HEAPZONES	HEAPZONES(0,ABEND,0,ABEND) is the IBM-supplied default under CICS
INQPCOPN	INQPCOPN is ignored.
INTERRUPT	INTERRUPT is ignored.
LIBSTACK	LIBSTACK(32,4080,FREE) is the IBM-supplied default under CICS. Both the initial size and the increment size are rounded to the nearest multiple of 8 bytes. The minimum initial size is 32 bytes; the minimum increment size is 4080 bytes. When ALL31 is ON, LIBSTACK is not allocated below the 16M line.
MSGFILE	MSGFILE is ignored. All messages and output (dumps and reports, for example) are sent to a transient data queue called CESE (for more information, see "Runtime output under CICS" on page 409).

Table 57. Runtime option behavior under CICS (continued)

Option	Description
MSGQ	15 is the IBM-supplied default under CICS.
NATLANG	ENU is the IBM-supplied default under CICS.
NONIPTSTACK	NONIPTSTACK is ignored.
OCSTATUS	OCSTATUS is ignored.
PAGEFRAMESIZE	PAGEFRAMESIZE is ignored. Note the statement of direction associated with this runtime option.
PC	PC is ignored.
PLIST	PLIST is ignored.
PLITASKCOUNT	PLITASKCOUNT is ignored.
POSIX	POSIX is ignored.
PROFILE	PROFILE(OFF) is the IBM-supplied default under CICS.
PRTUNIT	PRTUNIT is ignored.
PUNUNIT	PUNUNIT is ignored.
RDRUNIT	RDRUNIT is ignored.
RECPAD	RECPAD is ignored.
REDIR	REDIR is ignored.
RTEREUS	RTEREUS is ignored.
SIMVRD	SIMVRD is ignored.
STACK	STACK(4K,4080,ANY,KEEP,,) is the IBM-supplied default under CICS.
STORAGE	STORAGE(NONE,NONE,NONE,0K) is the IBM-supplied default under CICS. Your application could require a different setting. For example, to initialize memory to zeros, use STORAGE(00,00,00).
TERMTHDACT	All TERMTHDACT output (including that from dumps) is written to a transient data queue named CESE.
TEST	NOTEST(ALL,*,PROMPT,INSPPREF) is the IBM-supplied default under CICS.
THREADHEAP	THREADHEAP is ignored.
THREADSTACK	THREADSTACK is ignored.
TRACE	TRACE(OFF,4K,DUMP,LE=0) is the IBM-supplied default under CICS.
TRAP	TRAP(ON,SPIE) is the IBM-supplied default under CICS.
UPSI	UPSI(00000000) is the IBM-supplied default under CICS.
USERHDLR	The specified value is user-defined.
VCTRSAVE	VCTRSAVE(OFF) is the IBM-supplied default under CICS.
XPLINK	XPLINK is ignored.
XUFLOW	XUFLOW(AUTO) is the IBM-supplied default under CICS.

Accessing DLI databases from CICS

Various user interfaces to DLI databases on IMS are available under CICS. See Appendix B, “EXEC DLI and CALL IMS Interfaces,” on page 559 for details.

Using callable services under CICS

All Language Environment callable services are available to applications executing as CICS transactions. However, the CEEMOUT (dispatch a message) and

CEE3DMP (generate dump) services differ, in that the messages and dumps are sent to a transient data queue called CESE rather than to the ddname specified in the MSGFILE runtime option. See *z/OS Language Environment Programming Reference* for descriptions of these services.

See *z/OS Language Environment Writing Interlanguage Communication Applications* for ILC examples that make a call to CEEMOUT.

OS/VS COBOL compatibility considerations under CICS

OS/VS COBOL programs, which had runtime support in CICS® Transaction Server for z/OS®, Version 2, cannot run under CICS TS for z/OS, Version 3.

Using math services in PL/I under CICS

Simulation of extended-precision floating-point arithmetic is not supported in PL/I routines under CICS.

PL/I saves and restores floating-point registers where necessary. PLIDUMP can print these registers (for more information about PLIDUMP, see *z/OS Language Environment Debugging Guide*).

Floating-point overflow and underflow can be handled in OVERFLOW and UNDERFLOW ON-units. The program mask is set appropriately for the levels of CICS and PL/I used.

Coding program termination in PL/I under CICS

You can terminate a PL/I routine running under CICS by using PL/I constructs or CICS statements such as EXEC CICS RETURN, EXEC CICS SEND PAGE RELEASE, EXEC CICS XCTL, or EXEC CICS ABEND. When the routine terminates, the following occurs:

1. If you requested a storage report using the RPTSTG runtime option, the report is written to the CESE transient data queue (described in "Runtime output under CICS" on page 409).
2. If CESE is still open, it is closed.
3. All storage acquired by PL/I is freed before control returns to CICS, except for the stack.

Storage management under CICS

Applications can allocate and free storage explicitly through language facilities, CICS facilities or the Language Environment storage management callable services. For more information about the EXEC CICS GETMAIN and FREEMAN commands, go to the IBM Knowledge Center at http://publib.boulder.ibm.com/infocenter/cicsts/v3r1/index.jsp .

If you do not explicitly free storage that was allocated through language facilities or Language Environment callable services, the storage is freed at enclave termination.

CICS short-on-storage condition

The CICS short-on-storage condition might be raised under Language Environment if functions in your application attempt to acquire storage by using language facilities and not enough storage is available to satisfy the request. CICS places the transaction on a queue until the storage request can be satisfied. If CICS cannot get

enough storage in a reasonable amount of time to satisfy the request, then the transaction that issued the storage request is terminated by CICS with abend code AKCP.

CICS storage protect facility

The CICS Storage Protect Facility allows you to isolate user applications from CICS storage. For information about the CICS Storage Protect Facility, go to the IBM Knowledge Center at http://publib.boulder.ibm.com/infocenter/cicsts/v3r1/index.jsp.

All storage that Language Environment acquires on behalf of the user, such as working storage, heap, and stack, it acquires in the default key specified on the transaction. All storage that Language Environment acquires for its own use, such as control blocks, it acquires using USERDATAKEY storage. Applications running with Language Environment can obtain CICSDATAKEY storage by using the EXEC CICS interface.

PL/I storage considerations under CICS

Special storage considerations for running PL/I applications under CICS are described in the following topics

Initializing static external data

You must initialize static external data under CICS because CICS cannot handle common CSECTs.

PL/I object program size

The load module resulting from a PL/I application must not occupy more than 524,152 bytes of main storage. An exception is that an RMODE=ANY program can occupy 16 megabytes, although this is not recommended.

Using CICS storage constructs instead of PL/I language statements

In the case when a PL/I routine (routine A, for example) issues an EXEC CICS LINK to another PL/I routine (routine B, for example), you might want to use EXEC CICS GETMAIN and FREEMAIN commands to get and free storage. This is because the scope of EXEC CICS GETMAIN is the scope of the entire task, not just a single routine. Either routine A or routine B can explicitly free the storage. Alternatively, you can choose to not explicitly free the storage in either routine, but allow the storage to be freed automatically when the task is terminated. Another advantage to using EXEC CICS GETMAIN is that if routine A terminates, the storage is still available to routine B.

When you use PL/I language statements to get and free storage, the scope of PL/I storage statements is the routine, not the task. Although routine B can alter the storage allocated by routine A by using a pointer, routine B cannot free the storage. In addition, if routine A terminates, the storage is automatically freed. Routine B can no longer access the storage.

PL/I storage classes

When using CICS, you should avoid altering STATIC storage. Doing so violates reentrancy and can yield unpredictable results. Instead of altering STATIC storage, you should make most or all user variables that are changed while the routine is running AUTOMATIC. Those user variables with initial values that never change should be declared STATIC INITIAL.

Although AUTOMATIC storage provides reentrancy and should suffice for most purposes, you can also allocate and free storage with the ALLOCATE and FREE statements, which you can use to allocate and free BASED and CONTROLLED variables. References you make to BASED storage are handled with the pointer set by the ALLOCATE statement. The pointer itself can be AUTOMATIC.

You can use CONTROLLED storage under CICS, because it is consistent with reentrancy.

Using PUT DATA with BASED storage: BASED storage is used extensively in CICS transactions. You therefore need to be aware of the following restriction on PUT DATA.

In PL/I, you cannot code:

```
PUT DATA (P -> VAR);
```

If, however, VAR was declared as BASED (P), the value of the generation of VAR to which P points can be coded as:

```
PUT DATA (VAR);
```

Using STORAGE built-in functions

The STORAGE and CURRENTSTORAGE built-in functions return the length of an item to your PL/I routine. This is useful in CICS, where functions often require the length of an argument as well as its address. In particular, you can use these functions to get lengths of PL/I aggregates without having to count or compute such lengths or specify length fields in the CICS commands.

For more information about the STORAGE and CURRENTSTORAGE built-in functions, see the IBM Enterprise PL/I for z/OS library (http://www.ibm.com/support/docview.wss?uid=swg27036735) .

Condition handling under CICS

The Language Environment condition handling services described in Chapter 15, “Introduction to Language Environment condition handling,” on page 193 and in other topics are supported under CICS, but additional considerations apply when running an application under CICS; these considerations are described in the following topics

Condition handling in nested enclaves created by EXEC CICS LINK or EXEC CICS XCTL is discussed in “How conditions arising in child enclaves are handled” on page 527.

PL/I considerations for using the CICS HANDLE ABEND command

The EXEC CICS HANDLE facility resembles a PL/I ON-unit with this syntax:

```
ON condition GO TO label;
```

You can code the HANDLE command wherever you would code the ON...GO TO...statement. The label to be branched to can be located in any other active block, and the condition can arise in an even later block. HANDLE terminates intervening PL/I blocks by invoking PL/I's out-of-block GO TO facilities.

Note: Because PL/I internal procedures are not active at all times, you should not use internal procedures as exit routines in HANDLE commands.

HANDLE is not semantically identical to the `ON condition GO TO label;` statement. A PL/I ON-unit disappears when the block containing it terminates; a CICS HANDLE disappears permanently when it is explicitly overridden by another one at the same logical LINK level.

A HANDLE command could specify a branch to a label in a block no longer active. Because HANDLE is implemented by forcing a PL/I out-of-block GO TO, this is equivalent to assigning a label constant to a PL/I label variable after the block containing the label constant has terminated, which is invalid. The PL/I out-of-block GO TO mechanism attempts to detect this error and raises the ERROR condition. If PL/I out-of-block GO TO fails to detect such an invalid GO TO, however, the GO TO becomes a wild branch that causes some unpredictable failure. Thus, upon return from a PL/I block that established HANDLE for a particular condition, your program should issue a resetting HANDLE for that condition (provided, of course, that there is still some possibility of the condition arising). A PL/I ON-unit does not have to be reset.

Effect of the CICS HANDLE ABEND command

When an application is running under CICS with Language Environment, condition handling differs depending on whether a CICS HANDLE ABEND is active or **not** active.

When a CICS HANDLE ABEND is active, Language Environment condition handling does not gain control for any abends or program interrupts. Any abends or program interrupts that occur while a CICS HANDLE ABEND is active cause the action defined in the CICS HANDLE ABEND to take place. The user-written condition handlers established by CEEHDLR are ignored.

When a CICS HANDLE ABEND is not active, Language Environment condition handling does gain control for abends and program interrupts if the TRAP(ON) option is specified. Normal Language Environment condition handling is then performed.

Effect of the CICS HANDLE CONDITION and CICS HANDLE AID

Language Environment condition handling does not alter the behavior of applications that use CICS HANDLE CONDITION or CICS HANDLE AID. The CICS CONDITION and AID conditions are raised by CICS and are handled only by CICS; Language Environment is not involved in the handling of CICS conditions.

Restrictions on user-written condition handlers under CICS

The following EXEC CICS commands cannot be used within a user-written condition handler established using CEEHDLR, or within any routine called by the user-written condition handler:

- EXEC CICS ABEND
- EXEC CICS HANDLE AID
- EXEC CICS HANDLE ABEND
- EXEC CICS HANDLE CONDITION
- EXEC CICS IGNORE CONDITION
- EXEC CICS POP HANDLE
- EXEC CICS PUSH HANDLE

All other EXEC CICS commands are allowed within a user-written condition handler. However, they must be coded using the NOHANDLE option, the RESP option, or the RESP2 option. This prevents additional conditions being raised due to a CICS service failure.

COBOL considerations

A user-written condition handler registered for a routine using the CEEHDLR service cannot be translated using the CICS translator and therefore cannot contain any EXEC CICS commands. This is because the CICS translator inserts (onto the PROCEDURE DIVISION header of the COBOL program) the arguments EXEC Interface Block (EIB) and COMMAREA, which do not match arguments passed by Language Environment.

However, a user-written condition handler can call a subroutine to perform EXEC CICS commands. If arguments need to be passed to this subroutine, they should be preceded by two dummy arguments in the caller. The called subroutine must issue EXEC CICS ADDRESS EIB before executing any other EXEC CICS commands.

CICS transaction abend codes

The same Language Environment reserved abend codes (4000 through 4095) are used for applications running under CICS. In addition, there are special reason codes returned to CICS for severe Language Environment conditions. These severe conditions are CICS-specific. For a detailed explanation of these reason codes, see *z/OS Language Environment Runtime Messages*.

Using the CBLPSHPOP runtime option under CICS

This topic applies to Enterprise COBOL for z/OS, COBOL for OS/390 & VM, COBOL for MVS & VM, COBOL/370, and VS COBOL II programs only.

The CBLPSHPOP runtime option controls whether the Language Environment environment automatically issues an EXEC CICS PUSH HANDLE command during initialization and an EXEC CICS POP HANDLE command during termination whenever a COBOL subroutine is called.

If your application calls COBOL subroutines under CICS, your application performance is better with CBLPSHPOP(OFF) than with CBLPSHPOP(ON). You can set CBLPSHPOP on a transaction-by-transaction basis by using CEEUOPT.

For more information about CBLPSHPOP, see *z/OS Language Environment Programming Reference*.

Restrictions on assembler user exits under CICS

The following EXEC CICS commands cannot be used within the assembler user exit or any routines called by the assembler user exit:

- EXEC CICS ABEND
- EXEC CICS HANDLE AID
- EXEC CICS HANDLE ABEND
- EXEC CICS HANDLE CONDITION
- EXEC CICS PUSH HANDLE
- EXEC CICS POP HANDLE
- EXEC CICS IGNORE CONDITION

All other EXEC CICS commands are allowed within the assembler user exit. However, they must be coded using the NOHANDLE option, the RESP option, or the RESP2 option. This prevents additional conditions being raised due to a CICS service failure.

See Chapter 28, "Using runtime user exits," on page 421 for a discussion of the assembler user exits available under Language Environment.

PL/I considerations

You can use PLIRETC to communicate with the Language Environment assembler user exit. For more information about PLIRETC, see "For PL/I" on page 155. For more information about the assembler user exit, see Chapter 28, "Using runtime user exits," on page 421.

The CICS user exit for PL/I, IBMFXITA, is supported for compatibility by Language Environment. For migration information, see IBM Enterprise PL/I for z/OS library (http://www.ibm.com/support/docview.wss?uid=swg27036735).

Ensuring transaction rollback under CICS

Conditions that occur while an application is executing under CICS can potentially contaminate any database currently being used by the application. It is essential that a rollback (the backing out of any updates made by the failing application) be performed before further damage to the database can occur.

There are two ways to ensure that a transaction rollback occurs when an unhandled condition of severity 2 or greater is detected:

- Use the ABTERMENC(ABEND) runtime option, or
- Make sure the assembler user exit requests an abend for unhandled conditions of severity 2 or greater.

See *z/OS Language Environment Programming Reference* for an explanation of the ABTERMENC runtime option. For more information about using assembler user exits, see Chapter 28, "Using runtime user exits," on page 421.

Runtime output under CICS

Language Environment provides the same message handling and dump services for CICS as it does for non-CICS systems. Any exceptions to this support under CICS are noted in the following topics.

Message handling under CICS

The MSGFILE runtime option is ignored under CICS, because messages for a run unit are directed instead to the CICS transient data queue named CESE.

Messages are prefixed by a terminal ID, a transaction ID, a date, and a timestamp before their transmission. Figure 97 on page 410 illustrates this format.

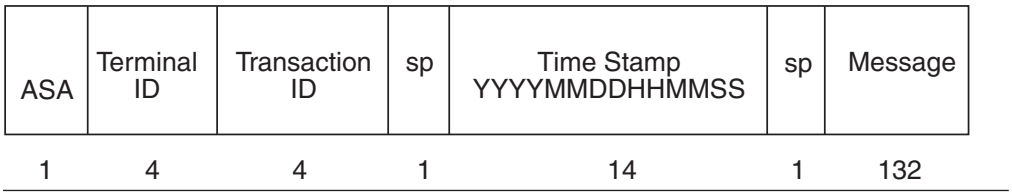

Figure 97. Format of messages sent to CESE

ASA The American National Standard Code for Information Interchange (ASCII) carriage-control character (optional character).

Terminal ID
A 4-character terminal identifier.

Transaction ID
A 4-character transaction identifier.

sp A space.

Timestamp
The date and time displayed in the same format as that returned by the CEELOCT service.

Message
The message identifier and message text.

The entire message record is preceded by an ASCII control character to determine the format of the printing.

Message records are V-format.

See Chapter 19, "Using and handling messages," on page 295 for a complete description of Language Environment message handling.

PL/I SYSPRINT

PL/I SYSPRINT also uses the CESE transient data queue. For information on how to declare SYSPRINT, see the IBM Enterprise PL/I for z/OS library (http://www.ibm.com/support/docview.wss?uid=swg27036735).

CICS XPLINK SYSPRINT

CICS XPLINK applications use SYSPRINT as the destination when writing to the COUT, CEEOUT. or STDOUT data streams.

Dump services under CICS

Under CICS, the FNAME parameter of the CEE3DMP callable service is ignored. Instead of being written to a ddname specified in FNAME, dumps are instead transmitted to the CICS transient data queue named CESE.

The dump is prefixed with the same information shown in Figure 97.

PL/I considerations

The PLIDUMP subroutine has two additional options under CICS and some special considerations. For more information about PLIDUMP, see *z/OS Language Environment Debugging Guide*.

Support for calls within the same HLL under CICS

For ILC information while running under CICS, see *z/OS Language Environment Writing Interlanguage Communication Applications*.

C

EXEC CICS LINK, EXEC CICS XCTL, and calls via fetch() and DLL are supported under CICS. The fetched program or DLL must be defined in the CSD and installed in the PPT. For more information, see *z/OS XL C/C++ Programming Guide*.

C++

EXEC CICS LINK, EXEC CICS XCTL, and dynamic calls via DLL are supported under CICS. The DLL must be defined in the CSD and installed in the PPT. For further information, see *z/OS XL C/C++ Programming Guide*.

COBOL

The following topics describe support for calls compiled under different versions of COBOL compilers.

Language Environment-conforming COBOL

Static and dynamic calls between Enterprise COBOL for z/OS, COBOL for OS/390 & VM, COBOL for MVS & VM, COBOL/370, and VS COBOL II programs are supported as follows:

- Called programs can contain any command or facility supported by CICS for COBOL.
- If the called program has been translated by the CICS translator, calling programs must pass the EIB and COMMAREA as the first two parameters on the CALL statement.

Enterprise COBOL for z/OS, COBOL for OS/390 & VM, COBOL for MVS & VM and COBOL/370 programs can invoke or be invoked by OS/VS COBOL programs only through CICS facilities such as EXEC CICS LINK, EXEC CICS XCTL, and EXEC CICS RETURN.

VS COBOL II

Static and dynamic calls to or from Enterprise COBOL for z/OS, COBOL for OS/390 & VM, COBOL for MVS & VM, COBOL/370, and VS COBOL II programs are supported with the same considerations previously listed.

VS COBOL II programs can communicate with OS/VS COBOL programs only through CICS facilities such as EXEC CICS LINK, EXEC CICS XCTL, and EXEC CICS RETURN.

OS/VS COBOL

OS/VS COBOL programs cannot directly call or be called from Enterprise COBOL for z/OS, COBOL for OS/390 & VM, COBOL for MVS & VM, COBOL/370, or VS COBOL II programs. The only programs that can be called from OS/VS COBOL are other OS/VS COBOL programs, and with the following restrictions:

- The call must be a static CALL
- The subprogram cannot contain EXEC CICS statements.

PL/I

Static calls are supported from any version of PL/I. Called subroutines can invoke CICS services if the address of the EIB is passed to the subroutine properly. You can do this by setting up the address of the EIB yourself and passing it to the subroutine, or by coding the following command in the subroutine before issuing any other CICS commands.

```
EXEC CICS ADDRESS EIB(DFHEIPTR)
```

PL/I FETCH is supported under CICS in a PL/I transaction compiled with Enterprise PL/I for z/OS and PL/I for MVS & VM. CICS does not support PL/I MTF applications.

Chapter 26. Running applications under DB2

This topic describes Language Environment support for DB2 applications.

An application program requests DB2 services by using SQL statements imbedded in the program. The imbedded SQL is translated by the SQL pre-compiler into host language statements that typically perform assignments and then call a DB2 language interface module. The same entry point of the module is called by all Language Environment-conforming languages. DB2 processes the request and then returns to the application.

Language Environment support for DB2 applications

You are not required to modify anything in your code to run a Language Environment-conforming application with DB2. Language Environment also supports ILC applications that use DB2 services.

Language Environment supports XPLINK applications that use DB2 services, but does not support XPLINK-compiled DB2 stored procedures.

Condition handling under DB2

Any errors occurring in DB2 are trapped by DB2 and handled properly. If a task terminates, DB2 takes appropriate action depending on the nature of termination.

The Language Environment runtime user exits can be used by the installation to effect abnormal termination, and therefore database rollbacks, of applications.

For information about additional HLL restrictions under DB2, see the Application Programming Guide for your HLL. For more information about using DB2 services, see *Database 2 Application Programming and SQL Guide*.

PL/I consideration for DB2 applications

PL/I multitasking applications are not supported under DB2. PL/I multitasking applications support DB2 SQL statements from multiple tasks only in non-CICS and non-IMS environments.

© Copyright IBM Corp. 1991, 2015

Chapter 27. Running applications under IMS

This topic describes Language Environment support for applications running under IMS/ESA Version 3 Release 1 and later.

You do not need to change any of the code in your application in order to run under IMS/ESA, but there are a number of restrictions and recommendations that you should consider. Two of these concerns include ensuring proper condition handling under IMS and running your application in an IMS/ESA environment. These topics, together with an overview of how Language Environment interacts with IMS, are discussed in detail.

For a detailed description of how to write IMS batch and online applications, see the IMS Application Programming Guide appropriate to your version of IMS.

Using the interface between Language Environment and IMS

Language Environment provides a callable service, CEETDLI, that you can use to invoke IMS (Version 4 or later) facilities. In assembler, COBOL, PL/I, C and C++, you can also invoke IMS by using the following interfaces:

- In assembler, the ASMTDLI interface
- In COBOL, the CBLTDLI interface
- In PL/I, the PLITDLI interface
- In C or C++, the CTDLI interface (a `ctdli()` function call)
- In C or C++ (including XPLINK-compiled functions), the CTDLI interface (a `ctdli()` function call)

Under Language Environment, each of these interfaces continues to function in its current capacity. CEETDLI performs essentially the same functions, but it offers some advantages, particularly if you plan to run an ILC application in IMS. For example, if you use CEETDLI, you get coordinated condition handling between Language Environment and IMS condition handling facilities. For more information, see "Coordinated condition handling under IMS" on page 417.

CEETDLI supports calls that use an *application interface block* (AIB) or a *program communication block* (PCB).

For more information about AIB and a complete description of all available IMS functions and argument parameters you can specify in CEETDLI, see an IMS Application Programming Guide.

Appendix B, "EXEC DLI and CALL IMS Interfaces," on page 559 lists various DL/I interfaces and the support for them under CICS and IMS. For information about CEETDLI, including its syntax and examples, see *z/OS Language Environment Programming Reference*.

z/OS XL C/C++ considerations under IMS

To interface with IMS from z/OS XL C/C++, you must do the following:

- Specify the PLIST(OS), ENV(IMS), and NOEXECOPS runtime options of `#pragma runopts` in your source code. The PLIST(OS) option establishes the correct parameter list format when invoked under IMS. The ENV(IMS) option

© Copyright IBM Corp. 1991, 2015

establishes the correct operating environment. The NOEXECOPS option specifies that runtime options cannot be specified for IMS.
- When you use the PLIST(OS) option in `#pragma runopts`, `argc` contains 1 (one) and `argv`[0] contains NULL.

For more information about using the `#pragma runopts` preprocessor directive, see Chapter 9, "Using runtime options," on page 119.

Applications that use the POSIX(ON) runtime option are supported under IMS only if they consist of a single thread. Calls to z/OS UNIX threading functions are restricted under IMS. See *z/OS XL C/C++ Programming Guide* for a list of restrictions on running z/OS XL C/C++ programs under IMS with z/OS UNIX.

The IMS environment supports 31-bit XPLINK applications . However, applications that make many calls to the Language Environment callable service CEETDLI or the C ctdli() function might not be suitable for XPLINK because of the overhead for these XPLINK to nonXPLINK calls. See "When XPLINK should not be used" on page 36 for more information.

C++ considerations under IMS

To interface with IMS from C++, you must do the following:
- For any C++ program that runs under IMS, you must specify the TARGET(IMS) compiler option.
- For any C++ program that is the initial `main()` called under IMS, you must specify the PLIST(OS) compiler option.
- For any C++ programs in nested enclaves, you need only specify the TARGET(IMS) compiler option.

PL/I considerations under IMS

With IMS/ESA Version 4, PL/I supports PSBs with LANG=PLI and all others (including LANG=blank), except LANG=Pascal. With IMS/ESA Version 3 Release 1, PL/I supports PSBs with LANG=PLI only.

The SYSTEM(IMS) compiler option must be specified for PL/I applications running under IMS. When SYSTEM(IMS) is specified, the OPTIONS(BYVALUE) attribute is implied for any external PROCEDURE that also has OPTIONS(MAIN). Further, the parameters to such a MAIN procedure must be POINTERs.

With IMS/ESA Version 3 Release 1 and Version 4, the parameters passed to language-IMS CALL interfaces such as PLITDLI are no longer required to be below the 16M line.

If an assembler program is driving a transaction program written in Enterprise PL/I for z/OS or PL/I for MVS & VM, the main procedure of the transaction must be compiled with SYSTEM(MVS) option; the main procedure receives the parameter list passed from the assembler program in MVS style. IMS does not support PL/I MTF applications.

IMS communication with your application

When you run your application under IMS, IMS loads the application and passes it the invocation parameter list. A PSB is automatically scheduled for every application you run under IMS. IMS/ESA Version 4 always constructs the parameter list in the same format, regardless of the setting of the LANG= option in the PSB. The LANG= option has no effect on the format of the parameter list that IMS constructs. Thus, any PSB can be used with any HLL application in Language Environment.

Beginning with IMS/ESA Version 4, the LANG= option in the PSB statement is not required.

Before your application is loaded, it is link-edited with an IMS language interface module, DFSLI000. Any calls that your application makes with CEETDLI for IMS services end up in this module. DFSLI000, in turn, invokes the services and returns IMS replies to your application.

Link-edit considerations under IMS

Unless your application communicates with IMS exclusively via dynamic calls to the CEETDLI callable service, DFSLI000 must be link-edited with your application code. Therefore, under MVS, ensure that DFSLI000 appears in a partitioned data set that is specified in the SYSLIB DD statement in the JCL used to link-edit the application.

You must be using IMS Version 4 or later if you want to use the CEETDLI callable service. Errors occur if you attempt to use the CEETDLI callable service and you are not running IMS Version 4.

Making your IMS application reentrant

For many IMS users, the storage required at run time for any given IMS transaction can be fairly large. Therefore, the most efficient method of coding an application is to make it reentrant. This method can eliminate application loading time, speed up IMS initialization and restart, and provide the additional integrity that results from having your routines in protected storage.

Methods for making your application reentrant differ across HLLs. For more information, see Chapter 11, “Making your application reentrant,” on page 141.

Condition handling under IMS

The IMS environment is sensitive to errors or conditions. A failing IMS transaction or application can potentially contaminate an IMS database. For this reason, IMS must know about the failure of a transaction or application that has been updating a database so that it can perform database rollback (the backing out of any updates made by the failing application).

Coordinated condition handling under IMS

Language Environment and IMS condition handling is coordinated, meaning that if a program interrupt or abend occurs when your application is running in an IMS environment, the Language Environment condition manager can determine whether the problem occurred in your application or in IMS. If the program interrupt or abend occurs in IMS, Language Environment, as well as any invoked HLL-specific condition handler, percolates the condition back to IMS.

If a program interrupt or abend occurs in the application outside of IMS, or if a software condition of severity 2 or greater is raised outside of IMS, the Language Environment condition manager takes normal condition handling actions as described in Chapter 15, "Introduction to Language Environment condition handling," on page 193. If the condition manager remains in control, however, you must do one of the following:

- Resolve the error so that the application can continue.
- Issue a rollback call to IMS, and then terminate the application.
- Ensure that the application terminates abnormally by using the ABTERMENC(ABEND) runtime option to transform all abnormal terminations into operating system abends in order to cause IMS rollbacks.
- Ensure that the application terminates abnormally by coding and providing a modified runtime assembler user exit (CEEBXITA) that transforms all abnormal terminations into operating system abends in order to cause IMS rollbacks.

  The assembler user exit you provide should check the return code and reason code or the CEEAUE_ABTERM bit, and request an abend by setting the CEEAUE_ABND flag to ON, if appropriate. See "CEEBXITA assembler user exit interface" on page 427 for more details about the CEEBXITA user exit.

Diagnosing abends with the IMS dump

If an interrupt or abend occurs in IMS, you can use the IMS dump (which contains the information that is available at the time of the program interrupt or abend) for diagnosis. You can also use the Language Environment dump (CEEDUMP) for diagnosis.

If the interrupt or abend occurs in your application (outside of IMS), the IMS dump shows the state of the system after Language Environment gained control, did some cleanup of the environment, and requested the abend. In this case, you can use only the Language Environment dump (CEEDUMP) for diagnosis.

Part 5. Specialized programming tasks

This section describes advanced or specialized tasks that you can perform in Language Environment.

© Copyright IBM Corp. 1991, 2015

Chapter 28. Using runtime user exits

Language Environment provides user exits that you can use for functions at your installation. You can use the assembler user exit (CEEBXITA) or the HLL user exit (CEEBINT). This Using nested enclaves provides information about using these runtime user exits.

User exits are invoked under Language Environment to perform enclave initialization functions and both normal and abnormal termination functions. User exits offer you a chance to perform certain functions at a point where you would not otherwise have a chance to do so. In an assembler initialization user exit, for example, you can specify a list of runtime options that establish characteristics of the environment. This is done before the actual execution of any of your application code.

In most cases, you do not need to modify any user exit in order to run your application. Instead, you can accept the IBM-supplied default versions of the exits, or the defaults as defined by your installation. To do so, run your application in the normal manner and the default versions of the exits are invoked. You might also want to read "User exits supported under Language Environment" and "When user exits are invoked" on page 424, which provide an overview of the user exits and describe when they are invoked.

If you plan to modify either of the user exits to perform some specific function, you must link the modified exit to your application before running. In addition, "Using the assembler user exit CEEBXITA" on page 422 and "CEEBINT high-level language user exit interface" on page 435 describe the respective user exit interfaces to which you must adhere in order to change an assembler or HLL user exit.

User exits supported under Language Environment

Language Environment provides two user exit routines, one written in assembler (CEEBXITA), and the other in a Language Environment-conforming language or Fortran (CEEBINT). You can find sample jobs containing these user exits in the SCEESAMP sample library.

The user exits supported by Language Environment are shown in Table 58.

Table 58. User exits supported under Language Environment

Name	Type of user exit	When invoked
CEEBXITA	Assembler user exit	Enclave initialization Enclave termination Process termination
CEEBINT	HLL user exit. CEEBINT can be written in C, C++ (with C linkage), Fortran, PL/I or Language Environment-conforming assembler.	Enclave initialization

When CEEBXITA or CEEBINT is linked with the Language Environment initialization/termination library routines during installation, it functions as an installation-wide user exit. The sample CEEWCXIT or CEEWDXIT in CEE.SCEESAMP can be used to create and bind(link) your exit with Language

© Copyright IBM Corp. 1991, 2015

Environment initialization/termination routines. When CEEBXITA is linked in your load module, it functions as an application-specific user exit. The application-specific exit is used only when you run that application. The installation-wide assembler user exit is not executed. CEEWUXIT in CEE.SCEESAMP can be used to assist with creating an application-specific user exit.

When your version of CEEBINT is linked with the Language Environment library routines during installation, this version is automatically used at link-edit time for newly built or relinked applications. A new version of CEEBINT will require you to relink your application.

To use an application-specific user exit, you must explicitly include it at link-edit time in the application load module using an MVS INCLUDE link-edit control statement (see "Using the INCLUDE statement" on page 76 for more information). Any time that the application-specific exit is modified, it must be relinked with the application.

The assembler user exit interface is described in "CEEBXITA assembler user exit interface" on page 427. The HLL user exit interface is described in "CEEBINT high-level language user exit interface" on page 435.

Using the assembler user exit CEEBXITA

CEEBXITA tailors the characteristics of the enclave before its establishment. It must be written in assembler language because an HLL environment is not yet established when the exit is invoked. You cannot code CEEBXITA as an XPLINK application. However, since CEEBXITA is called directly by Language Environment and not by the application, a non-XPLINK CEEBXITA can be statically bound in the same program object with an XPLINK application. CEEBXITA is driven for enclave initialization and enclave termination regardless of whether the enclave is the first enclave in the process or a nested enclave. CEEBXITA can differentiate easily between first and nested enclaves. For more information about nested enclaves, see Chapter 31, "Using nested enclaves," on page 525.

CEEBXITA is invoked very early during the initialization process, before enclave initialization is complete. The enclave initialization code recognizes runtime options contained in CEEBXITA.

The assembler user exit is supported with POSIX(ON) and in a threaded environment. Within a given Language Environment process, the following functions are driven on the initial thread:
- Initialization of the first enclave within a process
- Termination of the first enclave within a process
- Termination of the process

For nested enclaves, the following functions are driven:
- Nested enclave initialization
- Nested enclave termination

The abend percolation list is applied to all threads in the enclave as specified in the assembler user exit.

Using the HLL initialization exit CEEBINT

CEEBINT is invoked just before the invocation of the application code. Under Language Environment, this exit can be written in C, C++, Fortran, PL/I, or in

Language Environment-conforming assembler. When CEEBINT is written in C++, it must be declared as `extern "C"` in the C++ source. CEEBINT *cannot* be written in COBOL, even though COBOL applications can use this HLL user exit. You cannot code CEEBINT as an XPLINK application. However, since CEEBINT is called directly by Language Environment and not the application, a non-XPLINK CEEBINT can be statically bound in the same program object with an XPLINK application. When CEEBINT is invoked, the runtime environment is fully operational and all Language Environment-conforming HLLs are supported.

PL/I and C compatibility

The following OS PL/I Version 2 Release 3 user exits are supported for compatibility under Language Environment:

- IBMBXITA (z/OS batch version)
- IBMFXITA (CICS version)

Note: Enterprise PL/I for z/OS does not support the IBMBXITA, IBMFXITA and IBMBINT user exits.

For information about IBMBXITA and IBMBINT, see the appropriate migration guide in IBM Enterprise PL/I for z/OS library (http://www.ibm.com/support/docview.wss?uid=swg27036735) or refer to *z/OS XL C/C++ Programming Guide*.

Default versions of these user exits are not supplied under Language Environment. Instead, Language Environment supplies a default version of CEEBXITA.

Table 59 describes the order of precedence if the IBMBXITA and IBMFXITA user exits are found in the same root load module with CEEBXITA.

Table 59. Interaction of assembler user exits

CEEBXITA present	IBMBXITA present under z/OS batch, IBMFXITA present under CICS	Exit driven
No	No	Default version of CEEBXITA
Yes	No	CEEBXITA
No	Yes	IBMBXITA under z/OS batch; IBMFXITA under CICS
Yes	Yes	CEEBXITA

Using sample assembler user exits

You can use the sample assembler user exit programs distributed with Language Environment to modify the code for the requirements of your application. Choose a sample program appropriate for your application. The following assembler user exit programs are delivered with Language Environment:

Table 60. Sample assembler user exits for Language Environment

Example user exit	Operating system	Where found	Language (if language-specific)
CEEBXITA	MVS (default)	SCEESAMP	
CEEBXITC	TSO	SCEESAMP	
CEECXITA	CICS (default)	SCEESAMP	

Table 60. Sample assembler user exits for Language Environment (continued)

Example user exit	Operating system	Where found	Language (if language-specific)
CEEBX05A	MVS	SCEESAMP	VS COBOL II compatibility

If you install Language Environment at your site without modifying it, your system defaults are CEEBXITA and CEECXITA for MVS and CICS. You can find the source code for CEEBXITA, CEEBXITC, CEECXITA, and CEEBX05A on MVS in the sample library SCEESAMP.

The assembler user exit CEEBXITA performs functions for enclave initialization, normal and abnormal enclave termination, and process termination. CEEBXITA must be written in assembler language, because an HLL environment might not be established when the exit is invoked.

You can set up user exits for tasks such as:
- Installation accounting and charge back
- Installation audit controls
- Programming standard enforcement
- Common application runtime support

When user exits are invoked

Figure 98 on page 425 shows the timing of the invocations of the user exits at initialization and termination processing.

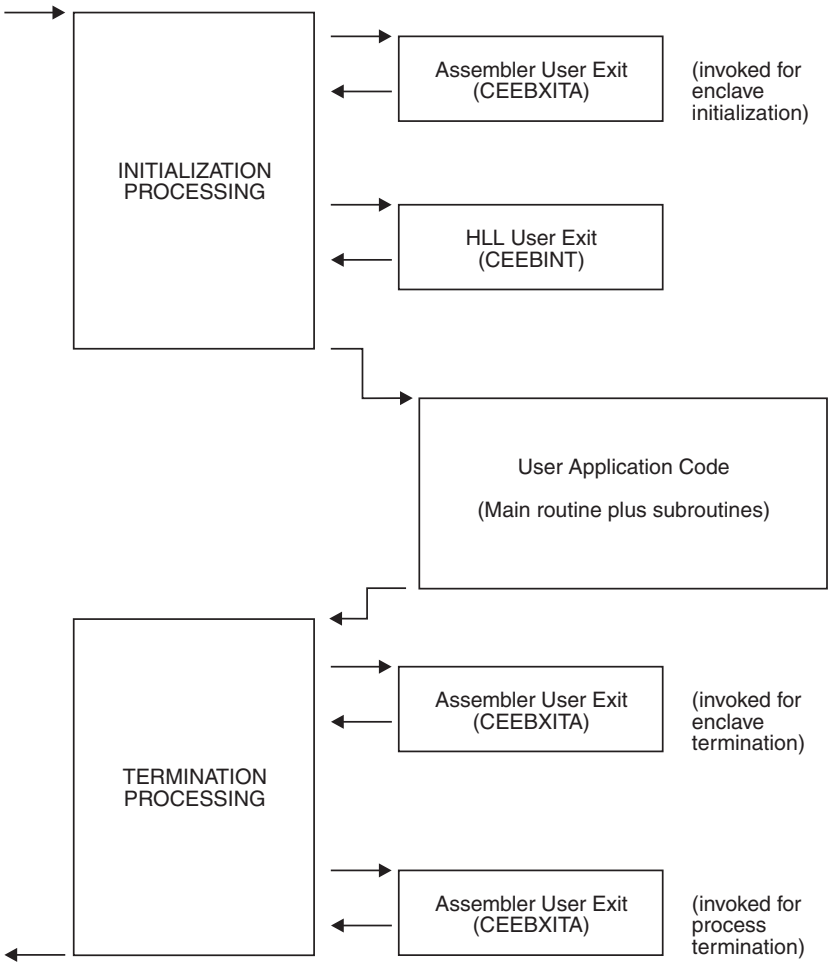

Figure 98. Location of user exits

In Figure 98, runtime user exits are invoked in the following sequence:

1. Assembler user exit is invoked for enclave initialization.
2. Environment is established.
3. HLL user exit is invoked.
4. Main routine is invoked.
5. Main routine returns control to caller.
6. Assembler user exit is invoked for termination of the enclave. CEEBXITA is invoked for enclave termination processing after all application code in the enclave has completed, but before any enclave termination activity.
7. Environment is terminated.
8. Assembler user exit is invoked for termination of the process. CEEBXITA is invoked again when the Language Environment process terminates.

Language Environment provides the CEEBXITA assembler user exit for termination but does not provide a corresponding HLL termination user exit.

CEEBXITA behaves differently, depending upon when it is invoked, as described in the following topics.

CEEBXITA behavior during enclave initialization

The CEEBXITA assembler user exit is invoked before enclave initialization is performed. You can use CEEBXITA to help establish your application runtime environment. For example, in the assembler user exit you can specify the stack and heap runtime options and allocate data sets. You can also use the user exit to interrogate program parameters supplied in the JCL and change them if you want. In addition, you can specify runtime options in the user exit by using the CEEAUE_A_OPTIONS field of the assembler interface.

CEEBXITA returns control to Language Environment initialization.

CEEBXITA behavior during enclave termination

The CEEBXITA assembler exit is invoked after the user code for the enclave has completed, but before the occurrence of any enclave termination activity. In other words, the assembler user exit for termination is invoked when the environment is still active. For example, CEEBXITA is invoked before the storage report is produced (if you requested one), data sets are closed, and CODE is invoked for enclave termination.

The assembler user exit permits you to request an abend. You can also request a dump to assist in problem diagnosis. Because termination activities have not yet begun when the user exit is invoked, the majority of storage has not been modified when the dump is produced.

You can request the abend and dump in the assembler user exit for all enclave-terminating events including:

- The situation that occurs in PL/I when the ON condition (including ERROR or FINISH) is raised and one of the following conditions is true:
  - The program does not have an appropriate ON-unit.
  - The ON-unit does not terminate with a GOTO.
  - The GOTO is not allowed.

  This rule applies only to the conditions that cause termination of the program.
- Return from the main routine
- A Debug Tool QUIT command
- An HLL stop statement such as:
  - C `exit()`
  - COBOL STOP RUN
  - PL/I STOP or EXIT
  - Fortran STOP
- An unhandled condition of severity 2 or above

If a dump is requested in the user assembler exit and an unhandled condition has occurred, this dump will overwrite the dump taken by TERMTHDACT(UADUMP).

CEEBXITA behavior during process termination

The CEEBXITA assembler exit is invoked after:

- All enclaves have terminated
- The enclave resources have been relinquished
- Any Language Environment-managed files have been closed
- Debug Tool has terminated

At this time you can free allocated files and request an abend.

During termination, CEEBXITA can interrogate the Language Environment reason and return codes and, if necessary, request an abend with or without a dump. This can be done at either enclave or process termination.

Specifying abend codes to be percolated by Language Environment

The assembler user exit, when invoked for initialization, might return a list of abend codes (contained in the CEEAUE_A_AB_CODES field of the assembler user exit interface—see "CEEBXITA assembler user exit interface") that are to be percolated by Language Environment.

On non-CICS systems, this list is contained in the CEEAUE_A_AB_CODES field of the assembler user exit interface. (See "CEEBXITA assembler user exit interface.") Both system abends and user abends can be specified in this list. The abend percolation list specified in the assembler user exit applies to all threads in the enclave.

When TRAP(ON) is in effect, and the abend code is in the CEEAUE_A_AB_CODES list, Language Environment percolates the abend. Normal Language Environment condition handling is never invoked to handle these abends. This feature is useful when you do not want Language Environment condition handling to intervene for certain abends, such as when IMS issues a user ABEND code 777.

When TRAP(OFF) is specified and there is a program interrupt, the user exit for termination is not driven.

Actions taken for errors that occur within the exit

If any errors occur during the enclave initialization user exit, the standard system action occurs because Language Environment condition handling has not yet been established.

Any errors occurring during the enclave termination user exit lead to abnormal termination (through an abend) of the Language Environment environment.

If there is a program check during the enclave termination user exit and TRAP(ON) is in effect, the application ends abnormally with ABEND code 4044 and reason code 2. If there is a program check during the enclave termination user exit and TRAP(OFF) has been specified, the application ends abnormally without additional error checking support. Language Environment performs no condition handling; error handling is performed by the operating system.

Language Environment takes the same actions as described above for program checks during the process termination user exit.

CEEBXITA assembler user exit interface

You can modify CEEBXITA to perform any function you need, but the exit must have the following attributes after you modify it at installation:

- The user-supplied exit must be named CEEBXITA.
- The exit must be reentrant.
- The exit must be capable of executing in AMODE(ANY) and RMODE(ANY).

Guidelines for using CEEBXITA

Installation-wide:

- You must bind (link) the exit with the appropriate Language Environment initialization/termination routines after modification.
- Use the sample customization jobs CEEWDXIT and CEEWCXIT to assist with creating and binding (linking) your exit with Language Environment initialization/termination routines.
- See the section on changing the assembler language user exit in *z/OS Language Environment Customization* for more details.

Application-specific:

- You must bind (link) the exit with your application.
- Use the sample job CEEWUXIT to assist with creating your exit.
- See the section on changing the assembler language user exits in *z/OS Language Environment Customization* for more details.

If a user exit is modified, you are responsible for conforming to the interface shown in Figure 99. This user exit must be written in assembler. You cannot code CEEBXITA as an XPLINK application. However, since CEEBXITA is called directly by Language Environment and not the application, a non-XPLINK CEEBXITA can be statically bound in the same program object with an XPLINK application.

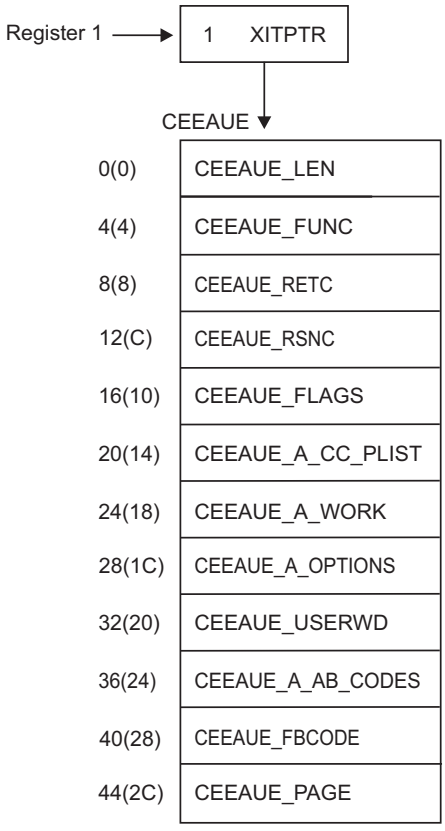

Figure 99. Interface for the CEEBXITA assembler user exit

When the user exit is called, register 1 points to a word that contains the address of the CEEAUE control block. The high-order bit is on.

The CEEAUE control block contains the following fullwords:

CEEAUE_LEN (input parameter)
A fullword integer that specifies the total length of this control block. For Language Environment, the length is 48 bytes.

CEEAUE_FUNC (input parameter)
A fullword integer that specifies the function code. Language Environment supports the following function codes:

1 Initialization of the first enclave within a process.
2 Termination of the first enclave within a process.
3 Nested enclave initialization.
4 Nested enclave termination.
5 Process termination.

The user exit should ignore function codes other than those numbered from 1 through 5.

CEEAUE_RETC (input/output parameter)
A fullword integer that specifies the return or abend code. CEEAUE_RETC has different meanings, depending on CEEAUE_ABND:

- If the flag CEEAUE_ABND (see below) is off, this fullword is interpreted as the Language Environment return code placed in register 15.
- If the flag CEEAUE_ABND is on, CEEAUE_RETC is interpreted as an abend code used when an abend is issued. (This could be either an EXEC CICS ABEND or an SVC13.)

CEEAUE_RSNC (input/output parameter)
A fullword integer that specifies the reason code for CEEAUE_RETC:

- If the flag CEEAUE_ABND (see below) is off, this word is interpreted as the Language Environment reason code placed in register 0.
- If the flag CEEAUE_ABND is on, CEEAUE_RETC is interpreted as an abend reason code used when an abend is issued.

This field is ignored when an EXEC CICS ABEND is issued.

CEEAUE_FLAGS
Contains four 1-byte flags. CEEBXITA uses only the first byte but reserves the remaining flags. All unspecified bits and bytes must be 0. The layout of these flags is shown in Figure 100 on page 430:

```
Byte 0
         x... .... CEEAUE_ABTERM
         0... .... Normal termination
         1... .... Abnormal termination
         .x.. .... CEEAUE_ABND
         .0.. .... Terminate with CEEAUE_RETC
         .1.. .... ABEND with CEEAUE_RETC and CEEAUE_RSNC given
         ..x. .... CEEAUE_DUMP
         ..0. .... If CEEAUE_ABND=0, ABEND with no dump
         ..1. .... If CEEAUE_ABND=1, ABEND with a dump
         ...x .... CEEAUE_STEPS
         ...0 .... ABEND the task
         ...1 .... ABEND the step
         .... 0000 Reserved (must be zero)
Byte 1
         0000 0000 Reserved for future use
Byte 2
         0000 0000 Reserved for future use
Byte 3
         0000 0000 Reserved for future use
```

Figure 100. CEEAUE_FLAGS format

Byte 0 (CEEAUE_FLAG1) has the following meaning:

CEEAUE_ABTERM (input parameter)

OFF Indicates that the enclave is terminating normally (severity 0 or 1 condition).

ON Indicates that the enclave is terminating with an Language Environment return code modifier of 2 or greater. This could, for example, indicate that a severity 2 or greater condition was raised but not handled.

CEEAUE_ABND (input/output parameter)

OFF Indicates that the enclave should terminate without an abend being issued. Thus, CEEAUE_RETC and CEEAUE_RSNC are placed into register 15 and register 0 and returned to the enclave creator.

ON Indicates that the enclave terminates with an abend. Thus, CEEAUE_RETC and CEEAUE_RSNC are used by Language Environment in the invocation of the abend. During running in CICS, an EXEC CICS ABEND command is issued.

The TRAP runtime option does not affect the setting of CEEAUE_ABND.

When the ABTERMENC(ABEND) runtime option is specified, the enclave always terminates with an abend when there is an unhandled condition of severity 2 or greater, regardless of the setting of the CEEAUE_ABND flag. See "Termination behavior for unhandled conditions" on page 156 for a detailed explanation of how the CEEAUE_ABND parameter can affect the behavior of the ABTERMENC runtime option.

CEEAUE_DUMP (output parameter)

OFF Indicates that when you request an abend, an abend is issued without requesting a dump.

ON Indicates that when you request an abend, an abend requesting a dump is issued.

CEEAUE_STEPS (output parameter)

OFF Indicates that when you request an abend, an abend is issued to abend the entire TASK.

ON Indicates that when you request an abend, an abend is issued to abend the STEP.

This parameter is ignored under CICS.

CEEAUE_A_CC_PLIST (input/output parameter)
A fullword pointer to the parameter address list of the application program.

If the parameter is not a character string, CEEAUE_A_CC_PLIST contains the register 1 value as passed by the calling program or operating system at the time of program entry.

If the parameter inbound to the MAIN routine is a character string, CEEAUE_A_CC_PLIST contains the address of a fullword address that points to a halfword prefixed string. If this string is altered by the user exit, the string must not be extended in place.

CEEAUE_A_WORK (input parameter)
A fullword pointer to a 256-byte work area that the exit can use. On entry it contains binary zeros and is doubleword-aligned.

This area does not persist across exits.

CEEAUE_A_OPTIONS (output parameter)
Upon return, this field contains a fullword pointer to the address of a halfword-length prefixed character string that contains runtime options. These options are honored only during the initialization of an enclave. When invoked for enclave termination, this field is ignored.

These runtime options override all other sources of runtime options except those that are specified as NONOVR.

Under CICS, the STACK runtime option cannot be modified with the assembler user exit.

CEEAUE_USERWD (input/output parameter)
A fullword whose value is maintained without alteration and passed to every user exit. Upon entry to the enclave initialization user exit, it is zero. Thereafter, the value of the user word is not altered by Language Environment or any member libraries. The user exit might change the value of this field, and Language Environment maintains that value. This allows the user exit to acquire a work area, initialize it, and pass it to subsequent user exits. The work area might be freed by the termination user exit.

CEEAUE_A_AB_CODES (output parameter)
During the initialization exit, this field contains a fullword address of a table of abend codes that the Language Environment condition handler percolates while in the (E)STAE exit. Therefore, the application does not have the chance to address the abend. This table is honored before shunt routines. The table consists of:

- A fullword count of the number of abend codes that are to be percolated
- A fullword for each of the particular abend codes that are to be percolated

The abend codes might be either user abend codes or system abend codes. User abend codes are specified by F'uuu'. For example, if you want to percolate user ABEND 777, a F'777' would be coded. System abend codes are specified by X'00sss000'.

This parameter is not enabled under CICS.

CEEAUE_FBCODE (input parameter)
Contains a fullword address of the condition token with which the enclave terminated. If the enclave terminates normally (that is, not due to a condition), the condition token is zero.

CEEAUE_PAGE (input parameter)
This parameter indicates whether PL/I BASED variables that are allocated storage outside of AREAs are allocated on a 4K-page boundary. You can specify in the field the minimum number of bytes of storage that must be allocated. Your allocation request must be an exact multiple of 4 KB.

The IBM-supplied default setting for CEEAUE_PAGE is 32768 (32 KB).

If CEEAUE_PAGE is set to zero, PL/I BASED variables can be placed on other than 4K-page boundaries.

CEEAUE_PAGE is honored only during enclave initialization, that is, when CEEAUE_FUNC is 1 or 3.

The offset of CEEAUE_PAGE under Language Environment is different than under OS PL/I Version 2 Release 3.

Parameter values in the assembler user exit

The parameters described in "CEEBXITA assembler user exit interface" on page 427 contain different values depending on how the user exit is used. Table 61 and Table 62 on page 434 describe the possible values for the parameters based on how the assembler user exit is invoked.

Table 61. Parameter values in the assembler user exit (Part 1). The assembler user exit contains these parameter values depending on when it is invoked.

When invoked	CEEAUE_ LEN	CEEAUE_RETC	CEEAUE_RSNC	CEEAUE_ FLAGS	CEEAUE_A_CC_ PLIST
First enclave within process initialization: Entry CEEAUE_FUNC = 1	48	0	0	0	Upon entry, CEEAUE_A_CC_ PLIST contains the register 1 value from the operating system. It contains the user parameters. You can alter it in a user exit. Upon return, the CEEAUE_A_CC_ PLIST is processed and merged as the invocation string.
First enclave within process initialization: Return		0, or abend code if CEEAUE_ABND = 1	0, or reason code for CEEAUE_RETC if CEEAUE_ABND = 1	See Note 1 on page 434.	Register 1, used as the new parameter list. CEEAUE_A_CC_ PLIST contains the user parameters. You can alter it in a user exit. Upon return, the CEEAUE_A_CC_ PLIST is processed and merged as the invocation string.

Table 61. Parameter values in the assembler user exit (Part 1) (continued). The assembler user exit contains these parameter values depending on when it is invoked.

When invoked	CEEAUE_ LEN	CEEAUE_RETC	CEEAUE_RSNC	CEEAUE_ FLAGS	CEEAUE_A_CC_ PLIST
First enclave within process termination: Entry CEEAUE_FUNC = 2	48	Return code issued by application that is terminating.	Reason code that accompanies CEEAUE_RETC.	See Note 2 on page 434.	
First enclave within process termination: Return		If CEEAUE_ABND = 0, the return code placed into register 15 when the enclave terminates. If CEEAUE_ABND = 1, the abend code.	If CEEAUE_ABND = 0, the enclave reason code. If CEEAUE_ABND = 1, the abend reason code.	See Note 1 on page 434.	
Nested enclave initialization: Entry CEEAUE_FUNC = 3	48	0	0	0	The register 1 value discovered in a nested enclave creation. CEEAUE_A_CC_ PLIST contains the user parameters. You can alter it in a user exit. Upon return, the CEEAUE_A_CC_ PLIST is processed and merged as the invocation string.
Nested enclave initialization: Return		0, or if CEEAUE_ABND = 1, the abend code.	0, or if CEEAUE_ABND = 1, reason code for CEEAUE_RETC.	See Note 1 on page 434.	Register 1 used as the new enclave parameter list. CEEAUE_A_CC_ PLIST contains the user parameters. You can alter it in a user exit. Upon return, the CEEAUE_A_CC_ PLIST is processed and merged as the invocation string.
Nested enclave termination: Entry CEEAUE_FUNC = 4	48	Return code issued by enclave that is terminating.	Reason code accompanying CEEAUE_RETC.	See Note 2 on page 434.	
Nested enclave termination: Return		If CEEAUE_ABND = 0, the return code from the enclave. If CEEAUE_ABND = 1, the abend code.	If CEEAUE_ABND = 0, the enclave reason code. If CEEAUE_ABND = 1, the enclave reason code.	See Note 1 on page 434.	

Table 61. Parameter values in the assembler user exit (Part 1) (continued). The assembler user exit contains these parameter values depending on when it is invoked.

When invoked	CEEAUE_ LEN	CEEAUE_RETC	CEEAUE_RSNC	CEEAUE_ FLAGS	CEEAUE_A_CC_ PLIST
Process termination: Entry Function code = 5	48	Return code presented to the invoking system in register 15 that reflects the value returned from the "first enclave within process termination".	Reason code accompanying CEEAUE_RETC that is presented to the invoking system in register 0 and reflects the value returned from the "first enclave within process termination".	See Note 3.	
Process termination: Return		If CEEAUE_ABND = 0, return code from the process. If CEEAUE_ABND = 1, the abend code.	If CEEAUE_ABND = 0, the reason code for CEEAUE_RETC from the process. If CEEAUE_ABND = 1, reason code for the CEEAUE_RETC abend reason code.	See Note 1.	

Note:

1. **CEEAUE_FLAGS:**
   CEEAUE_ABND = 1 if an abend is requested, or 0 if the enclave should continue with termination processing
   CEEAUE_DUMP = 1 if the abend should request a dump
   CEEAUE_STEPS = 1 if the abend should abend the step
   CEEAUE_STEPS = 0 if the abend should abend the task
2. **CEEAUE_FLAGS:**
   CEEAUE_ABTERM = 1 if the application is terminating with an Language Environment return code modifier of 2 or greater, or 0 otherwise
   CEEAUE_ABND = 1 if an abend is requested, or 0 if the enclave should continue with termination processing
   CEEAUE_DUMP = 0
   CEEAUE_STEPS = 0
3. **CEEAUE_FLAGS:**
   CEEAUE_ABTERM = 1 if the last enclave is terminating abnormally (that is, a Language Environment return code modifier is 2 or greater). This reflects the value returned from the "first enclave within process termination".
   CEEAUE_ABND = 1 if an abend is requested, or 0 if the enclave should continue with termination processing "first enclave within process termination" (function code 2).
   CEEAUE_DUMP = 0
   CEEAUE_STEPS = 0

Table 62. Parameter values in the assembler user exit (Part 2). The assembler user exit contains these parameter values depending on when it is invoked.

When invoked	CEEAUE_A_WORK	CEEAUE_ A_OPTIONS	CEEAUE_ USERWD	CEEAUE_ A_AB_ CODES	CEEAUE_ FBCODE	CEEAUE_PAGE
First enclave within process initialization: Entry CEEAUE_FUNC = 1	Address of a 256-byte work area of binary zeros.		0		0	Minimum number of storage bytes to be allocated for PL/I BASED variables (default = 32768).

Table 62. Parameter values in the assembler user exit (Part 2) (continued). The assembler user exit contains these parameter values depending on when it is invoked.

When invoked	CEEAUE_A_WORK	CEEAUE_ A_OPTIONS	CEEAUE_ USERWD	CEEAUE_ A_AB_ CODES	CEEAUE_ FBCODE	CEEAUE_PAGE
First enclave within process initialization: Return		Pointer to address of a halfword prefixed character string containing runtime options, or 0.	The value of CEEAUE_ USERWD for all subsequent exits.	Pointer to the abend codes table, or 0.		User specified PAGE value. Minimum number of storage bytes to be allocated for PL/I BASED variables (default = 32768).
First enclave within process termination: Entry CEEAUE_FUNC = 2	Address of a 256-byte area of binary zeros.		Return value from previous exit.		Feedback code causing termination.	
First enclave within process termination: Return			The value of CEEAUE_ USERWD for all subsequent exits.			
Nested enclave initialization: Entry CEEAUE_FUNC = 3	Address of a 256-byte work area of binary zeros.		Return value from previous exit.		0	Minimum number of storage bytes to be allocated for PL/I BASED variables (default = 32768).
Nested enclave initialization: Return		Pointer to fullword address that points to a halfword prefixed length string containing runtime options, or 0.	The value of CEEAUE_ USERWD for all subsequent exits.	Pointer to abend codes table, or 0.		User specified PAGE value. Minimum number of storage bytes to be allocated for PL/I BASED variables (default = 32768).
Nested enclave termination: — Entry CEEAUE_FUNC = 4	Address of a 256-byte work area of binary zeros.		Return value from previous exit.		Feedback code causing termination.	
Nested enclave termination: Return			The value of CEEAUE_ USERWD for all subsequent exits.			
Process termination: Entry CEEAUE_FUNC = 5	Address of a 256-byte work area of binary zeros.		Return value from previous exit.		Feedback code causing termination.	
Process termination: Return			The value of CEEAUE_ USERWD for all subsequent exits.			

CEEBINT high-level language user exit interface

Language Environment provides CEEBINT for enclave initialization. You can code CEEBINT in non-XPLINK C and C++, Fortran, PL/I, or Language Environment-conforming assembler. You cannot code CEEBINT as an XPLINK application. CEEBINT is not invoked for an XPLINK application. COBOL programs can use CEEBINT, but CEEBINT cannot be written in COBOL or be used to call COBOL programs.

CEEBINT is supported with POSIX(ON) and in a threaded environment. It is driven only on the initial thread.

You can modify CEEBINT to perform any function desired, although the exit must have the following attributes after you modify it:

- The user exit must not be a main-designated routine. That is, it must not be a C or C++ main function, and OPTIONS(MAIN) must not be specified for PL/I applications.
- CEEBINT must be linked with compiled code. If you do not provide an initialization user exit, an IBM-supplied default, which simply returns control to your application, is linked with the compiled code. When written in C++, CEEBINT must be linked with your application and it can only function as an application-specific user exit.
- The exit cannot be written in COBOL.
- When CEEBINT is written in C/C++, the following must be coded so that SMP/E can maintain the CSECT and properly link the intended user exit:

  ```
  #pragma map(CEEBINT,"CEEBINT")
  ```
- The exit should be coded so that it returns for all unknown function codes.
- C or C++ constructs such as the `exit()`, `abort()`, `raise(SIGTERM)`, and `raise(SIGABRT)` functions terminate the enclave.
- A PL/I EXIT or STOP statement terminates the enclave.
- Use the callable service IBMHKS to turn hooks on and off. For more information about IBMHKS, see *PL/I for MVS & VM Programming Guide*.
- C or C++ functions such as `exit()`, `abort()`, `raise(SIGTERM)`, and `raise(SIGABRT)` terminate the entire application as well as the user exit.

CEEBINT is invoked after the enclave has been established, after the Debug Tool initial command string has been processed, and before the invocation of compiled code. When invoked, it is passed a parameter list. The parameters are all fullwords and are defined as:

Number of arguments in parameter list (input)
A fullword binary integer
- On entry: Contains 7
- On exit: Not applicable

Return code (output)
A fullword binary integer
- On entry: 0
- On exit: Able to be set by the exit, but not interrogated by Language Environment

Reason code (output)
A fullword binary integer
- On entry: 0
- On exit: Able to be set by the exit, but not interrogated by Language Environment

Function code (input)
A fullword binary integer
- On entry: 1, indicating the exit is being driven for initialization
- On exit: Not applicable

User word (input/output)
A fullword binary integer
- On entry: Value of the user word (CEEAUE_USERWD) as set by the assembler user exit.

- On exit: The value set by the user exit, maintained by Language Environment and passed to subsequent user exits. It can be accessed from the `main()` function through the system programming facilities C `__xusr()` function.

Address of the main program entry point (input)
A fullword binary address

- On entry: The address of the routine that gains control first
- On exit: Not applicable

Exit List Address (output)
The address of the exit list control block, Exit_list

- On entry: 0
- On exit: 0, unless you establish a hook exit, in which case you would set this pointer and fill in relevant control blocks. The control blocks for Exit_list and Hook_exit are shown in the following figure.

As supplied, CEEBINT has only one exit defined that you can establish — the hook exit described by the Hook_exit control block. This exit gains control when hooks generated by the PL/I compiler TEST option are executed. You can establish this exit by setting appropriate pointers (A_Exits to Exit_list to Hook_exit).

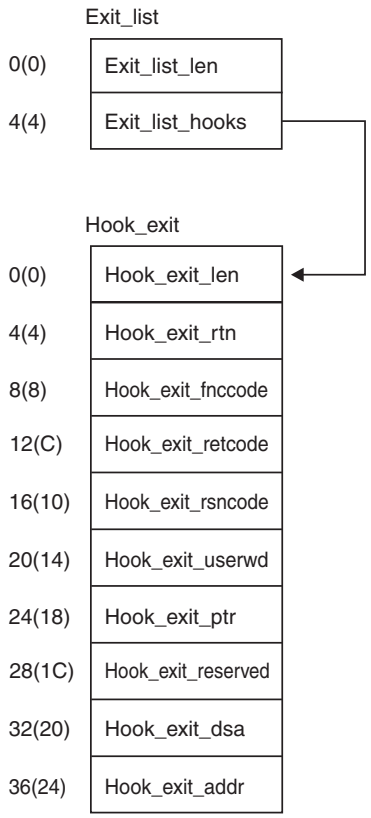

Figure 101. Exit_list and hook_exit control blocks

The control block Exit_list exit contains the following fields:

Exit_list_len
The length of the control block; it must be 1

Exit_list_hooks
The address of the Hook_exit control block

The control block for the hook exit must contain the following fields:

Hook_exit_len
The length of the control block

Hook_exit_rtn
The address of a routine you want invoked for the exit. When the routine is invoked, it is passed the address of this control block. Since this routine is invoked only if the address you specify is nonzero, you can turn the exit on and off.

Hook_exit_fnccode
The function code with which the exit is invoked. This is always 1.

Hook_exit_retcode
The return code set by the exit. You must ensure that it conforms to the following specifications:

0 Requests that the Debug Tool be invoked next

4 Requests that the program resume immediately

16 Requests that the program be terminated

Hook_exit_rsncode
The reason code set by the exit. This is always zero.

Hook_exit_userwd
The user word passed to the user exits CEEBXITA and CEEBINT

Hook_exit_ptr
An exit-specific user word

Hook_exit_reserved
Reserved

Hook_exit_dsa
The contents of register 13 when the hook was executed

Hook_exit_addr
The address of the hook instruction executed

Chapter 29. Assembler considerations

You can run applications written in assembler language in Language Environment. Applications written in Language Environment-conforming HLLs can also call or be called by assembler language applications. It is important to note that Fortran applications cannot call CEEHDLR or any other Language Environment callable service directly, therefore Fortran condition handling must be done by calling an assembler application to provide condition handling support. Most CEE services can be called from Fortran using AFHCEEN or AFHCEEF, as described in *z/OS Language Environment Runtime Application Migration Guide*.

This topic discusses considerations for assembler applications and introduces library routine retention, a function that can provide performance improvement for applications or subsystems running on z/OS.

You can write assembler language applications that conform to the XPLINK call linkage. The *z/OS XL C/C++ Programming Guide* describes how to create XPLINK assembler applications using the EDCXPRLG, EDCXEPLG, and EDCXCALL macros, and describes the XPLINK register conventions, parameter passing conventions and stack layout. *z/OS Language Environment Vendor Interfaces* has details on the XPLINK architecture that will be useful to an assembler programmer.

Whether you plan to execute a single-language assembler application or a multiple-language application containing assembler code, there are a number of restrictions you must follow under Language Environment. For example, to communicate with Language Environment and other applications running in the common run-time environment, your assembler application must preserve the use of certain registers and storage areas in a consistent way. Calling conventions for non-XPLINK assembler programs must follow the standard S/370 linkage conventions. Calling conventions for XPLINK assembler programs must follow the XPLINK linkage conventions. In addition, your assembler program is restricted from using some operating system services. These conventions and restrictions are described in this section..

Compatibility considerations

If you are coding a new assembler routine that you want to conform to the Language Environment interface or if your assembler routine calls Language Environment services, you must use the macros provided by Language Environment. For a list of these macros, see “Assembler macros” on page 448. *Language Environment-conforming assembler routine* refers to an assembler routine coded using the CEEENTRY and associated macros.

Control blocks

Assembler routines that rely on control blocks that were versions of C, COBOL, Fortran, and PL/I (for example, routines that check flags or switches in these control blocks) might not run under Language Environment. These control blocks might have changed.

© Copyright IBM Corp. 1991, 2015

Save areas

Any non-XPLINK assembler routine used within the scope of a Language Environment application must use standard S/370 save area conventions. Any XPLINK assembler routine used within the scope of a Language Environment application must use XPLINK save area conventions.

Note:

1. To call a COBOL program from assembler, set the first two bytes of the save area to hex zero.
2. Language Environment does not support the linkage stack.
3. A non-Language Environment-conforming assembler routine must have its own save area.

CICS

When running with a release of CICS TS earlier than CICS TS 3.1, Language Environment-conforming assembler **main** routines are not supported under CICS.

C and Fortran duplicate names

Several external names, shown in column one of Table 63, are identical in C and Fortran. If any of the names is used in an assembler program as an external reference, the C—not the Fortran—entity is obtained. If you wish to obtain the Fortran version, you can instead reassemble using the names shown in column two of Table 63 as a substitute for the C names in column one.

For example, if your assembler program currently references the Fortran ABS function with the instruction:

```
ABSADDR  DC    V(ABS)
```

you could instead reassemble it with the instruction:

```
ABSADDR  DC    V(A#ABS)
```

to obtain the Fortran function as before. The C versions of the functions might additionally require a different parameter-list format.

As an alternative to changing the conflicting names in an assembler routine and then reassembling, you can relink the existing routine following the procedure explained in "Resolving library module name conflicts between Fortran and C" on page 17.

Table 63. C external names and their analogous Fortran names

C external name	Fortran external name
ABS	A#ABS
ACOS	A#COS
ASIN	A#SIN
ATAN	A#TAN
ATAN2	A#TAN2
CLOCK	CLOCK#
COS	C#OS
COSH	C#OSH
ERF	E#RF

Table 63. C external names and their analogous Fortran names (continued)

C external name	Fortran external name
ERFC	E#RFC
EXIT	EXIT#
EXP	E#XP
GAMMA	G#AMMA
LOG	A#LOG
LOG10	A#LOG1
SIN	S#IN
SINH	S#INH
SQRT	S#QRT
TAN	T#AN
TANH	T#ANH

Register conventions

To communicate properly with assembler routines, you must observe certain register conventions on entry into the assembler routine (while it runs), and on exit from the assembler routine.

Language Environment-conforming assembler and non-Language Environment-conforming assembler each has its own requirements for register conventions when running under Language Environment.

Language Environment-conforming assembler

When you use the macros listed in "Assembler macros" on page 448 to write your Language Environment-conforming assembler routines, the macros generate code that follows the required register conventions.

On entry into the Language Environment-conforming non-XPLINK assembler main routine, registers must contain the following values because they are passed without change to the CEEENTRY macro:

R0 Undefined
R1 Address of the parameter list, or zero if no parameters are passed
R13 Caller's standard register save area
R14 Return address
R15 Entry point address

On entry into the Language Environment-conforming assembler subroutine, these registers must contain the following values when NAB=YES is specified on the CEEENTRY macro:

R0 Reserved
R1 Address of the parameter list, or zero
R12 Common anchor area (CAA) address
R13 Caller's DSA
R14 Return address
R15 Entry point address
All others
Undefined

On entry into a Language Environment-conforming assembler routine, CEEENTRY loads the caller's registers (R14 through R12) in the DSA provided by the caller. After it allocates a DSA (which sets the NAB field correctly in the new DSA), the first halfword of the DSA is set to hex zero and the backchain is set properly.

At all times while the Language Environment-conforming non-XPLINK assembler routine is running, R13 must point to the routine's DSA.

At call points, R12 must contain the common anchor area (CAA) address, except in the following cases:

- When calling a COBOL program
- When calling an assembler routine that is not Language Environment-conforming
- When calling a Language Environment-conforming assembler routine that specifies NAB=NO on the CEEENTRY macro

On exit from a Language Environment-conforming assembler routine, these registers contain:

R0 Undefined
R1 Undefined
R14 Undefined
R15 Undefined
All others
The contents they had upon entry

Non-Language Environment conforming assembler routines

When you run a non-Language Environment-conforming routine in Language Environment, you must observe the following conventions:

- R13 must contain the address of the executing routine's own register save area
- The register save area back chain must be set to a valid 31-bit address (if the address is a 24 bit address, the first byte of the address must be hex zeros)
- The first two bytes of the register save area must be hex zeros

Considerations for coding or running assembler routines

This topic summarizes some areas you might need to consider when coding or running an assembler routine under Language Environment.

Asynchronous interrupts

If an asynchronous signal is being delivered to a thread running with POSIX(ON), the thread is interrupted for the signal only when the execution is:

- In a user C routine, or in a user COBOL routine compiled with the THREAD compiler option
- Just before a return to a C routine or to a return to a user COBOL routine compiled with the THREAD compiler option
- Just before an invocation of a Language Environment library from a user routine

C routines or COBOL routines compiled with the THREAD compiler option may need to protect against asynchronous signals based on the application logic including the possible use of the POSIX signal-blocking function that is available.

Condition handling

Language Environment default condition handling actions occur for assembler routines unless you have registered a user-written condition handler using CEEHDLR (see *z/OS Language Environment Programming Reference* for more information about CEEHDLR).

Language Environment relinquishes all enclave-level resources that were obtained by Language Environment when the enclave terminates, and all process-level resources when the process terminates.

Access to the Inbound Parameter String

You can access the standardized form of the inbound parameter list for the assembler main routine any time after routine initialization by using one of the following:

- The CEE3PRM and CEE3PR2(query parameter string) callable service described in *z/OS Language Environment Programming Reference*.

  What CEE3PRM and CEE3PR2 return depends on the operating system you run under, and the runtime or compiler options you specify. See "What the enclave returns from CEE3PRM and CEE3PR2" on page 533 for more information.
- The PARMREG output value from the CEEENTRY macro described in "CEEENTRY macro— Generate a Language Environment-conforming prolog" on page 449.

Overlay Programs

Language Environment does not provide explicit support for overlay programs. If programs are overlaid, Language Environment imposes the following restrictions:

- All Language Environment routines and static data must be placed in the root segment.
- All named routines and static data referred to by Language Environment must be in the root segment.
- All ENTRY values or static data addresses passed to any Language Environment service must point to routines in the root segment.
- All routines in the save area chain must be in storage for the whole time that they are in the chain.
- All calls must be inclusive, not exclusive (see your Linkage Editor and Loader User's Guide for the definitions of these terms).
- Calls that cause a new overlay segment to be loaded must be between two routines in the same language (that is, they cannot be ILC calls).

CEESTART, CEEMAIN, and CEEFMAIN

Assembler programs cannot call or use directly CEESTART, CEEMAIN, or CEEFMAIN as a standard entry point. Results are unpredictable if this rule is violated.

When link-editing an application it must be possible for the link-editor to resolve CEESTART. As long as the NCAL link-editor option is not specified, CEESTART will be automatically resolved. If NCAL is used it becomes necessary to explicitly include CEESTART in the link-edit process.

Mode considerations

The CEEENTRY macro automatically sets the module to AMODE ANY and RMODE ANY. Therefore, when converting to Language Environment-conforming assembler, if data management macros had been coded using 24-bit addressing mode, they should be changed to use 31-bit addressing mode (see *z/OS DFSMS Macro Instructions for Data Sets*). If it is not possible to change all the modules making up the program to use 31-bit addressing mode (and none of the modules are already set to RMODE 24), then it will be necessary to use the RMODE=24 CEEENTRY option. Alternatively, the module can be set to RMODE 24 during the link-edit process. This is done by specifying the link-edit RMODE option on the invocation PARM or the SETOPT control statement.

Language Environment library routine retention (LRR)

Language Environment library routine retention is a function that provides a performance improvement for those applications or subsystems with the following attributes:

- The application or subsystem invokes programs that require Language Environment.
- The application or subsystem is not Language Environment-conforming. That is, Language Environment is not already initialized when the application or subsystem invokes programs that require Language Environment.
- The application or subsystem, while running under the same task, repeatedly invokes programs that require Language Environment.
- The application or subsystem is not using Language Environment preinitialization services.

Restriction: Language Environment library routine retention is not supported to run on CICS.

The use of library routine retention does not affect the behavior of applications other than improving their performance.

Language Environment provides a macro called CEELRR, which is used in an assembler program to initialize library routine retention and to terminate library routine retention. See “CEELRR macro — Initialize or terminate Language Environment library routine retention” on page 446 for details about the CEELRR macro.

In addition, Language Environment provides three sample programs that use the CEELRR macro:

CEELRRIN
: This routine uses the CEELRR macro to initialize a library routine retention environment that does not permit XPLINK applications. The source for this routine can be found in member CEELRRIN in SCEESAMP. The load module associated with this routine can be found in SCEERUN with member name CEELRRIN.

CEELRRXP
: This routine uses the CEELRR macro to initialize a library routine retention environment that permits XPLINK applications. The source for this routine can be found in member CEELRRXP in SCEESAMP. The load module associated with this routine can be found in SCEERUN with member name CEELRRXP.

CEELRRTR
This routine uses the CEELRR macro to terminate library routine retention. The source for this routine can be found in member CEELRRTR in SCEESAMP. The load module associated with this routine can be found in SCEERUN with member name CEELRRTR.

When library routine retention has been initialized, Language Environment keeps a subset of its resources in memory after the environment terminates. As a result, subsequent invocations of programs in the same task that caused Language Environment to be initialized are much faster because the resources can be reused without having to be reacquired and reinitialized.

When library routine retention has been initialized, the resources that Language Environment keeps in memory when it terminates include the following:

- Language Environment runtime load modules
- Language Environment storage associated with the management of the runtime load modules
- Language Environment storage for startup control blocks

When library routine retention is terminated, the resources that Language Environment kept in memory are freed. (Library routines are deleted and storage is freed.)

Note:

1. If library routine retention is initialized, and the task in which it is being used is terminated, the operating system frees the Language Environment resources as part of task termination.
2. 31-bit XPLINK applications are supported under the LRR environment.

Using library routine retention

If you are going to use library routine retention, you need to be aware of the following:

- Library routine retention cannot be used on CICS.
- To successfully initialize library routine retention or terminate library routine retention, Language Environment must not be currently initialized.

  For example, if you use CEELRR with ACTION=INIT in a Language Environment-conforming assembler program, library routine retention is not initialized, because the invocation of the assembler program caused Language Environment to be initialized.

Library routine retention and preinitialization

The Language Environment preinitialization services can be used while library routine retention is initialized. However, the Language Environment resources initialized and terminated with Language Environment preinitialization services are not kept in memory when library routine retention is initialized. There is no sharing of resources between Language Environment when initialized with preinitialization services and an environment initialized by invoking an HLL program without using preinitialization services. There is no performance benefit of library routine retention for those applications and subsystems that bring up a Language Environment preinitialized environment, and then use the preinitialization services to invoke programs that require Language Environment.

CEELRR macro — Initialize or terminate Language Environment library routine retention

CEELRR is used to tell Language Environment to initialize and terminate library routine retention. The macro generates reentrant code.

Syntax

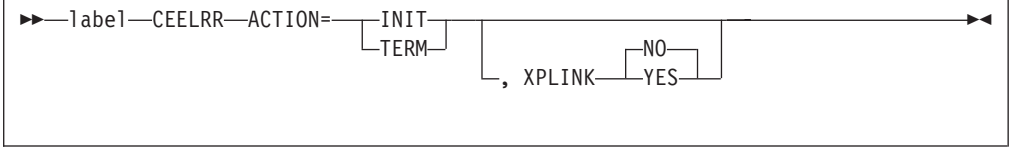

label
Assembler label on this macro generation.

ACTION=
The action to be performed by Language Environment with regard to library routine retention. Valid values are INIT and TERM. A value of INIT tells Language Environment to initialize library routine retention. A value of TERM tells Language Environment to terminate library routine retention. You must specify the ACTION value.

XPLINK=

The XPLINK keyword allows the application to specify whether XPLINK applications are permitted under the LRR environment. Valid values are YES and NO. When XPLINK applications are run under an LRR environment, the region size may need to be increased because an additional load module CELHV003 is kept in memory.

For ACTION=INIT, if the XPLINK= keyword is specified, valid values are YES or NO. If omitted, the default for the XPLINK= keyword is NO.

For ACTION=TERM, if the XPLINK= keyword is specified, it is ignored.

Usage notes:

1. The macro must be used in an assembler routine that is not Language Environment-conforming.
2. The contents of the following registers are destroyed by the macro invocation:
   - R14
   - R15: Upon return, contains the return code
   - R0
   - R1
3. The code generated by the macro expansion assumes that R13 has a standard RSA available.
4. One of the following return codes is put in R15 upon completion of the code generated by the CEELRR macro with ACTION=INIT:

   0 Library routine retention was successfully initialized.

   4 Library routine retention is already initialized. No action was taken.

   8 Library routine retention was not initialized; the parameter list is not recognized.

   12 Library routine retention was not initialized due to one of the following problems:

- There was insufficient storage.
- There was an error in an attempt to load CEEBINIT or CEEBLIBM.

16 Library routine retention was not initialized because Language Environment is currently initialized. This return code can occur in the following example scenarios:

- A program that is running with Language Environment calls an assembler program that uses CEELRR with ACTION=INIT.
- An assembler program calls IGZERRE to initialize a reusable environment, and then it uses CEELRR with ACTION=INIT.
- A reusable environment is established with the RTEREUS runtime option and a call is made to an assembler program that uses CEELRR with ACTION=INIT.

20 Library routine retention was not initialized because the Language Environment preinitialized environment has been established and is dormant. This return code can occur in the following example scenarios:

- An assembler program calls CEEPIPI to preinitialize Language Environment, and then it uses CEELRR with ACTION=INIT.
- An assembler program uses the PL/I preinitialize program interface, and then it uses CEELRR with ACTION=INIT.

5. One of the following return codes is put in R15 upon completion of the code generated by the CEELRR macro with ACTION=TERM:

0 Library routine retention was successfully terminated. All resources associated with library routine retention were freed.

4 Library routine retention is not initialized. No action was taken.

8 Library routine retention was not terminated; the parameter list is not recognized.

16 Library routine retention was not terminated because Language Environment is currently initialized. This return code can occur in the following example scenarios:

- A program that is running with Language Environment calls an assembler program that uses CEELRR with ACTION=TERM.
- An assembler program calls IGZERRE with the initialize function, and then it uses CEELRR with ACTION=TERM.
- A reusable environment is established with the RTEREUS runtime option and a call is made to an assembler program that uses CEELRR with ACTION=TERM.

20 Library routine retention was not terminated because the Language Environment preinitialized environment has been established and is dormant. This return code can occur in the following example scenarios:

- An assembler program calls CEEPIPI to preinitialize Language Environment, and then it uses CEELRR with ACTION=TERM.
- An assembler program uses the PL/I preinitialize program interface, and then it uses CEELRR with ACTION=TERM.

Assembler macros

Language Environment provides the following macros to assist in the entry and exit of assembler routines, to map the CAA and DSA, to generate the appropriate fields in the program prolog area (PPA), to create assembler DLLs, and to use DLLs from assembler routines:

- CEEENTRY generates a Language Environment-conforming prolog. You must use CEEENTRY in conjunction with the following macros, except for CEELOAD. (See "CEEENTRY macro— Generate a Language Environment-conforming prolog" on page 449 for syntax.)
- CEETERM generates a Language Environment-conforming epilog and terminates the assembler routine. (See "CEETERM macro — Terminate a Language Environment-conforming routine" on page 452 for syntax.)
- CEECAA generates a CAA mapping. (See "CEECAA macro — Generate a CAA mapping" on page 453 for syntax.)
- CEEDSA generates a DSA mapping. (See "CEEDSA macro — Generate a DSA mapping" on page 453 for syntax.)
- CEEPPA generates the appropriate fields in the PPA in your assembler routine. The fields describe the entry point of a Language Environment block. (See "CEEPPA macro — Generate a PPA" on page 454 for syntax.)
- CEELOAD loads a Language Environment-conforming assembler routine; the target of CEELOAD must be a subroutine. (See "CEELOAD macro — Dynamically load a Language Environment-conforming routine" on page 456 for syntax.)
- CEEFETCH dynamically loads a routine and returns information about a routine. (See "CEEFETCH macro — Dynamically load a routine" on page 459 for syntax.)
- CEEFTCH generates a FTCHINFO mapping. (See "CEEFTCH macro — Generate a FTCHINFO mapping" on page 463 for syntax.)
- CEEGLOB is used to extract the Language Environment product information at assembly-time. (See "CEEGLOB macro — Extract Language Environment product information" on page 466 for syntax.)
- CEERELES dynamically deletes a routine. (See "CEERELES macro — Dynamically delete a routine" on page 467 for syntax.)
- CEEPCALL calls a Language Environment-conforming routine. It is similar to the CALL macro, except that it supports dynamic calls to routines in a DLL. (See "CEEPCALL macro — Call a Language Environment-conforming routine" on page 468 for syntax.)
- CEEPDDA defines a data item in WSA, or declares a reference to an imported data item. (See "CEEPDDA macro — Define a data item in the writeable static area (WSA)" on page 470 for syntax.)
- CEEPLDA returns the address of a data item defined by CEEPDDA. It is intended to be used to get the address of imported or exported variables residing in the Writeable Static Area (WSA). (See "CEEPLDA macro — Returns the address of a data item defined by CEEPDDA" on page 472 for syntax.)

For a description of Assembler macros to assist in writing XPLINK assembler routines, see *z/OS XL C/C++ Programming Guide*.

Note: All keyword parameter values, such as YES, NO, ANY, must be specified in upper case. for example, MAIN=YES, AMODE=ANY.

CEEENTRY macro— Generate a Language Environment-conforming prolog

CEEENTRY provides a Language Environment-conforming prolog. Code is generated in cooperation with the CEEPPA macro. (See "CEEPPA macro — Generate a PPA" on page 454 for syntax.) The macro generates reentrant code.

You must use CEEENTRY in conjunction with the macros CEETERM, CEECAA, CEEDSA, and CEEPPA.

CEEENTRY assumes that the registers contain what is described in "Register conventions" on page 441 for assembler main routines.

To call an assembler routine from an existing Fortran program, or to make a static call from OS/VS COBOL or VS COBOL II, CEEENTRY must specify NAB=NO and MAIN=NO.

Syntax

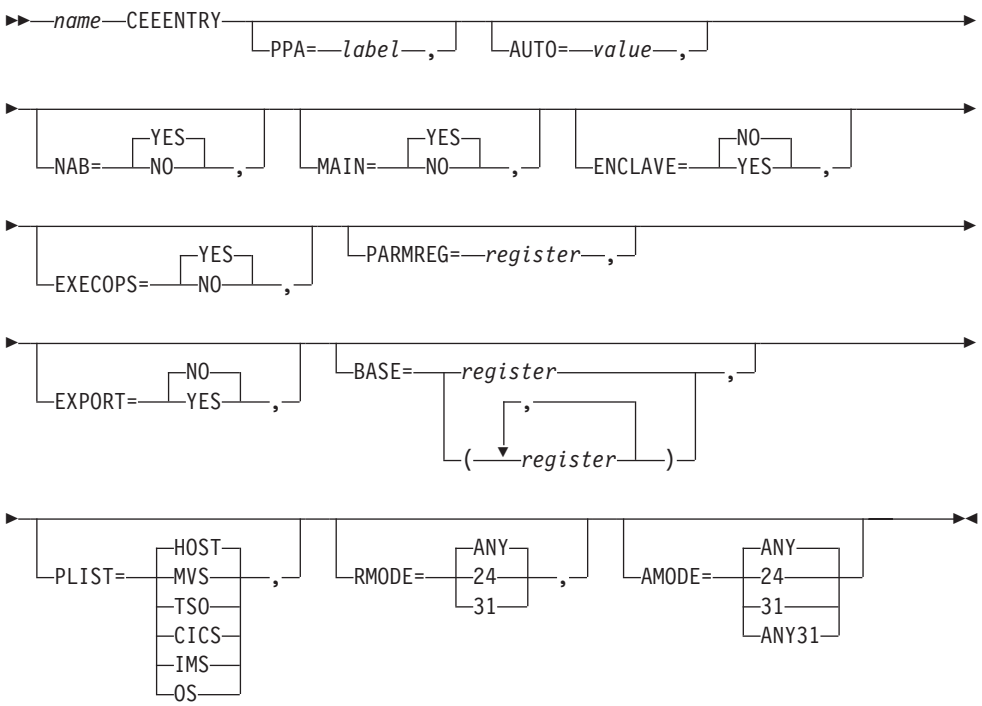

name
The entry name (and the CSECT name, if this is the first call to CEEENTRY).

PPA=
The *label* of the corresponding PPA (Program Prolog Area) generated using the CEEPPA macro. If unspecified, the name "PPA" is used.

AUTO=
The total number of bytes (rounded up to a doubleword) used by prolog code for the DSA and local automatic variables that are to be allocated for the duration of this routine. If unspecified, the default is only the size of the DSA without any automatic variables. This default size is indicated by the label

CEEDSASZ (the DSA mapping generated by the CEEDSA macro). See "CEEDSA macro — Generate a DSA mapping" on page 453 for syntax).

NAB=

YES
Indicates that the previous save area has a NAB (next available byte) value; YES is the default. In general,

- If your routine is always called by a Language Environment-conforming assembler routine, specify NAB=YES.
- If your routine can be called by a non-Language Environment-conforming assembler routine, specify NAB=NO.

NO Indicates that the previous save area may not contain the NAB. Code to find the NAB is generated. This parameter is ignored if MAIN=YES is specified. You must specify MAIN=NO and NAB=NO to call an assembler routine from an existing Fortran application, or to make a static call from OS/VS COBOL or VS COBOL II.

MAIN=

YES
Indicates that the Language Environment environment should be brought up. Designates this assembler routine as the main routine in the enclave. YES is the default. If you specify MAIN=YES, you cannot specify register 2 as the base register for the module. MAIN=YES is not supported under CICS on releases earlier than CICS TS 3.1.

The following is accomplished by the macro invocation:

- The caller's registers (14 through 12) are saved in a DSA provided by the caller.
- The base register is set (see **BASE=** for more information).
- Register 12 is set with an address of CEECAA.
- Register 13 is set with an address of CEEDSA.
- PARMREG (Register 1 is the default) is set based on PLIST.
- All other registers are undefined.

NO Designates this assembler routine as a subroutine in the enclave. **NO** should be specified when the Language Environment environment is already active and only prolog code is needed. You must specify NAB=NO in order to call an assembler routine from an existing Fortran application, or to make a static call from OS/VS COBOL or VS COBOL II.

The following is accomplished by the macro invocation:

- The caller's registers (14 through 12) are saved in a DSA provided by the caller.
- The base register is set (see **BASE=** for more information).
- Register 13 is set with an address of CEEDSA.
- PARMREG is set (see PARMREG.)
- All other registers are undefined.

ENCLAVE=

YES
Indicates that Language Environment should always create a nested enclave for this program. ENCLAVE=YES may only be specified when

MAIN=YES. The use of ENCLAVE=YES will result in increased storage and CPU usage. Most applications will not need a new enclave; therefore ENCLAVE=NO should be used.

NO Indicates that a new enclave is not needed for this program. If you do not specify a value, NO is assumed.

EXECOPS=

YES
Indicates that the main routines are to honor runtime options on the inbound parameter string. This option is applicable only when MAIN=YES is in effect for the routine. The EXECOPS setting is ignored if MAIN=NO is specified. If you do not specify a value, YES is assumed.

NO Indicates that there are no runtime options in the inbound parameter string. Language Environment considers the entire inbound parameter string as program arguments, but does not attempt to process runtime options and remove them from the inbound parameter string.

PARMREG=

Specifies the *register* to hold the inbound parameters. If you do not specify a value, register 1 is assumed.

For MAIN=YES, the value in the PARMREG is determined by PLIST. For MAIN=NO and PARMREG=1 (PARMREG defaults to 1), register 1 is restored from the save area passed to the routine. When MAIN=NO and PARMREG is not equal to 1, register 1 is used to load the specified PARMREG. Then, register 1 is used for the CEEENTRY expansion.

EXPORT=

Indicates whether this entry point will be exported.

NO This entry point can only be called from other routines that are link-edited into the same program object.

YES
This entry point will be marked as an exported DLL function. If you specify EXPORT=YES, then you must use the GOFF Assembler option.

If you want the exported name to be a long name and/or mixed case, follow the CEEENTRY macro with an ALIAS statement. For more details on DLLs, including full sample assembler DLL routines, see Chapter 4, “Building and using dynamic link libraries (DLLs),” on page 43.

For the entry point to be available as an exported DLL function, you must specify the DYNAM(DLL) binder option, and the resulting program object must reside in a PDSE.

BASE=

Establishes the *register(s)* that you specify here as the base register(s) for this module. If you do not specify a value, register 11 is assumed; register 12 cannot be used. When more than one register is specified, the registers must be separated by commas and enclosed in parentheses. The same register cannot be specified more than once.

PLIST=

Indicates that the main routines are to honor PLIST format on the inbound parameter string. This option is applicable only when MAIN=YES is in effect for the routine. The PLIST settings are ignored if MAIN=NO is specified. If you do not specify a value, HOST format is assumed.

The HOST format sets the specified PARMREG based on the environment in which the program is executing. For example, in an environment that assumes CEEENTRY defaults, register 1 is set equal to the address of a one word PLIST that contains the address of a field with a halfword-prefixed string of user parameters. To obtain the inbound parameter list as specified, use PLIST (OS).

RMODE=
Allows the specification of the modules CSECT RMODE setting. Valid settings for this option are *ANY*, *24* and *31*. The default, if unspecified, is *ANY*.

AMODE=
Allows the specification of the modules CSECT AMODE setting. Valid settings for this option are *24*, *31*, *ANY31*, and *ANY*. The default, if unspecified, is *ANY*.

Usage notes:

1. The CEEENTRY macro automatically sets the module to AMODE ANY and RMODE ANY. Therefore, when converting to Language Environment-conforming assembler, if data management macros had been coded using 24-bit addressing mode, they should be changed to use 31-bit addressing mode (see *z/OS DFSMS Macro Instructions for Data Sets*). If it is not possible to change all the modules making up the program to use 31-bit addressing mode (and none of the modules are already set to RMODE 24), then it will be necessary to use the RMODE=24 CEEENTRY option. Alternatively, the module can be set to RMODE 24 during the link-edit process. This is done by specifying the link-edit RMODE option on the invocation PARM or the SETOPT control statement.
2. Unless otherwise indicated, no register values should be expected to remain unchanged after the code generated by CEEENTRY has executed.
3. When more than one CEEENTRY macro invocation occurs in an assembly, it is the programmer's responsibility to code DROP statements for the base registers set up by the previous invocation of the CEEENTRY macro.

CEETERM macro — Terminate a Language Environment-conforming routine

CEETERM provides a Language Environment-conforming epilog and is used to terminate, or return from, a Language Environment-conforming routine. If used with a main entry, the appropriate call is made to Language Environment termination routines.

Syntax

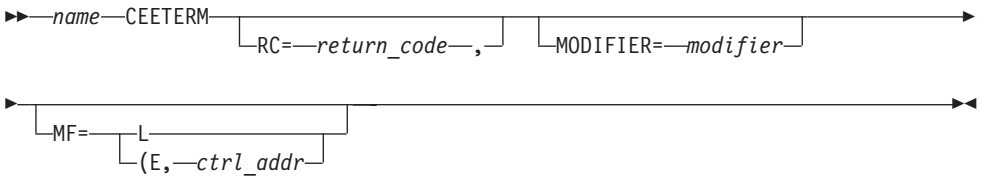

name
The entry name (and the CSECT name, if this is for a main entry).

RC=
The *return code* that is to be placed into R15 after the **MODIFIER** is added to

it, if terminating a main routine. If returning from a Language Environment subroutine, the return code itself is placed into R15, without **MODIFIER** being added to it. *return code* can be a fixed constant, variable, or register 2–12.

MODIFIER=
The return code *modifier* that is multiplied by the appropriate value (based upon the operating system), added to the return code, and placed into R15 (if terminating a main routine). The MODIFIER is independently placed into R0. Modifier can be a fixed constant, variable, or register 2-12.

MF=L
Indicates the list form of the macro. A remote control program parameter list for the macro is defined, but the service is not invoked. The list form of the macro is usually used in conjunction with the execute form of macro.

MF=(E, *ctrl_addr*)
Indicates the execute form of the macro. The service is invoked using the remote control program parameter list addressed by *ctrl_addr* (normally defined by the list form of the macro, it cannot be register 0).

Usage notes:

1. The MF=L and the MF=(E, *ctrl_addr*) parameters cannot both be coded for the same macro invocation. If neither is coded, the immediate form of the macro is used. The immediate form generates an inline parameter list, and generates nonreentrant code.
2. The address of the name can be specified as a register using parentheses ().
3. The macro invocation destroys the registers R1, R14, and R15.
4. MF=L and MF=(E, ctrl_addr) can only be used when CEEENTRY MAIN=YES has been specified. These parameters are not necessary when CEEENTRY MAIN=NO has been specified; in that environment, CEETERM automatically generates reentrant code.

CEECAA macro — Generate a CAA mapping

Syntax

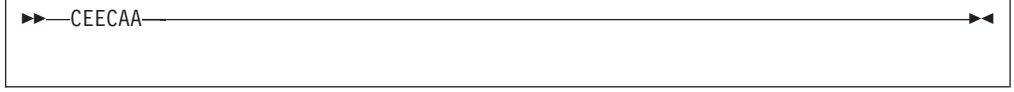

CEECAA is used to generate a common anchor area (CAA) mapping. This macro has no parameters, and no label can be specified. CEECAA is required for the CEEENTRY macro.

CEEDSA macro — Generate a DSA mapping

Syntax

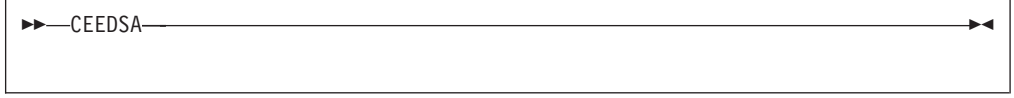

CEEDSA is used to generate a dynamic save area (DSA) mapping. This macro has no parameters, and no label can be specified. The minimum size of the DSA is contained in an assembler EQUATE CEEDSASZ. CEEDSA is required for the CEEENTRY macro.

CEEPPA macro — Generate a PPA

CEEPPA is used to generate the Language Environment program prolog area (PPA). The PPA defines constants that describe the entry point of a Language Environment block. It is generated at the time of assembly; one PPA is generated per entry point. The CEEPPA macro is required for the CEEENTRY macro.

Syntax

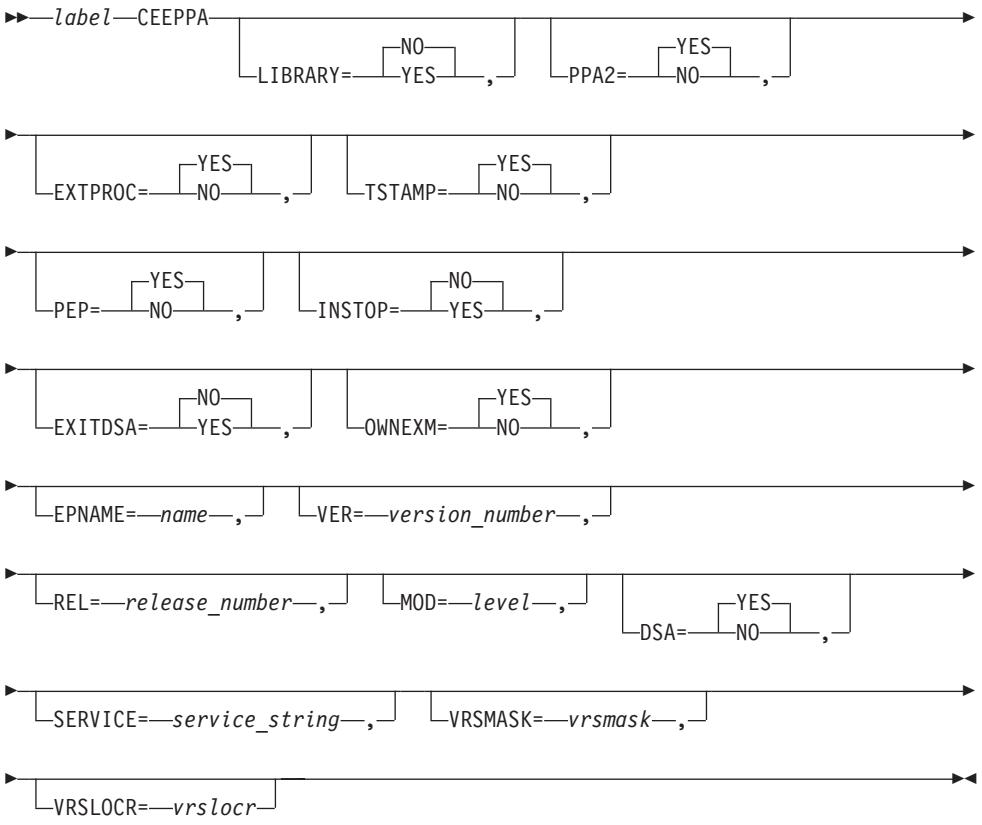

label
The name of the PPA. If you specified a name for **PPA** in the CEEENTRY macro, you must specify the same name here. If you did not specify a name for **PPA** in the CEEENTRY macro, you must specify "PPA" (the CEEENTRY default PPA label) as the name here.

LIBRARY=
Indicates whether the routine is a Language Environment library routine. Valid values for LIBRARY are **YES** and **NO**. If you do not specify a value, **NO** is used. Use of this IBM-supplied default is recommended.

PPA2=
Instructs the macro to generate a PPA2 or suppress the generation of the PPA2. A PPA2 is a program prolog area that defines constants for the CSECT. Only

one is used, independent of the number of entry points. Valid values for PPA2 are **YES** and **NO**. If you do not specify a value, **YES** is used, which generates a PPA2 field.

EXTPROC=
Indicates if this routine is an external procedure or an internal procedure. Valid values for EXTPROC are **YES** and **NO**. If you do not specify a value, **YES** is used, which indicates that the block is an external procedure.

TSTAMP=
Indicates whether a timestamp, indicating the date and time of assembly, should be generated. Valid values for TSTAMP are **YES** and **NO**. If you do not specify a value, **YES** is used and a timestamp is generated.

PEP=
Indicates if this entry point is primary or secondary. A secondary entry point is an alternate entry point. Some Language Environment facilities, such as CEE3DMP, report information based on the primary entry point only.

Valid values for PEP are **YES** and **NO**. If you do not specify a value, **YES** is used, which indicates that this is a primary entry point (PEP).

INSTOP=
Indicates if time spent in this routine should be attributed to the program (rather than to the "system"). Valid values for INSTOP are **YES** and **NO**. If you do not specify a value, **NO** is used, which indicates that time should be attributed to the system. The information is intended to be used by application performance analysis tools.

EXITDSA=
Indicates whether the code should gain control on GOTO out of block. Valid values for EXITDSA are **YES** and **NO**. If you do not specify a value, **NO** is used, which indicates that the code does not gain control for GOTO out of block. Use of this IBM-supplied default is recommended.

OWNEXM=
Specifies if this routine should participate in condition handling according to the exception model of its own member language (OWNEXM=YES), or according to the exception model inherited from the caller's member language (OWNEXM=NO). Valid values for OWNEXM are **YES** and **NO**. If you do not specify a value, **YES** is used. Use of this IBM-supplied default is recommended.

EPNAME=
Indicates the entry point *name*. If you do not specify a value, the name of the CSECT is used.

VER=
The *version number* for the routine. This field is not interrogated by Language Environment. Valid values for VER are 1 through 99. If you do not specify a value, 1 is used.

REL=
The *release number* for the routine. This field is not interrogated by Language Environment. Valid values for REL are 1 through 99. If you do not specify a value, 1 is used.

MOD=
The modification *level* for the routine. This field is not interrogated by Language Environment. Valid values for MOD are 1 through 99. If you do not specify a value, **0** is used.

DSA=YES
Indicates whether this procedure has a DSA. Valid values for DSA are **YES** and **NO**. If you do not specify a value, **YES** is used, indicating that the code has an associated DSA. Use of this IBM-supplied default is recommended.

SERVICE=
Indicates the service level string for the routine. The service string length and contents are located following the timestamp and version information. The first 7 bytes of the service level string is treated as character data for the Service column of a traceback. When the *SERVICE* keyword is in use, the timestamp is generated automatically, the *TSTAMP* option is defaulted to YES even when the user specified *TSTAMP=NO*. The *SERVICE* keyword can only be specified on the first CEEPPA macro in the assembler source, all other instances of the keyword are ignored.

VRSMASK=
The save bit mask field for vector registers, in hexdecimal format. Valid values for VRSMASK are 00 through FF. VRSMASK and VRSLOCR must be provided at the same time for the optional area of vector registers.

VRSLOCR=
The locator field for vector registers, in hexdecimal format. Valid values for VRSLOCR are 00 through FF. VRSMASK and VRSLOCR must be provided at the same time for the optional area of vector registers.

CEELOAD macro — Dynamically load a Language Environment-conforming routine

CEELOAD is used to dynamically load a Language Environment-conforming routine. It does not create a nested enclave, so the target of CEELOAD must be a subroutine.

There is no corresponding service to delete Language Environment-conforming routines. You should not use system services to delete modules that you load using CEELOAD; during thread (if SCOPE=THREAD) or enclave (if SCOPE=ENCLAVE) termination, Language Environment deletes modules loaded by CEELOAD.

Using CEELOAD imposes restrictions on further dynamic loading or dynamic calls or fetches; results are unpredictable if these rules are violated.

- You cannot dynamically load a routine with CEELOAD that has already been dynamically loaded by CEELOAD or has been fetched or dynamically called.
- You cannot fetch or dynamically call a routine that has already been dynamically loaded by CEELOAD.

If CEELOAD completes successfully, the address of the loaded routine is found in R15. You can then invoke the routine using BALR 14,15 (or BASSM 14,15).

Language Environment returns the address of the target routine with the high-order bit indicating the addressing mode (AMODE) of the routine. Language Environment-enabled programs return in the AMODE in which they are entered. Because Language Environment does not provide any AMODE switching on behalf of the target routine, you must provide any necessary AMODE switching code.

The macro invocation destroys the following registers:

- R0
- R1
- R14

- R15 (upon return, contains the target address)

When the macro code is expanded and run, the following assumptions are made:
- R12 points to the CAA.
- R13 has a standard Language Environment DSA available.

Syntax

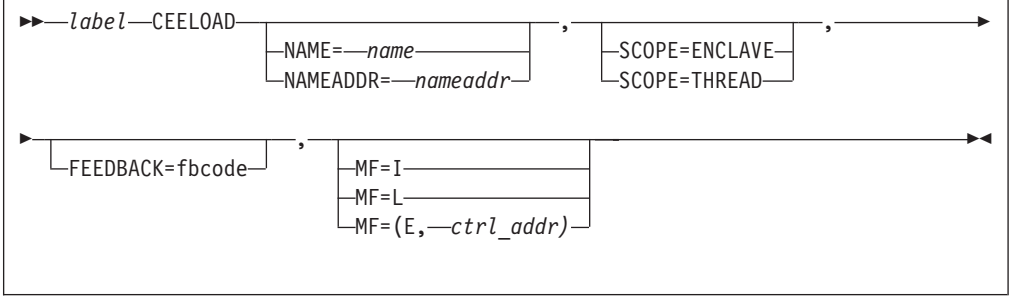

label
The assembler label you give to this invocation of the macro. A label is required if MF=L; otherwise it is optional.

NAME=
The name of the entry point to be loaded by Language Environment. If MF=I or MF=L, you must specify either NAME or NAMEADDR, but not both.

NAMEADDR=
The address of a halfword-prefixed name that should be loaded by Language Environment. This can be an A-type address or a register (register 2 through 11). If MF=I or MF=L, you must specify either NAME or NAMEADDR, but not both. The address of the name can be specified as a register using parentheses ().

SCOPE=THREAD
Indicates that the load is to be scoped to the thread level. Modules loaded at the thread level are deleted automatically at thread termination.

SCOPE=ENCLAVE
Indicates that the load is to be scoped to the enclave level. Modules loaded at the enclave level are deleted automatically at enclave termination. SCOPE=ENCLAVE is the default.

FEEDBACK=
The name of a variable to contain the resulting 12-byte feedback token. If you omit this parameter, any nonzero feedback token that results is signaled. The following symbolic conditions might be returned from this service:

Symbolic feedback code	Severity	Message number	Message text
CEE000	0	—	The service completed successfully.
CEE3DC	3	3500	Not enough storage was available to load *module-name*.
CEE3DD	3	3501	The module *module-name* was not found.
CEE3DE	3	3502	The module name *module-name* was too long.

Symbolic feedback code	Severity	Message number	Message text
CEE3DF	3	3503	The load request for module *module-name* was unsuccessful.
CEE39K	1	3380	The target load module was not recognized by Language Environment.
CEE38M	3	3350	CEE3ADM or CEE3MBR could not find the event handler.
CEE38N	3	3351	CEE3ADM or CEE3MBR could not properly initialize the event handler.
CEE38V	2	3359	The module or language list is not supported in this environment.

MF=I
Indicates the immediate form of the macro. The immediate form generates an inline parameter list, and generates nonreentrant code.

MF=L
Indicates the list form of the macro. A remote control program parameter list for the macro is defined, but the service is not invoked. The list form of the macro is usually used in conjunction with the execute form of the macro.

MF=(E, *ctrl_addr*)
Indicates the execute form of the macro. The service is invoked using the remote control program parameter list addressed by *ctrl_addr* (normally defined by the list form of the macro).

Only one of the MF=I, MF=L, or MF=(E, *ctrl_addr*) parameters can be coded for the same macro invocation. If none is coded, the immediate form of the macro is used.

The following example illustrates an invocation of the CEELOAD macro.

```
CLOADTST CEEENTRY MAIN=YES,PPA=LEPPA,AUTO=DSALGTH
*********************************************************
* Copy parameters to be passed to CEELOAD
*********************************************************
MVC LOADPL(PLLEN),PLLIST
*********************************************************
* Invoke CEELOAD to load module HIWORLD
*********************************************************
CEELOAD MF=(E,LOADPL)           LOAD ROUTINE
*********************************************************
* Pass control to HIWORLD
*********************************************************
BALR 14,15                      INVOKE ROUTINE
*********************************************************
* Invoke CEETERM to return to Caller
*********************************************************
CEETERM RC=(15),MF=(E,DSARPL)   BACK TO CALLER
*********************************************************
* Constants
*********************************************************
PLLIST   CEELOAD MF=L,NAME=HIWORLD,SCOPE=THREAD
PLLEN    EQU *-PLLIST
LEPPA   CEEPPA ,
*********************************************************
* Mappings
*********************************************************
CEECAA ,                LE/370 COMMON ANCHOR AREA
*********************************************************
```

```
* Workarea and DSA
*******************************************************
CEEDSA ,                LE/370 DYNAMIC STORAGE AREA
DSARPL CEETERM MF=L
DS    0F
LOADPL   DS    XL(PLLEN)
DSALGTH  EQU   *-CEEDSA
END
```

Usage notes:

1. Language Environment issues the appropriate load command according to the Language Environment search order (described in "Program library definition and search order" on page 81) and performs the necessary dynamic updates to accommodate the new load module.
2. Language Environment performs any language-related initialization required.
3. You cannot use CEELOAD to load a program object which was created using the program management binder. You can, however, use CEEFETCH for loading program objects.
4. You cannot use CEELOAD to load C++ modules, because C++ modules are always compiled RENT and have writable static that is not switched when control passes between functions.
5. `#pragma linkage (xxx,fetchable)` should not be used. If a module is linked with `#pragma linkage (xxx,fetchable)`, it will have CEESTART as an entry point, which is not allowed, and the module could have writable static requirements that would not be handled using CEELOAD.

   When using CEELOAD to load a C module, the function or functions within this module must not be designated as fetchable. The `#pragma linkage (xxx,fetchable)` directive should not be coded in the module. Instead, such modules should be fetched using the `fetch()` function.
6. `#pragma linkage (xxx,COBOL)` should not be used.
7. For C users, the load module entry point must be the function name, and cannot be CEESTART (nested environment initialization causes Language Environment to abend). You cannot use CEELOAD to load any function that uses writable static. The module must be built NORENT and the entry point must be a C function, not CEESTART.
8. This macro should not be used for DLLs.

CEEFETCH macro — Dynamically load a routine

CEEFETCH is used to dynamically load a routine.

Use the CEERELES macro to delete routines loaded with CEEFETCH. You should not use system services to delete modules that you load using CEEFETCH; during thread (if SCOPE=THREAD), enclave (if SCOPE=ENCLAVE), or process (if SCOPE=PROCESS) termination, Language Environment deletes modules loaded by CEEFETCH.

If CEEFETCH completes successfully, the address of the target routine is found in R15. You can then invoke the routine using the BALR 14,15 (or BASSM 14,15) instruction.

Language Environment returns the address of the target routine with the high-order bit indicating the addressing mode (AMODE) of the routine. Language Environment-enabled programs return in the AMODE in which they are entered.

Because Language Environment does not provide any AMODE switching on behalf of the target routine, you must provide any necessary AMODE switching code.

For example:

```
     LA     2,RESET  SAVE BRANCH ADDRESS AND CURRENT
     BSM    2,0      AMODE IN REGISTER 2
     BASSM 14,15     CALL COBOL PROGRAM
     BSM    0,2      BRANCH AND RESTORE AMODE FROM REG. 2
RESET DS     OH
```

The macro invocation destroys the following registers:
- R0
- R1
- R14
- R15 (upon return, contains the target address)

When the macro code is expanded and run, the following assumptions are made:
- R12 points to the CAA.
- R13 has a standard Language Environment DSA available.

Syntax

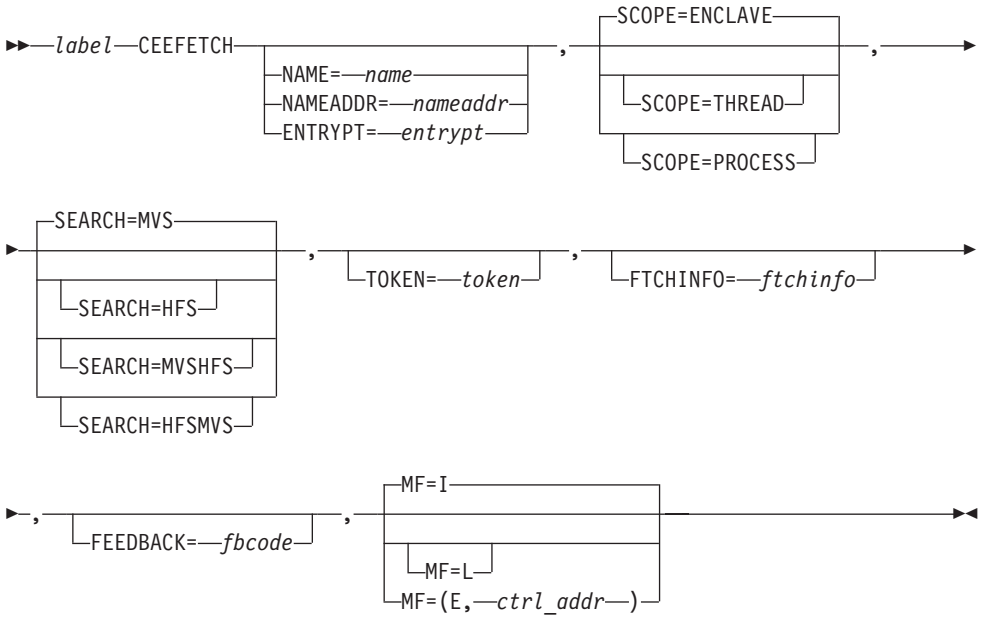

label
The assembler label you give to this invocation of the macro. A label is required if MF=L is specified; otherwise, it is optional.

NAME=*name*
The name of the entry point to be loaded by Language Environment. The maximum length of *name* is eight characters. If a longer name is needed, the NAMEADDR parameter must be used. You cannot specify NAME and NAMEADDR together.

NAMEADDR=*nameaddr*
The address of a halfword-prefixed name that should be loaded by Language Environment. A halfword prefix name is a string where the first two bytes identify the length of a name string and are followed by the name string itself. This can be an A-type address or a register (register 2 through 11). The address of the name can be specified as a register using parentheses (). The maximum length of the name is 1023 characters. You cannot specify NAME and NAMEADDR together.

ENTRYPT=entrypt
The name of a fullword address variable containing the entry point for a module that has been previously loaded or the register (enclosed in parentheses) containing the entry point for a module that has been previously loaded. The *NAME* and *NAMEADDR* keywords are mutually exclusive with ENTRYPT. The *SEARCH* keyword is ignored when ENTRYPT is specified. The *FTCHINFO* keyword is required when ENTRYPT is specified. A corresponding "delete" using CEERELES can be done if CEEFETCH returns successfully.

SCOPE=THREAD
Indicates that the load is to be scoped to the thread level. Modules loaded at the thread level are deleted automatically at thread termination.

SCOPE=ENCLAVE
Indicates that the load is to be scoped to the enclave level. Modules loaded at the enclave level are deleted automatically at enclave termination; this is the default.

SCOPE=PROCESS
Indicates that the load is to be scoped to the process level. Modules loaded at the process level are deleted automatically at process termination.

TOKEN=*token*
The name of a variable to contain the resulting 4-byte token. This variable must be passed to the CEERELES macro if the load module is to deleted. If MF=I or MF=L are specified, you must specify TOKEN.

SEARCH=MVS
Indicates that only the MVS file system is to be searched for the load module; this is the default.

SEARCH=HFS
Indicates that only the HFS file system is to be searched for the load module.

SEARCH=MVSHFS
Indicates that the MVS file system is to be searched first and then the HFS file system for the load module.

SEARCH=HFSMVS
Indicates that the HFS file system is to be searched first and then the MVS file system for the load module.

FEEDBACK=*fbcode*
The name of a variable to contain the resulting 12-byte feedback token. If you omit this parameter, any nonzero feedback token that results is signaled. The following symbolic conditions might be returned from this service:

Symbolic feedback code	Severity	Message number	Message text
CEE000	0	—	The service completed successfully.

Symbolic feedback code	Severity	Message number	Message text
CEE3DC	3	3500	Not enough storage was available to load *module-name*.
CEE3DD	3	3501	The module *module-name* was not found.
CEE3DE	3	3502	The module name *module-name* was too long.
CEE3DF	3	3503	The load request for module *module-name* was unsuccessful.
CEE39K	1	3380	The target load module was not recognized by Language Environment.
CEE38M	3	3350	CEE3ADM or CEE3MBR could not find the event handler.
CEE38N	3	3351	CEE3ADM or CEE3MBR could not properly initialize the event handler.
CEE3N9	2	3817	The member event handler did not return a usable function pointer.
CEE38V	2	3359	The module or language list is not supported in this environment.
CEE3DV	3	3519	The version specified in the CEEFTCH control block passed to the CEEFETCH macro is not supported.
CEE3QS	1	3932	The system service CSVQUERY failed with return code <return_code> and reason code 0.

MF=I
Indicates the immediate form of the macro. The immediate form generates an inline parameter list and generates nonreentrant code. This is the default value.

MF=L
Indicates the list form of the macro. A remote control program parameter list for the macro is defined, but the service is not invoked. The list form of the macro is usually used in conjunction with the execute form of the macro.

MF=(E,*ctrl_addr*)
Indicates the execute form of the macro. The service is invoked using the remote control program parameter list addressed by *ctrl_addr* (usually defined by the list form of the macro).

Only one of the MF=I, MF=L, or MF=(E, *ctrl_addr*) parameters can be coded for the same macro invocation. If none is coded, the immediate form of the macro is used.

FTCHINFO=ftchinfo
The name of a fullword address variable containing the address of a previously allocated FTCHINFO storage area or the register (enclosed in parentheses) containing the address of a pre-allocated FTCHINFO storage area, where the resulting module information is to be stored. The user must set the CEEFTCH_VERSION field in the FTCHINFO storage area. This keyword is useful for retrieving information about a target module whose characteristics are unknown. If the module is identified as a Language Environment conforming AMODE 24 or AMODE 31 subroutine, then processing would be as normal, otherwise only a load of the target will be attempted. Only an AMODE 24 or AMODE 31 target module can be recognized as a DLL. An

AMODE 24 or AMODE 31 COBOL target will be classified as a subroutine and will follow the normal processing. The CEEFTCH macro provides the mapping for the FTCHINFO storage area. see the "CEEFTCH macro — Generate a FTCHINFO mapping" description for details about its contents.

Usage notes:

1. Language Environment issues the appropriate load command according to Language Environment search order (described in "Program library definition and search order" on page 81), and performs the necessary dynamic updates to accommodate the load module.
2. Language Environment performs any language-related initialization required.
3. Any COBOL, PL/I, or Fortran module that will be fetched, dynamically called, or CEEFETCHed more than once must be reentrant.
4. When using CEEFETCH to fetch a C module, the C module must contain `#pragma linkage (xxx,fetchable)`. For exceptions to this rule, see the `fetch()` information in *z/OS XL C/C++ Runtime Library Reference*.
5. CEEFETCH can be used in a non-XPLINK Assembler program to fetch an XPLINK-compiled module. The fetched XPLINK-compiled module must contain `#pragma linkage(xxx,fetchable).` The address of the target routine returned by CEEFETCH in R15 contains any necessary glue code to call an XPLINK routine from non-XPLINK, and can still be invoked using BALR 14,15. All rules and restrictions on the environment imposed by XPLINK still apply. See Chapter 3, "Using Extra Performance Linkage (XPLINK)," on page 29.
6. This macro should not be used for DLLs.
7. When using CEEFETCH to fetch a C++ module, the C++ module must contain #pragma linkage(xxx,fetchable) directive and must be declared extern "C". See *z/OS XL C/C++ Runtime Library Reference* for more information.
8. The Fortran compilers do not conform to the Language Environment interface conventions, thus Fortran targets will not be recognized as Language Environment conforming. See Fortran Migration Guide for further information.
9. The contents returned in R15 after a call to CEEFETCH should not be reused as input to a follow-up call to CEEFETCH. This scenario could result in the issue of the CEE3932W message.
10. In a multithread environment, using a CEEFETCH / BALR (or BASSM) / CEERELES sequence on more than one thread is not supported if the target routine is the same COBOL routine, even when the COBOL routine is enabled for multithreading. COBOL does not allow a CANCEL of a routine that is active on another thread.
11. In a multithread environment, using a CEEFETCH / BALR (or BASSM) / CEERELES sequence on more than one thread is not supported if the target routine is the same PL/I routine.

CEEFTCH macro — Generate a FTCHINFO mapping

CEEFTCH is used to generate a mapping for the FTCHINFO storage area. Module information can be returned from the CEEFETCH macro in a FTCHINFO storage area. No label can be specified for this macro.

The *FLAG* information provided for AMODE 64 modules is limited to the AMODE, if Language Environment-conforming, if XPLINK, and if SEGMENTED. A target that is recognized as an AMODE 24 or AMODE 31 DLL, will have the MAIN and

SUB bits turned OFF. The EP address for an AMODE 31 target will have the high order bit turned off and the EP64 address for an AMODE 64 target will have the low-order bit turned off.

When the ENTRYPT keyword is used with CEEFETCH in the CICS environment (running on the QR TCB), the load point address, load length, and module segment information will not be provided in the FTCHINFO storage area. The module segment information will also not be provided when the FTCHINFO keyword is used without ENTRYPT keyword in the CICS environment.

The user must set the CEEFTCH_VERSION field in CEEFTCH before invoking the CEEFETCH macro to return module information. (Currently the only valid value for CEEFTCH_VERSION is 1.) An unsupported version will result in the CEE3DV feedback code from CEEFETCH. See the CEEFTCH tables below for supported mapping versions.

Syntax

DSECT=YES
Indicates that a DSECT mapping should be generated. This is the default for the mapping if the DSECT option is not specified.

DSECT=NO
Indicates that a data area mapping should be generated.

The following tables show the format of the CEEFTCH mapping Version 1 (CEEFTCH_VERSION = 1).

Table 64. Structure of version 1 CEEFTCH

OFFSET Dec	OFFSET Hex	Type	Len	Name (Dim)	Description
0	(0)	STRUCTURE	64	CEEFTCH	Start of CEEFTCH
0	(0)	CHARACTER	8	CEEFTCH_EYE_CATCHER	eyecatcher
8	(8)	UNSIGNED	2	CEEFTCH_VERSION	Version requested
10	(A)	BIT(8)	1	CEEFTCH_FLAGS1	CEEFTCH flags1
10	(A)	BIT(1)	1	CEEFTCH_A24	X'80' target is AMODE 24
10	(A)	BIT(1) POS(2)	1	CEEFTCH_A31	X'40' target is AMODE 31
10	(A)	BIT(1) POS(3)	1	CEEFTCH_A64	X'20' target is AMODE 64
10	(A)	BIT(1) POS(4)	1	CEEFTCH_XPLINK	X'10' target is XPLINK
10	(A)	BIT(1) POS(5)	1	CEEFTCH_LE	X'08' target is Language Environment conforming
10	(A)	BIT(1) POS(6)	1	CEEFTCH_MAIN	X'04' target is MAIN
10	(A)	BIT(1) POS(7)	1	CEEFTCH_SUB	X'02' target is a SUB
10	(A)	BIT(1) POS(8)	1	CEEFTCH_DLL	X'01' target is DLL
11	(B)	BIT(8)	1	CEEFTCH_FLAGS2	CEEFTCH flags2

Table 64. Structure of version 1 CEEFTCH (continued)

OFFSET Dec	OFFSET Hex	Type	Len	Name (Dim)	Description
11	(B)	BIT(1)	1	CEEFTCH_SEGMENTED	X'80' target module is divided into multiple initial load segments (deferred load segments, if any, are not counted)
11	(B)	BIT(1) POS(2)	1	CEEFTCH_CICS	X'40' CICS environment
11	(B)	BIT(6) POS(3)	1	*	Available
12	(C)	SIGNED	4	*	Available
16	(10)	ADDRESS	8	CEEFTCH_CEESTART64	Address of 64bit CEESTART
16	(10)	SIGNED	4	*	
20	(14)	ADDRESS	4	CEEFTCH_CEESTART	Address of 31-bit CEESTART
24	(18)	ADDRESS	8	CEEFTCH_MOD64	Address of 64-bit target
24	(18)	SIGNED	4	*	
28	(1C)	ADDRESS	4	CEEFTCH_MOD	Address of 31-bit target
32	(20)	SIGNED	8	CEEFTCH_MOD_LEN64	Length of 64-bit target
32	(20)	SIGNED	4	*	
36	(24)	SIGNED	4	CEEFTCH_MOD_LEN	Length of 31-bit target
40	(28)	ADDRESS	8	CEEFTCH_EP64	Address of 64-bit EntryPt
40	(28)	SIGNED	4	*	
44	(2C)	ADDRESS	4	CEEFTCH_EP	Address of 31-bit EntryPt
48	(30)	UNSIGNED	8	*	Available
56	(38)	UNSIGNED	8	*	Available

Table 65. Cross reference for version 1 CEEFTCH

Name	Offset	Level
CEEFTCH	0	1
CEEFTCH_A24	A	3
CEEFTCH_A31	A	3
CEEFTCH_A64	A	3
CEEFTCH_CEESTART	14	3
CEEFTCH_CEESTART64	10	2
CEEFTCH_CICS	B	3
CEEFTCH_DLL	A	3
CEEFTCH_EP	2C	3
CEEFTCH_EP64	28	2
CEEFTCH_EYE_CATCHER	0	2
CEEFTCH_FLAGS1	A	2
CEEFTCH_FLAGS2	B	2
CEEFTCH_LE	A	3
CEEFTCH_MAIN	A	3
CEEFTCH_MOD	1C	3

Table 65. Cross reference for version 1 CEEFTCH (continued)

Name	Offset	Level
CEEFTCH_MOD_LEN	24	3
CEEFTCH_MOD_LEN64	20	2
CEEFTCH_MOD64	18	2
CEEFTCH_SEGMENTED	B	3
CEEFTCH_SUB	A	3
CEEFTCH_VERSION	8	2
CEEFTCH_XPLINK	A	3

CEEGLOB macro — Extract Language Environment product information

CEEGLOB is used to generate global symbols that provide Language Environment product information at assembly time.

Syntax

label is an optional assembler label that a user can give to this invocation of the macro.

The CEEGLOB macro generates the following global assembler variables to match the information returned by CEEGPID:

&CEEGPRO (alias &GPRO)
Product number

&CEEGVER (alias &GVER)
Product version

&CEEGREL (alias &GREL)
Product release

&CEEGMOD (alias &GMOD)
Product modification level

&CEEGENV (alias &GENV)
OS environment from which the macro was invoked. Set to 3 for z/OS.

These global assembler variables can be tested and used at assembly time to verify availability of services and function that require specific levels of Language Environment or operating systems.

Note: If you need to make a decision concerning Language Environment and z/OS levels at runtime instead of assembly time, use CEEGPID instead. See *z/OS Language Environment Programming Reference* for a description of CEEGPID.

CEERELES macro — Dynamically delete a routine

CEERELES is used to dynamically delete a routine. The macro invocation destroys the following registers:

- R0
- R1
- R14
- R15

When the macro code is expanded and run, the following assumptions are made:

- R12 points to the CAA.
- R13 has a standard Language Environment DSA available.

Syntax

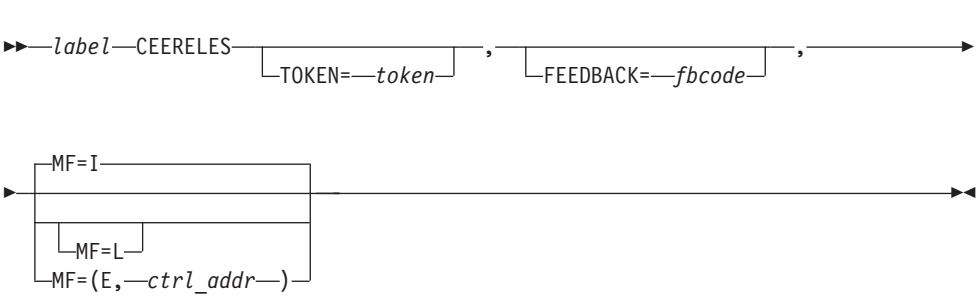

label
The assembler label you give to this invocation of the macro. A label is required if MF=L is specified; otherwise, it is optional.

TOKEN=*token*
The name of a variable that contains the token returned by the CEEFETCH macro. If MF=I or MF=L, you must specify TOKEN.

FEEDBACK=*fbcode*
The name of a variable to contain the resulting 12-byte feedback token. If you omit this parameter, any nonzero feedback token that results is signaled. The following symbolic conditions might be returned from this service:

Symbolic feedback code	Severity	Message number	Message text
CEE000	0	—	The service completed successfully.
CEE38N	3	3351	An event handler was unable to process a request successfully.
CEE39K	1	3380	The target load module was not recognized by Language Environment.
CEE3DG	3	3504	Delete service request for *module-name* was unsuccessful.
CEE3E0	3	3520	The token passed to the CEERELES macro was invalid.

MF=I
Indicates the immediate form of the macro. The immediate form generates an inline parameter list, and generates nonreentrant code.

MF=L
Indicates the list form of the macro. A remote control program parameter list for the macro is defined, but the service is not invoked. The list form of the macro is usually used with the execute form of the macro.

MF=(E,*ctrl_addr*)
Indicates the execute form of the macro. The service is invoked using the remote control program parameter list addressed by *ctrl_addr* (usually defined by the list form of the macro).

Only one of the MF=I, MF=L, or MF=(E, ctrl_addr) parameters can be coded for the same macro invocation. If none is coded, the immediate form of the macro is used.

Usage notes:

1. Language Environment issues the appropriate operating system delete command and performs the necessary dynamic updates to accommodate the deleted load module.
2. Language Environment performs any language-related cleanup required.
3. This macro should not be used for DLLs.
4. In a multithread environment, using a CEEFETCH / BALR (or BASSM) / CEERELES sequence on more than one thread is not supported if the target routine is the same COBOL routine, even when the COBOL routine is enabled for multithreading. COBOL does not allow a CANCEL of a routine that is active on another thread.
5. In a multithread environment, using a CEEFETCH / BALR (or BASSM) / CEERELES sequence on more than one thread is not supported if the target routine is the same PL/I routine.

CEEPCALL macro — Call a Language Environment-conforming routine

The CEEPCALL macro passes control to a control section at a specified entry point. The target of CEEPCALL can be resolved either statically (link-edited with the same program object) or dynamically (imported from a DLL). The only required positional parameter is the name of the called entry point. This name is case-sensitive, and can be up to 255 characters in length. The optional parameter list will be pointed to by General Purpose Register (GPR) 1.

Since only REENTRANT Assembler code is supported by this macro, it must be specified as a combination of LIST and EXECUTE forms so that the parameter list can be built in automatic (that is, stack) storage.

The CEEPCALL macro does not generate any return codes. A return code may be placed in GPR 15 by the called program.

GPRs 1, 14, and 15 are not preserved by this macro.

Syntax

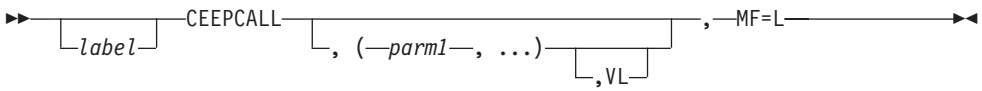

or

Syntax

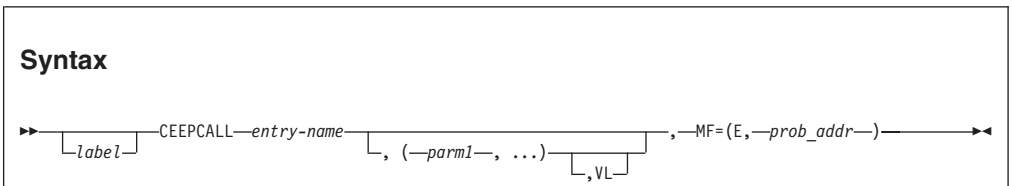

label
Optional symbol beginning in column 1.

entry-name
Specifies the entry name of the program to be given control. This entry name can reside in the same program object, or can be an exported DLL function.

(parm1, ...)
One or more optional parameters to be passed to the called program, separated by commas. In the list form, these are specified as A-type addresses, and in the execute form are RX-type addresses or specified as registers (2) - (12).

To create the parameter list, the calling program creates a list of addresses of each parameter in the order designated. In the execute form of the macro, GPR 1 contains the address of the parameter list when the program receives control. (If no parameters are coded, GPR 1 is not altered.) See Figure 103 on page 470.

VL Code VL only if the called program can be passed a variable number of parameters. VL causes the high-order bit of the last address parameter to be set to 1; the bit can be checked to find the end of the list.

MF=L
Creates the list form of the CEEPCALL macro to construct a nonexecutable problem program parameter list. This list form generates only ADCONs of the address parameters. You should refer to this problem program parameter list in the execute form of a CEEPCALL macro.

MF=(E,prob_addr)
Creates the execute form of the CEEPCALL macro, which can refer to and modify a remote problem program parameter list. Only executable instructions and a function descriptor representing the entry point are generated.

Usage notes:

1. This macro requires the `GOFF` Assembler option
2. This macro requires the binder to link edit, and the `RENT` and `DYNAM(DLL)` binder options. You also need the `CASE(MIXED)` binder option if the entry-name is mixed case.
3. The output from the binder must be a PM3 (or higher) format program object, and therefore must reside in either a PDSE or a UNIX file system.

For more information about DLLs, including full sample assembler DLL routines, see Chapter 4, "Building and using dynamic link libraries (DLLs)," on page 43. The following example illustrates an invocation of the CEEPCALL macro to call the routine named Bif1 with no parameters:

```
DLLAPPL  CEEENTRY MAIN=YES,PPA=DLLPPA
*        Symbolic Register Definitions and Usage
R15      EQU   15            Entry point address
*
        CEEPCALL Bif1,MF=(E,)
*
         SR    R15,R15
RETURN   DS   0H
         CEETERM  RC=(R15),MODIFIER=0
*
DLLPPA   CEEPPA
         LTORG
         CEEDSA
         CEECAA
         END      DLLAPPL
```

Figure 102. Example calling routine named Bif5 with no parameters:

The following example illustrates an invocation of the CEEPCALL macro to call the routine named Bif5 passing 5 integer parameters:

```
DLLAPPL  CEEENTRY MAIN=YES,PPA=DLLPPA,AUTO=AUTOSZ
*        Symbolic Register Definitions and Usage
R15      EQU   15            Entry point address
*
THECALL  CEEPCALL Bif5,(PARM1,PARM2,PARM3,PARM4,PARM5),VL,MF=(E,PARMS)
*
         SR    R15,R15
RETURN   DS   0H
         CEETERM  RC=(R15),MODIFIER=0
*
PARM1    DC    A(15)
PARM2    DC    A(33)
PARM3    DC    A(45)
PARM4    DC    A(57)
PARM5    DC    A(99)
DLLPPA   CEEPPA
         LTORG
         CEEDSA
PARMS    CEEPCALL ,(0,0,0,0,0),MF=L
AUTOEND  DS    0D
AUTOSZ   EQU   AUTOEND-CEEDSA
         CEECAA
         END      DLLAPPL
```

Figure 103. Example calling routine named Bif5 passing 5 integer parameters:

CEEPDDA macro — Define a data item in the writeable static area (WSA)

CEEPDDA can be used to define data in WSA, and optionally specify it as either exported or imported data.

If the CEEPDDA macro is followed by data constants, it is declared data, and must be followed by a subsequent CEEPDDA invocation with only the `END` parameter to mark the end of the declared data. If there are no subsequent data constants, a reference is created for the imported data.

Syntax

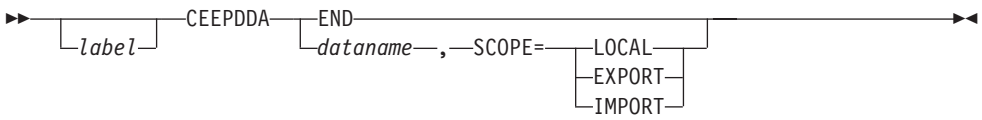

label
Optional label beginning in column 1.

dataname
Specifies the name of the data item. It is case sensitive and can be up to 255 characters in length. This entry name can reside in the same program object, or can be an exported DLL function.

SCOPE= {LOCAL|EXPORT|IMPORT}
Optional keyword parameter that results in the data being exported if SCOPE=EXPORT is specified and this instance of CEEPDDA is to declare data, or the data being imported if SCOPE=IMPORT is specified and this instance of CEEPDDA generates a reference to data (i.e. no data constants follow macro). The use of SCOPE=LOCAL can be used to declare data in WSA that is not exported.

END
The use of CEEPDDA with the END parameter is used to indicate the end of this defined data item, and must be used in conjunction with an invocation of CEEPDDA with the SCOPE=EXPORT or SCOPE=LOCAL keyword parameter.

Usage notes:

1. This macro requires the GOFF Assembler option.
2. This macro requires the binder to link-edit, and the RENT and DYNAM(DLL) binder options. You will also need the CASE(MIXED) binder option if the *dataname* is mixed case.
3. The output from the binder must be a PM3 (or higher) format program object, and therefore must reside in either a PDSE or the HFS.

For more details on DLLs, including full sample assembler DLL routines, see Chapter 4, “Building and using dynamic link libraries (DLLs),” on page 43.

The following example illustrates how to export data from Assembler. The first exported data item is an integer with the initial value 123, and the second exported data item is the character string "Hello World" with a terminating NULL (x'00') character:

```
CEEPDDA DllVar,SCOPE=EXPORT
DC      A(123)
CEEPDDA END
CEEPDDA DllStr,SCOPE=EXPORT
DC      C'Hello World'
DC      X'00'
CEEPDDA END
```

The following example illustrates how to import the variable named Biv1 into Assembler.

```
CEEPDDA Biv1,SCOPE=IMPORT
```

CEEPLDA macro — Returns the address of a data item defined by CEEPDDA

CEEPLDA is used to obtain the address of a local, imported, or exported data item. The required *dataname* label will name the data item, is case sensitive, and can be up to 255 characters in length.

Registers 0, 14, and 15 are not preserved by this macro.

Syntax

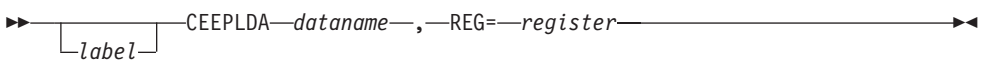

label
Optional label beginning in column 1.

dataname
Specifies the name of the data item whose address will be returned. It is case sensitive and can be up to 255 characters in length.

REG=
The numeric value of the register to contain the address of the data identified by dataname. Registers 0, 14, and 15 cannot be used.

Usage notes:

1. This macro requires the GOFF Assembler option.
2. This macro requires the binder to link-edit, and the RENT and DYNAM(DLL) binder options. You will also need the CASE(MIXED) binder option if the *dataname* is mixed case.
3. The output from the binder must be a PM3 (or higher) format program object, and therefore must reside in either a PDSE or the HFS.

For more details on DLLs, including full sample assembler DLL routines, see Chapter 4, “Building and using dynamic link libraries (DLLs),” on page 43.

The following example illustrates how to obtain the address of an imported variable in WSA and store an integer value into it. This particular example uses a corresponding CEEPDDA instance for an imported variable, but an exported or local variable would also work.

```
* Obtain address of imported variable Biv1 in register 9
         CEEPLDA Biv1,REG=9
* Set value of imported variable to 123
         LA    R8,123
         ST    R8,0(,R9)
...
         CEEPDDA Biv1,SCOPE=IMPORT
```

Example of assembler main routine

Figure 104 on page 473 shows a simple assembler main routine. In the example, the Language Environment environment is established, a message showing control is received in the routine, and the Language Environment environment terminates with a zero return code passed in R15 to the invoker.

If you write an assembler main routine, nominate the routine as a load module entry point using the END statement, as Figure 104 shows. Otherwise, you must explicitly declare the routine as the entry point at link-edit time.

```
*COMPILATION UNIT: LEASMMN
* ===================================================================
*
*        A simple main assembler routine that brings up the
*        LE/370 environment, prints a message in the main routine,
*        and returns with a return code of 0, modifier of 0.
*
* ===================================================================
MAIN     CEEENTRY PPA=MAINPPA
*
*        Invoke CEEMOUT to issue a message for us
*
         CALL  CEEMOUT,(STRING,DEST,0),VL   Omitted feedback code
*
*   Terminate the LE/370 environment and return to the caller
*
         CEETERM  RC=0,MODIFIER=0
* ===================================================================
*              CONSTANTS AND WORKAREAS
* ===================================================================
*
DEST     DC    F'2'
STRING   DC    Y(STRLEN)
STRBEGIN DC    C'In the main routine'
STRLEN   EQU   *-STRBEGIN
MAINPPA  CEEPPA  ,                Constants describing the code block
         CEEDSA  ,                Mapping of the dynamic save area
         CEECAA  ,                Mapping of the common anchor area
         END   MAIN               Nominate MAIN as the entry point
```

Figure 104. Example of a simple main assembler routine

Example of an assembler main calling an assembler subroutine

Following is a simple assembler main routine that calls the DISPARM subroutine shown in "DSPARM subroutine example" on page 474.

```
*COMPILATION UNIT: LEASMSB
* ===================================================================

*
*        A simple main assembler routine brings up Language
*        Environment, calls a subroutine, and returns with
*        a return code of 0.
*
* ===================================================================
SUBXMP   CEEENTRY PPA=XMPPPA,AUTO=WORKSIZE
         USING WORKAREA,R13
*
* -------------------------------------------------------------------
*
* Invoke CEEMOUT to issue the greeting message
*
         CALL  CEEMOUT,(HELLOMSG,DEST,FBCODE),VL,MF=(E,CALLMOUT)
*
* No plist to DISPARM, so zero R1. Then call it.
*
         SR    R01,R01
         CALL  DISPARM
*
* Invoke CEEMOUT to issue the farewell message
*
```

```
         CALL  CEEMOUT,(BYEMSG,DEST,FBCODE),VL,MF=(E,CALLMOUT)
*
* Terminate Language Environment and return to the caller
*
         CEETERM  RC=0
* ===================================================================
*              CONSTANTS
* ===================================================================
*
HELLOMSG DC    Y(HELLOEND-HELLOSTR)
HELLOSTR DC    C'Hello from the sub example.'
HELLOEND EQU   *
*
BYEMSG   DC    Y(BYEEND-BYESTART)
BYESTART DC    C'Terminating the sub example.'
BYEEND   EQU   *
*
DEST     DC    F'2'               Destination is the LE message file
*
XMPPPA   CEEPPA  ,                Constants describing the code block
* ===================================================================
*        The Workarea and DSA
* ===================================================================
WORKAREA DSECT
         ORG   *+CEEDSASZ         Leave space for the DSA fixed part
CALLMOUT CALL  ,(,,),VL,MF=L      3-argument parameter list
*
FBCODE   DS    3F                 Space for a 12-byte feedback code
*
*
         DS    0D
WORKSIZE EQU   *-WORKAREA
         CEEDSA  ,                Mapping of the dynamic save area
         CEECAA  ,                Mapping of the common anchor area
*
R01      EQU   1
R13      EQU   13
         END   SUBXMP             Nominate SUBXMP as the entry point
```

DSPARM subroutine example

```
*COMPILATION UNIT:  LEASMPRM
* ===================================================================
*
*        Shows an assembler subroutine that displays inbound
*        parameters and returns.
*
* ===================================================================
DISPARM  CEEENTRY PPA=PARMPPA,AUTO=WORKSIZE,MAIN=NO
         USING WORKAREA,R13
*
* -------------------------------------------------------------------
*
* Invoke CEE3PRM to retrieve the command parameters for us
*
         CALL  CEE3PRM,(CHARPARM,FBCODE),VL,MF=(E,CALL3PRM)
*
* Check the feedback code from CEE3PRM to see if everything worked.
*
         CLC   FBCODE(8),CEE000
         BE    GOT_PARM
*
* Invoke CEEMOUT to issue the error message for us
*
         CALL  CEEMOUT,(BADFBC,DEST,FBCODE),VL,MF=(E,CALLMOUT)
         B     GO_HOME                Time to go....
*
```

```
GOT_PARM DS    0H
*
* See if the parm string is blank.
*
         CLC   CHARPARM(80),=CL80' '   Is the parm empty?
         BNE   DISPLAY_PARM            No. Print it out.
*
* Invoke CEEMOUT to issue the error message for us
*
         CALL  CEEMOUT,(NOPARM,DEST,FBCODE),VL,MF=(E,CALLMOUT)
         B     GO_HOME                 Time to go....
*
DISPLAY_PARM   DS  0H
*
* Set up the plist to CEEMOUT to display the parm.
*
         LA    R02,80        Get the size of the string
         STH   R02,BUFFSIZE  Save it for the len-prefixed string
*
* Invoke CEEMOUT to display the parm string for us
*
         CALL  CEEMOUT,(BUFFSIZE,DEST,FBCODE),VL,MF=(E,CALLMOUT)
*
* Return to the caller
*
GO_HOME  DS    0H
         CEETERM  RC=0

* ====================================================================
*              CONSTANTS
* ====================================================================
*
DEST     DC    F'2'               Destination is the LE message file
CEE000   DS    3F'0'              Success feedback code
*
BADFBC   DC    Y(BADFBEND-BADFBSTR)
BADFBSTR DC    C'Feedback code from CEE3PRM was nonzero.'
BADFBEND EQU   *
*
NOPARM   DC    Y(NOPRMEND-NOPRMSTR)
NOPRMSTR DC    C'No user parm was passed to the application.'
NOPRMEND EQU   *
*
*
PARMPPA  CEEPPA ,                 Constants describing the code block
* ====================================================================
*        The Workarea and DSA
* ====================================================================
WORKAREA DSECT
         ORG   *+CEEDSASZ         Leave space for the DSA fixed part
*
CALL3PRM CALL  ,(,),VL,MF=L       2-argument parameter list
CALLMOUT CALL  ,(,,),VL,MF=L      3-argument parameter list
FBCODE   DS    3F                 Space for a 12-byte feedback code
*
BUFFSIZE DS    H                  Halfword prefix for following string
CHARPARM DS    CL255              80-byte buffer
*
*
         DS    0D
WORKSIZE EQU   *-WORKAREA
         CEEDSA  ,                Mapping of the dynamic save area
         CEECAA  ,                Mapping of the common anchor area
*
R02      EQU   2
R13      EQU   13
         END
```

Invoking callable services from assembler routines

A Language Environment-conforming assembler routine called by C should not invoke a z/OS UNIX API.

The interface to a callable service is the same as the interface previously described for assembler routines. An example of calling the CEEGTST (Get Heap Storage) callable service is shown in Figure 105.

A X'80000000' placed in the last parameter address slot indicates that the *fc* (feedback code) parameter is omitted.

```
*
*   R12 = A(CAA)
*   R13 = DSA
*   This example is non-reentrant.
*
         LA   R1,PLIST
         L    R15,=V(CEEGTST)
         BALR R14,R15
⋮
         PLIST    DS   0D
         DC   A(HEAP_ID)
         DC   A(SIZE)
         DC   A(ADDR)
         DC   A(X'80000000')
HEAP_ID  DC   F'0'                    Heap ID for the user
SIZE     DC   F'256'                  Size of storage to allocate
ADDR     DC   F'0'                    Address of allocated storage
```

Figure 105. Sample invocation of a callable service from assembler

System Services available to assembler routines

Language Environment provides a number of services that the host system typically provides. Each of these system-provided services belongs to one of three categories, depending on whether it can and ought to be used in Language Environment:

- The system-provided service can be used, but you must manage the resource; examples are ENQ and DEQ.
- The system-provided service can, but should not be used. The system-provided service might not have the desired effect. For example, instead of using GETMAIN and FREEMAIN, use the Language Environment dynamic storage callable services.
- The system-provided service should not be used. If you use this service, it directly interferes with the Language Environment environment. For example, any ESTAE or ESPIE that you issue interferes with Language Environment condition handling.

Whenever possible, non-Language Environment-conforming assembler routines should use the equivalent Language Environment services. A list of the equivalent services is provided in Table 66 on page 477.

Table 66. Equivalent host services provided by Language Environment

Host service	Language Environment equivalent	Usability
ABEND	Call CEESGL with a severity 4 condition, call CEE3ABD, or have the assembler user exit request an abend at termination.	Host services can, but should not, be used. Use of equivalent Language Environment services is advised. ABEND can be used as a last resort.
ATTACH/DETACH/CHAP[1]	No equivalent Language Environment function.	These services can be used.
ENQ/DEQ	No equivalent Language Environment function.	These services can be used.
(E)STAE/(E)SPIE/ SETRP/STAX	Use Language Environmentcondition management callable services: CEEHDLR, CEEHDLU, and CEESGL.	Host services should not be used; instances should be changed to use Language Environment condition management callable services. Otherwise, unpredictable results may occur.
EXEC CICS LOAD/DELETE	Use the Language Environment CEEFETCH assembler macro (see "CEEFETCH macro — Dynamically load a routine" on page 459).	Host services can be used, but you must manage the loaded routines.
EXEC CICS XCTL/LINK	No equivalent Language Environment function.	These services can be used.
GETMAIN/FREEMAIN EXEC CICS GETMAIN/ EXEC CICS FREEMAIN	For automatic storage (block-related), use Language Environment's stack storage. For non-block-related storage (that is, the storage persists beyond the current activation), use Language Environment heap storage.	Host services can, but should not, be used. Use of equivalent Language Environment storage management services is advised. Any heap storage allocated by Language Environment will automatically be freed at termination.
LOAD/DELETE CVSRTLS	Use the Language Environment CEEFETCH assembler macro (see "CEEFETCH macro — Dynamically load a routine" on page 459).	If you are introducing a new language into the environment, host services must not be used. The new language is not properly initialized. If you are not introducing a new language into the environment, host services can be used. However, you must manage the loaded routines.
OPEN/CLOSE GET/PUT READ/WRITE	No equivalent Language Environment function.	Host services can be used.
PC (Program Call instruction)	High level language call statements, such as assembler BALR/BASSM.	Not supported by Language Environment.
SNAP	Call CEE3DMP.	This service can be used.
STIMER[2]	No equivalent Language Environment function.	This service can be used.
TIME	Call Language Environment date and time services.	This service can be used.
SVC LINK	No equivalent Language Environment function	This service can be used. For compatibility, Language Environment supports the LINK boundary crossing and treats it as a new enclave.
WAIT/POST/EVENTS[3]	No equivalent Language Environment function.	Host services can be used.

Table 66. Equivalent host services provided by Language Environment (continued)

Host service	Language Environment equivalent	Usability
WTO	Call CEEMOUT. This writes to the error log or the terminal.	Host services can be used.
XCTL	No equivalent Language Environment function.	Host services can, but should not, be used.

Notes:

1. When running with POSIX(ON), use the POSIX functions `pthread_create` and `pthread_exit` in place of the host system functions ATTACH and DETACH. You cannot use ATTACH, DETACH, or CHAP when running a PL/I multitasking application.
2. When running with POSIX(ON), use the C functions `ALARM` and `SLEEP` in place of the host system function STIMER.
3. When running with POSIX(ON), use the POSIX functions `pthread_mutex_lock` and `pthread_mutex_unlock` in place of the host system functions WAIT and POST.

Using the ATTACH macro

Figure 106 illustrates the concept of performing an OS ATTACH to a C, C++, nonmultitasking PL/I, or COBOL program, and thus establishing a separate Language Environment runtime environment. For each ATTACH to a Language Environment-conforming routine, another Language Environment runtime environment is added to the MVS address space. In COBOL, this is called multitasking; COBOL RES multitasking is supported only when all of the COBOL programs are compiled with Enterprise COBOL for z/OS, COBOL for OS/390 & VM, COBOL for MVS & VM, or COBOL/370 (not with OS/VS COBOL or VS COBOL II).

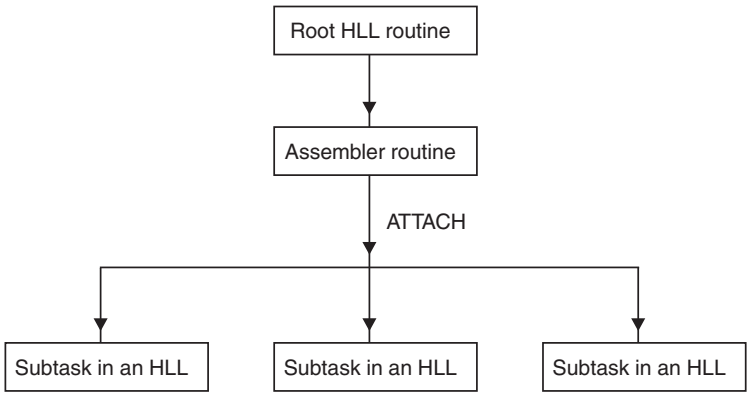

Figure 106. Issuing an ATTACH to Language Environment-conforming routines

When running with POSIX(ON), use the POSIX function `pthread_create` in place of OS ATTACH to create a new thread.

Currently, each Language Environment environment supports one process. Within the process each enclave supports a single thread.

To make best use of the ATTACH macro, you need to be aware of:

- Whether you are using POSIX(ON) in a multithread environment. You must not use the ATTACH macro in this case. If you are running a PL/I multitasking application, you cannot use the ATTACH macro.
- Whether the Language Environment environments share any resources.

- The MVS affinity aspects of each routine. For example, if you OPEN a file in one TCB, you must CLOSE it in the same TCB.
- The concurrency aspects of each routine. For example, you must ensure that two routines do not attempt to make contradictory or destructive changes to a data base.
- The termination order of all routines, particularly those in a new Language Environment environment.
- The compiler options and link-edit options when using COBOL.

Sharing resources

Unless you indicate otherwise, the environments share the same user files and message file. To avoid conflicting use of shared resources, you should specify different ddnames using the MSGFILE runtime option, and create distinctive user files for each environment.

Note: The ENQ suboption of the MSGFILE runtime option can be used to provide serialization around writes to the Message File. See *z/OS Language Environment Programming Reference* for more information.

z/OS affinity aspects

z/OS calls certain pairs of commands or procedures affinity aspects, and requires each member of the pair to be issued from the same TCB.

Some examples are:

OPEN/CLOSE

If you OPEN a file in one TCB, you must CLOSE it in the same TCB. You can process the file in as many environments as you wish; you simply need to open and close it in a single TCB.

LOAD/DELETE

GETMAIN/FREEMAIN

Language Environment heap storage, including storage associated with a call to the CEECRHP callable service, will have affinity to the TCB which created the heap. All get and free requests must be done from this single TCB.

A less obvious example is a DB2 table. You can update a DB2 table only in the same TCB in which it was created.

Concurrency aspects

Concurrency aspects include which routines have access to shared resources, and the timing of changes to those resources. Because Language Environment does not provide services to lock files, to serialize access to shared resources, or to synchronize changes to shared resources, you must manage the concurrency aspects of your environments.

Termination order

Language Environment does not coordinate termination order between multiple environments. Your routines are exited properly if you adhere to the hierarchical structure created by the TCB structure.

COBOL considerations

To run COBOL programs in more than one task with Language Environment, the COBOL programs must be Enterprise COBOL for z/OS, COBOL for OS/390 & VM, COBOL for MVS & VM, or COBOL/370. Running VS COBOL II programs in more than one task is not supported. When you use COBOL programs in more than one task, it is recommended that the COBOL programs be compiled with the RENT compiler option, and that the load modules be linked as REUS and RENT.

If a COBOL program running in one task dynamically calls a COBOL program that has already been dynamically called from another task, then the called program must be:

- Compiled with the RENT compiler option, or
- Compiled with the NORENT compiler option and link-edited with the NORENT and NOREUS linkage editor options.

Each copy of a COBOL program in each task will have its own unique copy of WORKING-STORAGE; you cannot share WORKING-STORAGE between tasks.

For example (see Figure 107), if a COBOL program calls an assembler program, which starts a new Subtask B, and COBOL program CBL3 in the new subtask dynamically calls COBOL program CBL2 which was previously dynamically called in the main task, then CBL2 must not be link-edited with the RENT or REUS link-edit options unless it is compiled with the RENT compiler option.

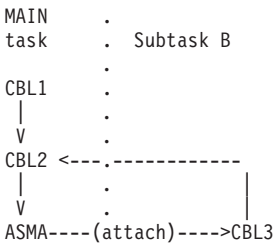

Figure 107. A dynamically-called COBOL program that dynamically calls another COBOL program

Using the SVC LINK macro

If you issue an SVC LINK, a new enclave is created. See “Creating child enclaves using SVC LINK” on page 528 for more information about nested enclaves created using the SVC LINK macro.

Chapter 30. Using preinitialization services

You can use preinitialization to enhance the performance of your application. Preinitialization lets an application initialize an HLL environment once, perform multiple executions using that environment, and then explicitly terminate the environment. Because the environment is initialized only once (even if you perform multiple executions), you free up system resources and allow for faster responses to your requests.

This topic describes the Language Environment-supplied routine, CEEPIPI, that provides the interface for preinitialized routines. Using CEEPIPI, you can initialize an environment, invoke applications, terminate an environment, and add an entry to the Preinitialization table (PreInit table). (The PreInit table contains the names and entry point addresses of routines that can be executed in the preinitialized environment.)

This topic also describes reentrancy considerations for a preinitialized environment, XPLINK considerations, user exit invocation, stop semantics, service routines, and an example of CEEPIPI invocation.

Before the introduction of a common runtime environment, introduced with Language Environment, some of the individual languages had their own form of preinitialization. This older form of preinitialization is supported by Language Environment, but it is not strategic. The following is a list of these older forms of preinitialization and some considerations for their use:

- C

  Language Environment supports the prior form of C preinitialization, through the use of an extended parameter list. For more information about this interface, see *z/OS XL C/C++ Programming Guide*.
- C++

  There is no prior form of preinitialization for C++.
- COBOL

  Language Environment supports the prior form of COBOL preinitialization, RTEREUS, ILBOSTP0, and IGZERRE. For more information about these interfaces, see the Enterprise COBOL for z/OS library (http://www-01.ibm.com/support/docview.wss?uid=swg27036733). This prior form of COBOL preinitialization cannot be used at the same time that Language Environment preinitialization is used.
- Fortran

  There is no prior form of preinitialization for Fortran.
- PL/I

  Language Environment supports the prior form of PL/I preinitialization, through the use of an Extended Parameter List. For more information about this interface, see the IBM Enterprise PL/I for z/OS library (http://www.ibm.com/support/docview.wss?uid=swg27036735). This prior form of PL/I preinitialization does not support PL/I multitasking applications.

© Copyright IBM Corp. 1991, 2015

Using preinitialization

From a non-Language Environment-conforming driver (such as assembler) you can use Language Environment preinitialization facilities to create and initialize a common run-time environment, execute applications written in a Language Environment-conforming HLL multiple times within the preinitialized environment, and terminate the preinitialized environment. Language Environment provides a preinitialized interface to perform these tasks.

In the preinitialized environment, the first routine to execute can be treated as either the main routine or a subroutine of that execution instance. Language Environment provides support for both of these types of preinitialized routines:

- Executing one main routine multiple times
- Executing subroutines multiple times

Language Environment preinitialization is commonly used to enhance performance for repeated invocations of an application or for a complex application where there are many repetitive requests and where fast response is required. For instance, if an assembler routine invokes either a number of Language Environment-conforming HLL routines or the same HLL routine a number of times, the creation and termination of that HLL environment multiple times is needlessly inefficient. A more efficient method is to create the HLL environment only once for use by all invocations of the routine.

The interface for preinitialized routines is a loadable routine called CEEPIPI. This routine is loaded as an RMODE(24) / AMODE(ANY) routine and returns in the AMODE of its caller when the request is satisfied.

CEEPIPI handles the requests and provides services for environment initialization, application invocation, and environment termination. All requests for services by CEEPIPI must be made from a non-Language Environment environment. (“Preinitialization interface” on page 488 contains a detailed description and information about how to invoke each of these services.) The parameter list for CEEPIPI is an OS standard linkage parameter list. Each request to CEEPIPI is identified by a function code that describes the CEEPIPI service and that is the first parameter in the parameter list. The function code is a fullword integer (for example, 1 = init_main, 2 = call_main).

The preinitialization services offered under Language Environment are listed in Table 68 on page 488. Preinitialization services do not support PL/I multitasking applications.

An example assembler program in “An example program invocation of CEEPIPI” on page 521 illustrates invocation of CEEPIPI for the function codes `init_sub`, `call_sub`, and `term`.

Using the PreInit table

Language Environment uses the PreInit table to identify the routines that are candidates for execution in the preinitialized environment, as well as optionally to load the routine when it is called. It is possible to have an empty PreInit table with no entries. The PreInit table contains the names and the entry point addresses of each routine that can be executed within the preinitialized environment. Candidate routines can be present in the table when the `init_main` or `init_sub` functions are invoked, or can be added to the table using (*add_entry*).

When the entry point address is supplied either as an entry in the initial PreInit table provided with initialization functions, or as specified on the add_entry function, the high order bit of the address must be set to indicate the addressing mode for the routine. If the high order bit is OFF the routine is called in 24 bit addressing mode and the address must be a valid 24 bit address. If the high order bit is ON the routine is called in 31 bit addressing mode and the address must be a valid 31 bit address.

C considerations

C routines that are the target of (*call_main*) or (*call_sub*) must be z/OS C routines.

- C main routines must be initialized with (init_main).
- C routines that are the target of (call_main) must contain a main().

C++ considerations

The preinitialization routines (*call_main*) or (*call_sub*) can support C++ applications.

- C++ main routines must be initialized with (init_main).
- C++ routines that are the target of (call_main) must contain a main().

COBOL considerations

COBOL programs that are the target of (*call_main*) or (*call_sub*) must be Enterprise COBOL for z/OS, COBOL for OS/390 & VM, COBOL for MVS & VM, or COBOL/370 programs.

Fortran considerations

Fortran routines cannot be the target of a CEEPIPI call.

PL/I considerations

PL/I routines that are the target of (call_main) or (call_sub) must be Enterprise PL/I for z/OS or PL/I for MVS & VM routines. OS PL/I Version 1 and OS PL/I Version 2 routines can run in the preinitialized environment only when called from PL/I routines that are the target of (call_main) or (call_sub).

Macros that generate the PreInit table

Language Environment provides the following assembler macros to generate the PreInit table for you: CEEXPIT, CEEXPITY, and CEEXPITS.

CEEXPIT: CEEXPIT generates a header for the PreInit table.

Syntax

table_name
Assembler symbolic name assigned to the first word in the PreInit table. The address of this symbol should be used as the *ceexptbl_addr* parameter in a (init_main) or a (init_sub) call.

NOSTOR=ABEND
Indicates that the system is to issue an abend if it cannot obtain storage for the preinitialization environment. This is the default.

NOSTOR=RC
Indicates that the system is to issue a return code if it cannot obtain storage for the preinitialization environment.

CEEXPITY: CEEXPITY generates an entry within the PreInit table.

Syntax

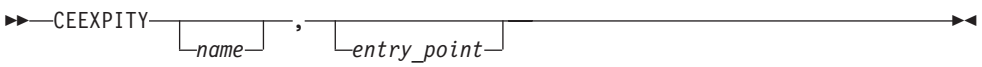

name
The first eight characters of the load name of a routine that can be invoked within the Language Environment preinitialized environment.

entry_point
The address of the load module that is to be invoked, or 0, to indicate that the module is to be dynamically loaded.

The high-order bit of the entry_point address must be set to indicate the addressing mode for the routine. If the high-order bit is OFF, the routine is called in 24 bit addressing mode and the address must be a valid 24 bit address. If the high-order bit is ON, the routine is called in 31 bit addressing mode and the address must be a valid 31 bit address.

You have the option of specifying either, both, or neither of the parameters:

- If *name* is omitted and *entry_point* is present, the comma must be present.
- If both parameters are omitted, the entry is a candidate for assignment to the PreInit table by a call to (add_entry).
- If both parameters are present, *name* is ignored and *entry_point* is used as the start of the routine.

Each invocation of the CEEXPITY macro generates a row in the PreInit table. The first entry is row 0, the second is row 1, and so on.

CEEXPITS: CEEXPITS identifies the end of the PreInit table. This macro has no parameters.

Syntax

Reentrancy considerations

You can make multiple calls to main routines by invoking CEEPIPI services and making multiple requests from a single PreInit table. In general, you should specify only reentrant routines for multiple invocations, or you might get unexpected results.

For example, if you have a reentrant C main program that is invoked using (*call_main*) and that uses external variables, then when your routine is invoked again, the external variables are re-initialized. Multiple executions of a reentrant main routine are not influenced by a previous execution of the same routine.

However, if you have a nonreentrant C main program that is invoked using (*call_main*) and that uses external variables, then when your routine is invoked again, the external variables can potentially contain last-used values. Local variables (those contained in the object code itself) might also contain last-used values. If main routines are allowed to execute multiple times, a given execution of a routine can influence subsequent executions of the same routine.

If you are calling `init_sub`, `init_sub_dp`, or `add_entry` for C/C++, the routines can either be naturally reentrant or may be compiled RENT and made reentrant by using the z/OS C Prelinker Utility. If the subroutine is made reentrant using the z/OS C Prelinker Utility, multiple instances of the same subroutine are influenced by the previous instance of the same subroutine.

If you have a nonreentrant COBOL program that is invoked using (*call_main*), condition IGZ0044S is signaled when the routine is invoked again.

PreInit XPLINK considerations

Language Environment preinitialization services (PreInit) support programs that have been compiled XPLINK. Specifically, it allows programs and subroutines that have been compiled XPLINK to be defined in the PreInit table. The following guidelines are provided for this new option:

- XPLINK CEEPIPI subroutines must be fetchable. For C programs, this is done using the #pragma linkage (fetchable) statement. For more details on fetchable subroutines, refer to the documentation on fetch() in *z/OS XL C/C++ Runtime Library Reference*.
- Non-XPLINK PreInit programs can run in an XPLINK PreInit environment, but there may be performance degradation since non-XPLINK programs will be required to execute linkage-switching glue code. If possible, consider having separate PreInit environments for running XPLINK and non-XPLINK programs.
- If a PreInit environment has been initialized as a non-XPLINK environment and either the main() function is XPLINK or the XPLINK(ON) runtime option has been specified, then the PreInit environment will be rebuilt as an XPLINK environment. This is a one-time occurrence that can not be undone.

Creating an XPLINK environment versus a non-XPLINK environment

When initializing a PreInit environment, you can select to create an XPLINK or a non-XPLINK environment. There are four methods used to initialize a PreInit environment; *init_main*, *init_main_dp*, *init_sub*, and *init_sub_dp*. In each case, a token of the preinitialized environment is passed back to the customer PreInit driver program. This token ID is used and passed as input when executing PreInit programs. The following rules will determine if the initialized PreInit environment will be XPLINK or non-XPLINK. You can make a one-time dynamic change in the PreInit environment from non-XPLINK to XPLINK by using (call_main) to an XPLINK main().

init_main: (Input: PreInit table pointer, no runtime options are passed as input)

- If the first program in the customer PreInit table is an XPLINK program, then an XPLINK environment will be initialized.

- If the first program in the PreInit table is a non-XPLINK program, then a non-XPLINK environment will be initialized.
- If the PreInit table is empty at initialization time, then a non-XPLINK environment will be initialized.

init_main_dp: (Input: PreInit table pointer, no runtime options are passed as input)

- If the first program in the customer PreInit table is an XPLINK program, then an XPLINK environment will be initialized.
- If the first program in the PreInit table is a non-XPLINK program, then a non-XPLINK environment will be initialized.
- If the PreInit table is empty at initialization time, then a non-XPLINK environment will be initialized.

init_sub: (Input: PreInit table pointer, and runtime options)

- If the first program in the customer PreInit table is an XPLINK program, then an XPLINK environment will be initialized.
- If the runtime options are passed as input and the XPLINK option is specified as XPLINK(ON), then an XPLINK environment will be initialized.
- If neither of the above are true (the first program in the customer PreInit table is a non-XPLINK program and the XPLINK runtime option is off or not specified), then a non-XPLINK environment will be initialized.

Note:

1. The runtime options you specify will apply to all of the subroutines that are called by (call_sub) function. This includes options such as XPLINK. Therefore, all of your subroutines must have the same characteristics and requirements needed for these runtime options.
2. If this is a non-XPLINK sub environment, then do not allow an XPLINK subroutine to be added to the table.

init_sub_dp: (Input: PreInit table pointer, and runtime options)

- If the first program in the customer PreInit table is an XPLINK program, then an XPLINK environment will be initialized.
- If the runtime options are passed as input and the XPLINK option is specified as XPLINK(ON), then an XPLINK environment will be initialized.
- If neither of the above are true (the first program in the customer PreInit table is a non-XPLINK program and the XPLINK runtime option is off or not specified), then a non-XPLINK environment will be initialized.

Note: The runtime options you specify will apply to all of the subroutines that are called by (call_sub) function. This includes options such as XPLINK. Therefore, all of your subroutines must have the same characteristics and requirements needed for these runtime options.

User exit invocation

User exits are invoked for initialization and termination during calls to CEEPIPI as shown in Table 67 on page 487.

Table 67. Invocation of user exits during process and enclave initialization and termination

Function	When invoked
Assembler user exit for first enclave initialization	• (*init_sub*) • (*init_sub_dp*) • (*call_main*) • (*call_sub*) or (*call_sub_addr*) or (*call_sub_addr*) ended with stop semantics (see "Stop semantics")
HLL user exit	• (*init_sub*) • (*init_sub_dp*) • (*call_main*) • (*call_sub*) or (*call_sub_addr*) or (*call_sub_addr*) ended with stop semantics
C `atexit()` functions	• (*call_main*) • (*call_sub*) or (*call_sub_addr*), which ended stop semantics. • (*term*) for environment created with (*init_sub*) or (*init_sub_dp*), if the last (*call_sub*) or (*call_sub_addr*) did not end with stop semantics
Assembler user exit for first enclave termination	• (*call_main*) • (*call_sub*) or (*call_sub_addr*), which ended stop semantics • (*term*) for environment created with (*init_sub*) or (*init_sub_addr*) if the last (*call_sub*) or (*call_sub_addr*) did not end with stop semantics
Assembler user exit for process termination	• (*term*)

For main environments:

The CEEBXITA assembler user exit and CEEBINT HLL user exit that are used with the environment are taken from the main routine being called.

For sub environments:

The CEEBXITA assembler user exit and CEEBINT HLL user exit that are used with the environment are taken from the first entry in the PreInit table. Any occurrences of CEEBXITA or CEEBINT in any other PreInit table entries, or in load modules used for call_sub_addr-type calls, are ignored.

See Chapter 28, "Using runtime user exits," on page 421 for more information about user exits.

Stop semantics

When one of the following is issued within the preinitialized environment for subroutines:

- C `exit()`, `abort()`, or signal handling function specifying a normal or abnormal termination
- COBOL STOP RUN statement
- PL/I STOP or EXIT

or when an unhandled condition causes termination of the (only) thread, the logical enclave is terminated. The process level of the environment is retained. Language Environment does *not* delete those entries that were loaded explicitly by Language Environment during the preinitialization processing.

Attention: If the first entry in the PreInit table is either different or deleted from when the enclave was last initialized, the assembler user exit (CEEBXITA), HLL user exit (CEEBINT), or programmer default runtime options (CEEUOPT) used during either an enclave reinitialization or enclave termination will either be different or not available. This will result in unpredictable results. Therefore, when using PreInit subroutine environments and in order to keep consistent enclave initialization and termination behavior, users need to ensure the first valid entry in the PreInit table does not change, especially when it contains the aforementioned external references.

Preinitialization interface

The following section describes how to invoke the PreInit interface, CEEPIPI, to perform the following tasks:

- Initialization
- Application invocation
- Termination
- Addition of an entry to the PreInit table
- Deletion of a main entry from the PreInit table
- Identification of an entry in the PreInit table
- Access to the CAA user word

The PreInit services offered under Language Environment using CEEPIPI are listed in Table 68.

Table 68. Preinitialization services accessed using CEEPIPI

Function code	Integer value	Service performed
Initialization		
init_main	1	Create and initialize an environment for multiple executions of main routines.
init_main_dp	19	Create and initialize an environment for multiple executions of main routines.
init_sub	3	Create and initialize an environment for multiple executions of subroutines.
init_sub_dp	9	Create and initialize an environment for multiple executions of subroutines.
Application invocation		
call_main	2	Invoke a main routine within an already initialized environment.
call_sub	4	Invoke a subroutine within an already initialized environment.
start_seq	7	Start a sequence of uninterruptable calls to a number of subroutines.
call_sub_addr	10	Invoke a subroutine by address within an already initialized environment.
Termination		

Table 68. Preinitialization services accessed using CEEPIPI (continued)

Function code	Integer value	Service performed
term	5	Explicitly terminate the environment without executing a user routine.
end_seq	8	Terminate a sequence of uninterruptable calls to a number of subroutines.
Addition of an entry to PreInit table		
add_entry	6	Dynamically add a candidate routine to execute within the preinitialized environment.
Deletion of an entry from PreInit table		
delete_entry	11	Delete an entry from the PreInit table, making it available for subsequent *add_entry* functions.
Identification of a PreInit table entry		
identify_entry	13	Identify the programming language of an entry in the PreInit table.
identify_attributes	16	Identify the attributes of an entry in the PreInit table.
Identification of the environment		
identify_environment	15	Identify the environment that was preinitialized.
Access to the CAA user word		
set_user_word	17	Set value to be used to initialize CAA user word.
get_user_word	18	Get value to be used to initialize CAA user word.

Initialization

Language Environment supports four forms of preinitialized environments. The first supports the execution of main routines. The second is a special form of the first, that allows multiple preinitialized environments, for executing main routines. to be created within the same address space. The third supports the execution of subroutines. The fourth is a special form of the third, that allows multiple preinitialized environments, for executing subroutines, to be created within the same address-space.

The primary difference between these environments is the amount of Language Environment initialization (and termination) that occurs on each application invocation call. With an environment that supports main routines, most of the application's execution environment is reinitialized with each invocation. With an environment that supports subroutines, very little of the execution environment is reinitialized with each invocation. This difference has its advantages and disadvantages.

For the **main environment**, the advantages are:

- A new, pristine environment is created.
- Runtime options can be specified for each application.

and the disadvantages are:

- Poorer performance.

For the **subenvironment**, the advantages are:

- Best performance.

and the disadvantages are:

- The environment is left in what ever state the previous application left it in.
- Runtime options cannot be changed.

(init_main) — initialize for main routines

The invocation of this routine:

- Creates and initializes a new common run-time environment (process) that allows the execution of main routines multiple times
- Sets the environment to dormant so that exceptions are percolated out of it
- Returns a token identifying the environment to the caller
- Returns a code in register 15 indicating whether an environment was successfully initialized

Syntax

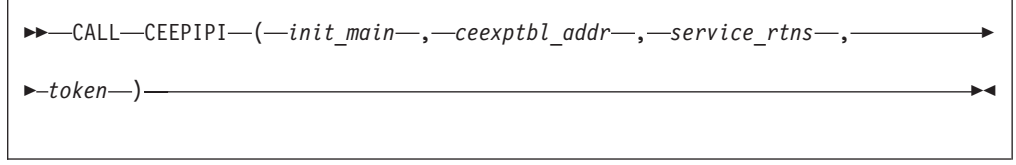

init_main **(input)**
A fullword function code (integer value = 1) containing the init_main request.

ceexptbl_addr **(input)**
A fullword containing the address of the PreInit table to be used during initialization of the new environment. Language Environment does not alter the user-supplied copy of the table. If an entry address is zero and the entry name is non-blank, Language Environment searches for the routine (in the LPA, saved segment, or nucleus) and dynamically loads it. Language Environment places the entry address in the corresponding slot of a Language Environment-maintained table.

Language Environment uses the high-order bit of the entry address to determine what AMODE to use when calling the routine. If the entry address is zero, and the entry name is supplied, Language Environment uses the AMODE returned by the system loader. If the entry address is supplied, you must provide the AMODE in the high-order bit of the address.

service_rtns **(input)**
A fullword containing the address of the service routine vector or 0, if there is no service routine vector. See “Service routines” on page 514 for more information.

token **(output)**
A fullword containing a unique value used to represent the environment. The *token* should be used only as input to additional calls to CEEPIPI, and should not be altered or used in any other manner.

Return codes: Register 15 contains a return code indicating if an environment was successfully initialized. Possible return codes (in decimal) are:

0 A new environment was successfully initialized.

4 The function code is not valid.

8 All addresses in the table were not resolved. This can occur if a LOAD

failure was encountered or a routine within the table was generated by a non-Language Environment-conforming HLL.

12 Storage for the preinitialization environment could not be obtained.

16 CEEPIPI was called from an active environment.

32 An unhandled error condition was encountered. This error is a result of a program interrupt or other abend that occurred that prevented the preinitialization services from completing.

Usage notes:

- The assembler user exit (CEEBXITA), HLL user exit (CEEBINT), and programmer defaults (CEEUOPT) that are used to initialize the environment are taken from the main routine being called through call_main.
- If a program in the PreInit table failed to load (return code 8), the *identify_attributes* CEEPIPI function can be used to help determine what table entry address did not resolve.

XPLINK considerations:

- If the environment being initialized is to be an XPLINK environment then the first program in the PreInit table must be an XPLINK module.
- If there is no entry in the PreInit table or if the first module is a non-XPLINK program, a non-XPLINK environment will be initialized.
- It is possible to change the environment from a non-XPLINK to an XPLINK environment when doing a call_main. For more details, see call_main.

(init_main_dp) — initialize for main routines (multiple environment)

The invocation of this routine:

- Creates and initializes a new common run-time environment (process) that allows the execution of main routines multiple times.
- Sets the environment dormant so that exceptions are percolated out of it.
- Returns a token identifying the environment to the caller.
- Returns a code in register 15 indicating whether an environment was successfully initialized.
- Ensures that the environment tolerates the existence of multiple Language Environment processes or enclaves.

Note: Multiple main environments can be established by using (init_main_dp), as opposed to using (init_main), which can establish only a single environment.

Syntax

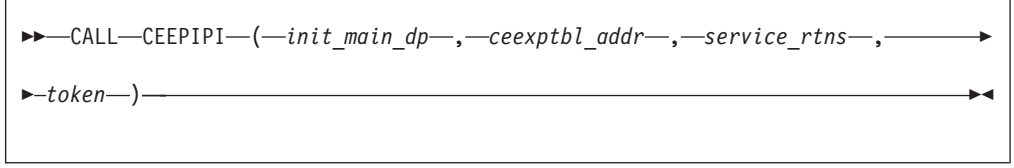

init_main_dp **(input)**
A fullword function code (integer value = 19) containing the (init_main_dp) request.

ceexptbl_addr **(input)**
A fullword containing the address of the PreInit table to be used during initialization of the new environment. A user-supplied copy of the table is not altered. If an entry address is zero and the entry name is non-blank, a search is performed for the routine (in the LPA, saved segment, or nucleus) and the routine is dynamically loaded. An entry is placed in the corresponding slot of a Language Environment-maintained table.

The high-order bit of the entry address determines what AMODE to use when calling the routine. If the entry address is zero, and the entry name is supplied, the AMODE returned by the system loader is used. If the entry address is supplied, you must provide the AMODE in the high-order bit of the address.

service_rtns **(input)**
A fullword containing the address of the service routine vector or 0, if there is no service routine vector. See "Service routines" on page 514 for more information.

token **(output)**
A fullword containing a unique value used to represent the environment. The *token* should be used only as input to additional calls to CEEPIPI, and should not be altered or used in any other manner.

Return codes: Register 15 contains a return code indicating if an environment was successfully initialized. Possible return codes (in decimal) are:

0 A new environment was successfully initialized.

4 The function code is not valid.

8 All addresses in the table were not resolved. This can occur if a LOAD failure was encountered or a routine within the table was generated by a non-Language Environment-conforming HLL.

12 Storage for the preinitialization environment could not be obtained.

16 CEEPIPI was called from an active environment other than a CEEPIPI main_dp environment.

32 An unhandled error condition was encountered. This error is a result of a program interrupt or other abend that occurred that prevented the preinitialization services from completing.

Usage notes:

- The assembler user exit (CEEBXITA), HLL user exit (CEEBINT), and programmer defaults (CEEUOPT) that are used to initialize the environment are taken from the main routine being called through (call_main).
- If a program in the PreInit table failed to load (return code 8), the (identify_attributes) CEEPIPI function can be used to help determine what table entry address did not resolve.
- If the process ID needs to be the same for all programs called by (call_main), the preinitialization driver program should pre-dub the task (TCB) before performing (init_main_dp).
- MSGFILE output can be directed to either a spool or to a unique file.
- Language Environment resources are not shared across multiple environments.
- C memory files are not shared across multiple environments.
- Calling POSIX(ON) programs in an (init_main_dp) environment is not supported.

XPLINK considerations:

- If the environment being initialized is to be an XPLINK environment then the first program in the PreInit table must be an XPLINK module.
- If there is no entry in the PreInit table or if the first module is a non-XPLINK program, a non-XPLINK environment will be initialized.
- It is possible to change the environment from a non-XPLINK to an XPLINK environment when using (call_main). For more information, see "(call_main) — invocation for main routine" on page 498.

Nested main_dp environment considerations:

- Main_dp environments can be initialized by calling CEEPIPI(init_main_dp) from an active main_dp environment. From an active main_dp environment, nested calls to CEEPIPI can be made with a token returned from (init_main_dp) to perform certain other functions:
  - (call_main)
  - (add_entry)
  - (delete_entry)
  - (term)
  - (set_user_word)
  - (get_user_word)
  - (identify_entry)
  - (identify_environment)
  - (identify_attributes)
- Restrictions for nested main_dp environments:
  - When the calling environment has a user-provided @EXCEPRTN, the nested main_dp environment must also have a user-provided @EXCEPRTN.
  - If the user-written preinitialization driver program has established a SPIE or ESPIE routine, the nested main_dp environment must have a user-provided @EXCEPRTN.
  - All CEEPIPI calls that use a token must be made from the same TCB.
  - The INTERRUPT(ON) runtime option is not supported when using nested main_dp environments under TSO/E.
  - When the TRAP runtime option is used with nested main_dp environments, use of the TSO/E attention key is not supported.
  - If an ABEND (40XX, for example) causes the immediate ending of a nested main_dp environment without orderly Language Environment termination, the user-provided preinitialization driver program cannot be returned to. The calling main_dp environment will also end without orderly Language Environment termination
  - If the ABTERMENC(ABEND) runtime option is in effect and an unhandled condition causes a nested main_dp environment to ABEND, Language Environment will not return to the preinitialization assembler driver program. The calling main_dp environment will also ABEND without orderly Language Environment termination. Consider using ABTERMENC(RETCODE) in nested main_dp environments
  - If a main_dp environment which uses the TRAP(ON,SPIE) runtime option does (call_main) to a nested main_dp environment which uses TRAP(ON,NOSPIE), language environment issues an ESPIE macro to prevent program checks from being passed to any existing ESPIE routine. If this ESPIE call must be avoided, do not call a nested main_dp environment with TRAP(ON,NOSPIE) from a main_dp environment that uses TRAP(ON,SPIE).

(init_sub) — initialize for subroutines

The invocation of this routine:

- Creates and initializes a new common run-time environment (process and enclave) that allows the execution of subroutines multiple times
- Sets the environment dormant so that exceptions are percolated out of it
- Returns a token identifying the environment to the caller
- Returns a code in register 15 indicating whether an environment was successfully initialized
- Ensures that when the environment is dormant, it is immune to other Language Environment enclaves that are created or terminated

Syntax

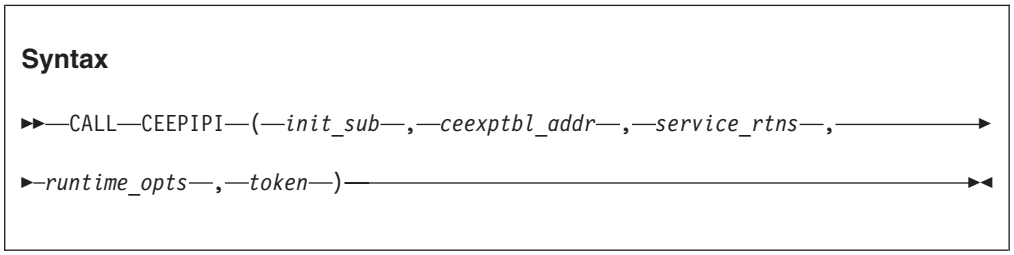

init_sub **(input)**
A fullword function code (integer value = 3) containing the init_sub request.

ceexptbl_addr **(input)**
A fullword containing the address of the PreInit table to be used during initialization of the new environment. Language Environment does not alter the user-supplied copy of the table. If an entry address is zero and the entry name is non-blank, Language Environment searches for the routine (in the LPA, saved segment, or nucleus) and dynamically loads it. Language Environment then places the entry address in the corresponding slot of a Language Environment-maintained table.

Language Environment uses the high-order bit of the entry address to determine what AMODE to use when calling the routine. If the entry address is zero, and the entry name is supplied, Language Environment uses the AMODE returned by the system loader. If the entry address is supplied, you must provide the AMODE in the high-order bit of the address.

service_rtns **(input)**
A fullword containing the address of the service routine vector. It contains 0 if there is no service routine vector. See “Service routines” on page 514 for more information.

runtime_opts **(input)**
A fixed-length 255-character string containing runtime options (see *z/OS Language Environment Programming Reference* for a list of runtime options that you can specify).

Note:

1. The runtime options you specify will apply to all of the subroutines that are called by the (call_sub) function. This includes options such as POSIX. Therefore, all of your subroutines must have the same characteristics and requirements needed for these runtime options.
2. If the Language Environment being initialized is a non-XPLINK environment, then all of your subroutines must be non-XPLINK subroutines.

token **(output)**
A fullword containing a unique value used to represent the environment. The *token* should be used only as input to additional calls to CEEPIPI, and should not be altered or used in any other manner.

Return codes: Register 15 contains a return code indicating if an environment was successfully initialized. Possible return codes (in decimal) are:

0 A new environment was successfully initialized.
4 The function code is not valid.
8 All addresses in the table were not resolved. This can occur if a LOAD failure was encountered, a routine within the table was not generated by a Language Environment-conforming HLL, or a C or PL/I routine within the table was not fetchable.
12 Storage for the preinitialization environment could not be obtained.
16 CEEPIPI was called from an active environment.
32 An unhandled error condition was encountered. This error is a result of a program interrupt or other abend that occurred that prevented the preinitialization services from completing.
40 An entry in the PreInit table is an XPLINK subroutine and the environment is a non-XPLINK sub environment. This entry is not valid.

Usage notes:

- The assembler user exit (CEEBXITA), HLL user exit (CEEBINT), and programmer defaults (CEEUOPT) that are used to initialize the environment are taken from the first valid entry in the PreInit table. Any occurrences of CEEBXITA, CEEBINT, and CEEUOPT in other PreInit table entries are ignored. Unpredictable results will occur if this first entry is deleted or changed.
- If a program in the PreInit table failed to load (return code 8 or 40), the *identify_attributes* CEEPIPI function can be used to help determine what table entry address did not resolve.

XPLINK considerations:

- If the first program in the customer PreInit table is an XPLINK program, then an XPLINK environment will be initialized.
- If the runtime options are passed as input and the XPLINK option is specified as XPLINK(ON), then an XPLINK environment will be initialized.
- If neither of the above are true (the first program in the customer PreInit table is a non-XPLINK program and the XPLINK runtime option is off or not specified), then a non-XPLINK environment will be initialized.

Note:

1. The runtime options you specify will apply to all of the subroutines that are called by (call_sub) function. This includes options such as XPLINK. Therefore, all of your subroutines must have the same characteristics and requirements needed for these runtime options.
2. If this is a non-XPLINK sub environment, then do not allow an XPLINK subroutine to be added to the table.

(init_sub_dp) — initialize for subroutine (multiple environment)

The invocation of this routine:

- Creates and initializes a new Language Environment process and enclave to allow the execution of subroutines multiple times
- Sets the environment dormant so that exceptions are percolated out of it
- Returns a token identifying the environment to the caller

- Returns a code in register 15 indicating whether an environment was successfully initialized
- Ensures that the environment tolerates the existence of multiple Language Environment enclaves
- Ensures that when the environment is dormant, it is immune to other Language Environment enclaves that are created or terminated

Multiple environments can be established only by using (init_sub_dp) as opposed to (init_sub), which can establish only a single environment.

Syntax

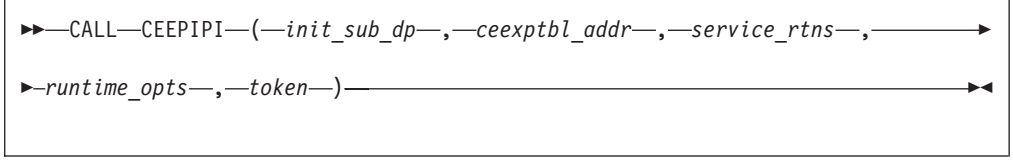

init_sub_dp **(input)**
A fullword function code (integer value = 9) containing the *init_sub_dp* request.

ceexptbl_addr **(input)**
A fullword containing the address of the PreInit table to be used during initialization of the new environment. Language Environment does not alter the user-supplied copy of the table. If an entry address is zero and the entry name is non-blank, Language Environment searches for the routine (in the LPA, saved segment, or nucleus) and dynamically loads it. Language Environment then places the entry address in the corresponding slot of a Language Environment-maintained table.

Language Environment uses the high-order bit of the entry address to determine what AMODE to use when calling the routine. If the entry address is zero, and the entry name is supplied, Language Environment uses the AMODE returned by the system loader. If the entry address is supplied, you must provide the AMODE in the high-order bit of the address.

service_rtns **(input)**
A fullword containing the address of the service routine vector. It contains 0 if there is no service routine vector. See “Service routines” on page 514 for more information.

runtime_opts **(input)**
A fixed-length 255-character string containing runtime options (see *z/OS Language Environment Programming Reference*for a list of runtime options that you can specify).

Note:

1. The runtime options you specify will apply to all of the subroutines that are called by the (call_sub) function. This includes options, such as POSIX. Therefore, all of your subroutines must have the same characteristics and requirements needed for these runtime options.
2. If you want to run XPLINK routines in a PreInit sub environment, you must specify the XPLINK(ON) runtime option field when you create the sub environment by calling CEEPIPI(init_sub). You can not run XPLINK routines in a sub environment when runtime option XPLINK(OFF) is in effect.

token **(output)**
A fullword containing a unique value used to represent the environment. The *token* should be used only as input to additional calls to CEEPIPI, and should not be altered or used in any other manner.

Return codes: Register 15 contains a return code indicating if an environment was successfully initialized. Possible return codes (in decimal) are:

0 A new environment was successfully initialized.
4 The function code is not valid.
8 All addresses in the table were not resolved. This can occur if a LOAD failure was encountered or a routine within the table was not generated by a Language Environment-conforming HLL.
12 Storage for the preinitialization environment could not be obtained.
32 An unhandled error condition was encountered. This error is a result of a program interrupt or other abend that occurred that prevented the preinitialization services from completing.
40 An entry in the PreInit table is an XPLINK subroutine and the environment is a non-XPLINK sub environment. This entry is not valid.

Usage notes:

- The assembler user exit (CEEBXITA), HLL user exit (CEEBINT), and programmer defaults (CEEUOPT) that are used to initialize the environment are taken from the first valid entry in the PreInit table. Any occurrences of CEEBXITA, CEEBINT, and CEEUOPT in other PreInit table entries are ignored. Unpredictable results will occur if this first entry is deleted or changed.
- COBOL, PL/I, and C routines must be compiled RENT to participate in this environment
- You can direct MSGFILE output to either a spool or to a unique file.
- C memory files are not shared across multiple environments.
- If the (init_sub_dp,...) interface is used to create additional environments, neither the existing environment, nor the one trying to be created can be POSIX(ON).
- If a program in the PreInit table failed to load (return code 8 or 40), the *identify_attributes* CEEPIPI function can be used to help determine what table entry address did not resolve.

XPLINK considerations:

- If the first program in the customer PreInit table is an XPLINK program, then an XPLINK environment will be initialized.
- If the runtime options are passed as input and the XPLINK option is specified as XPLINK(ON), then an XPLINK environment will be initialized.
- If neither of the above are true (the first program in the customer PreInit table is a non-XPLINK program and the XPLINK runtime option is off or not specified), then a non-XPLINK environment will be initialized.

Note: The runtime options you specify apply to all of the subroutines that are called by (call_sub_dp) function. This includes options such as XPLINK. Therefore, all of your subroutines must have the same characteristics and requirements needed for these runtime options.

Application invocation

Language Environment provides facilities to invoke either a main routine or subroutine. When invoking main routines, the environment must have been

initialized using the init_main or init_main_dp function code. Similarly, when invoking subroutines, the environment must have been initialized with the init_sub or init_sub_dp function codes.

(call_main) — invocation for main routine

This invocation of CEEPIPI invokes as a main routine the routine that you specify. The common execution environment identified by *token* is activated before the called routine is invoked, and after the called routine returns, the environment is dormant.

At termination, the currently active HLL event handlers are driven to enforce language semantics for the termination of an application such as closing files and freeing storage. The process level is made dormant rather than terminated. The thread and enclave levels are terminated. The assembler user exit is driven with the function code for first enclave termination. (For more information about user exits, see Chapter 28, "Using runtime user exits," on page 421.)

Syntax

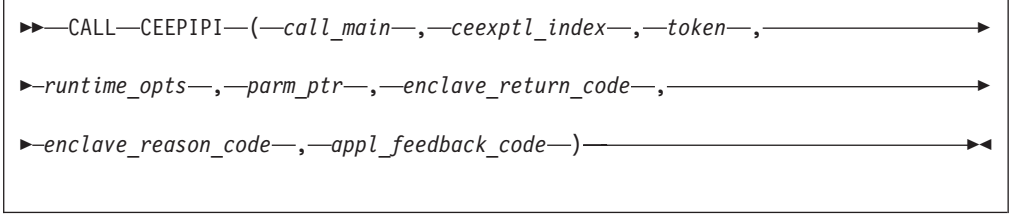

call_main **(input)**
A fullword function code (integer value = 2) containing the call_main request.

ceexptbl_index **(input)**
A fullword containing the row number within the PreInit table of the entry that should be invoked. The index starts at 0.

Each invocation of the CEEXPITY macro generates a row in the PreInit table. The first entry is row 0, the second is row 1 and so on. A call to (add_entry) to add an entry to the PreInit table also returns a row number in the *ceexptbl_index* parameter.

token **(input)**
A fullword with the value of the token returned by (init_main) or (init_main_dp) when the common run-time environment is initialized. The *token* must identify a previously preinitialized environment that is not active at the time of the call.

runtime_opts **(input)**
A fixed-length 255-character string containing runtime options. (See *z/OS Language Environment Programming Reference* for a list of runtime options that you can specify.)

parm_ptr **(input)**
A fullword parameter list pointer or 0 (zero) that is placed in register 1 when the main routine is executed. The parameter list that is passed must be in a format that HLL subroutines expect (for example, in an `argc, argv` format for C routines).

enclave_return_code **(output)**
A fullword containing the enclave return code returned by the called routine

when it finished executing. For more information about return codes, see "Managing return codes in Language Environment" on page 153.

enclave_reason_code **(output)**
A fullword containing the enclave reason code returned by the environment when the routine finished executing. For more information about reason codes, see "Managing return codes in Language Environment" on page 153.

appl_feedback_code **(output)**
A 96-bit condition token indicating why the application terminated.

Return codes: Register 15 contains a return code indicating the success or failure of the request. Possible return codes (in decimal) are:

0 The environment was activated and the routine called.
4 The function code is not valid.
8 If *token* was initialized by (init_main) or (init_sub), CEEPIPI(call_main) was called from a Language Environment-conforming HLL.

If *token* was initialized by (init_main_dp), CEEPIPI(call_main) was called from a Language Environment-conforming HLL that is not running in a (main_dp) environment, or token is already in use for another call to CEEPIPI.
12 The indicated environment was initialized for subroutines. No routine was executed.
16 The *token* is not valid.
20 The index points to an entry that is not valid or empty.
24 The index that was passed is outside the range of the table.
32 An unhandled error condition was encountered. This error is a result of a program interrupt or other abend that occurred that prevented the preinitialization services from completing.

The user return code and Language Environment return code modifier are set to zero before invoking the target routine.

Usage notes:

- The NOEXECOPS and CBLOPTS runtime options (see *z/OS Language Environment Programming Reference*) are ignored since the parameter inbound to the application and the runtime options are separated already. Therefore, NOEXECOPS and CBLOPTS do not affect the parameter string format. See "C PLIST and EXECOPS Interactions" on page 565 for more information.
- The assembler user exit (CEEBXITA), HLL user exit (CEEBINT), and programmer defaults (CEEUOPT) that are used to initialize the environment are taken from the main routine being called. Any occurrences of CEEBXITA, CEEBINT, and CEEUOPT in other PreInit table entries are ignored.
- For more information about return codes, see "Managing return codes in Language Environment" on page 153.

(call_sub) — invocation for subroutines

This invocation of CEEPIPI invokes as a subroutine the routine that you specify. The common run-time environment identified by *token* is activated before the called routine is invoked, and after the called routine returns, the environment is dormant.

The enclave is terminated when an unhandled condition is encountered or a STOP statement is executed. (See "Stop semantics" on page 487 for more information.)

However, the process level is maintained. The next call to (call_sub) initializes a new enclave.

Syntax

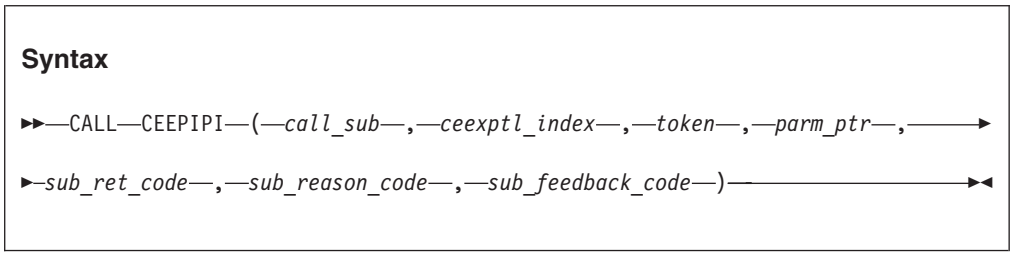

call_sub **(input)**
A fullword function code (integer value = 4) containing the call_sub request for a subroutine.

ceexptbl_index **(input)**
A fullword containing the row number of the entry within the PreInit table that should be invoked; the index starts at 0.

Note: If the token pointing to the previously preinitialized environment is a non-XPLINK environment and the subprogram to be invoked is XPLINK, then a Return Code of 40 will be returned because this is not valid.

token **(input)**
A fullword with the value of the token returned when the common run-time environment is initialized. This token is initialized by the (init_sub) or (init_sub_dp). The *token* must identify a previously preinitialized environment that is not active at the time of the call. You must not alter the value of the token.

Note: If the token pointing to the previously preinitialized environment is a non-XPLINK environment and the subprogram to be invoked is XPLINK a Return Code of 40 will be returned because this is not valid.

parm_ptr **(input)**
A parameter list pointer or 0 (zero) that is placed in register 1 when the routine is executed.

C and C++ users need to follow the subroutine linkage convention for C/C++ — assembler ILC applications, as described in *z/OS XL C/C++ Programming Guide*.

sub_ret_code **(output)**
The subroutine return code. If the enclave is terminated due to an unhandled condition, a STOP statement, or EXIT statement (or an exit() function), this contains the enclave return code for termination.

sub_reason_code **(output)**
The subroutine reason code. This is 0 for normal subroutine returns. If the enclave is terminated due to an unhandled condition, a STOP statement, or EXIT statement (or an exit() function), this contains the enclave reason code for termination.

sub_feedback_code **(output)**
The feedback code for enclave termination. This is the CEE000 feedback code for normal subroutine returns. If the enclave is terminated due to an unhandled condition, a STOP statement, or EXIT statement (or an exit() function), this contains the enclave feedback code for termination.

Return codes: Register 15 contains a return code indicating the success or failure of the request. Possible return codes (in decimal) are:

0 The environment was activated and the routine called.

4 The function code is not valid.

8 CEEPIPI was called from a Language Environment-conforming HLL.

12 The indicated environment was initialized for main routines. No routine was executed.

16 The *token* is not valid.

20 The index points to an entry that is not valid or empty.

24 The index passed is outside the range of the table.

28 The enclave was terminated but the process level persists.

This value indicates the enclave was terminated while the process was retained. This can occur due to a STOP statement being issued or due to an unhandled condition. The *sub_ret_code*, *sub_reason_code*, and *sub_feedback_code* indicate this action.

40 The subprogram was an XPLINK program and the preinitialized environment is non-XPLINK. This is not valid.

Usage notes:

- The enclave terminates if the subroutine issues a STOP statement, EXIT statement (or an exit() function), or if there is an unhandled condition. However, the process level is not terminated. When the enclave level is terminated, any subsequent invocation creates a new enclave by using the same runtime options used in the creation of the first enclave. Language Environment does not delete any user routines that were loaded into the PreInit table.

  However, if, the first valid entry in the PreInit table is different than when the enclave was last initialized, the assembler user exit (CEEBXITA), HLL user exit (CEEBINT), and/or programmer default runtime options (CEEUOPT) used during the enclave re-initialization might be different. PreInit subroutine initialization uses these external references only when associated with the first valid entry in the PreInit table. Therefore, when using PreInit subroutine environments and you want consistent enclave initialization behavior across the stop semantics, you need to ensure the first valid entry in the PreInit table does not change, especially when it contains the aforementioned external references.(See “Stop semantics” on page 487.)
- Any subroutine that modifies external data cannot make assumptions about the initial state of that external data. The initial state of the external data is influenced by previous instances of the same subroutine and also by previous instances of any subroutine that caused enclave termination.
- If the first entry in the PreInit table contained a CEEBXITA, CEEBINIT or CEEUOPT when the environment was initialized and is then deleted or changed, the results of subsequent enclave re-initialization or termination is unpredictable. It is the responsibility of the user to ensure the first entry in the PreInit table does not change, especially when it contains the aforementioned external references.

(call_sub_addr) — invocation for subroutines by address

This invocation of CEEPIPI invokes a specified routine as a subroutine. The common run-time environment identified by *token* is activated before the called routine is invoked; after the called routine returns, the environment is dormant.

The enclave is terminated when an unhandled condition is encountered or a STOP or EXIT statement (or an exit() function) is executed. (See "Stop semantics" on page 487 for more information.) However, the process level is maintained; only the enclave level terminates.

Syntax

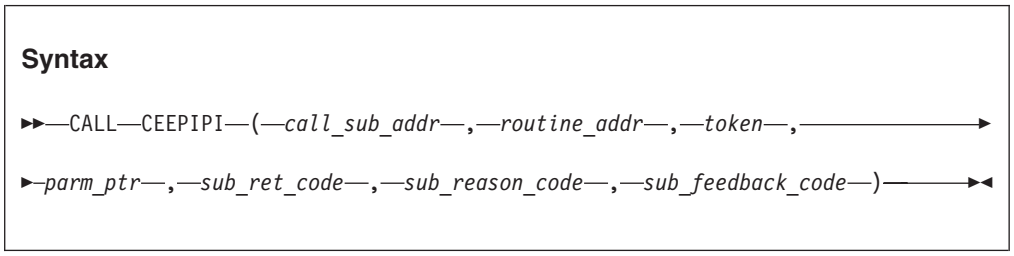

call_sub_addr **(input)**
A fullword function code (integer value = 10) containing the call_sub request for a subroutine.

routine_addr **(input/output)**
A doubleword containing the address of the routine that should be invoked. The first fullword contains the entry point address.

Note:

1. If this is an XPLINK environment and the second fullword is zero, Preinitialization services will create a new function pointer to call the routine directly. The new function pointer will be returned in the second fullword.
2. If this is an XPLINK environment and the second fullword is a function pointer, the XPLINK subroutine is called directly. This fast path avoids the overhead of translating the routine address to the function pointer.

token **(input)**
A fullword with the value of the token returned by (init_sub) or (init_sub_dp) when the common run-time environment is initialized. The *token* must identify a previously preinitialized environment that is not active at the time of the call. You must not alter the value of the token.

Note: If the token pointing to the previously preinitialized environment is a non-XPLINK environment and the subprogram to be invoked is XPLINK, then a return code of 40 will be returned because this is not valid.

parm_ptr **(input)**
A parameter list pointer or 0 (zero) that is placed in register 1 when the routine is executed.

C and C++ users are advised to follow the subroutine linkage convention for C/C++ — assembler ILC applications, as described in *z/OS XL C/C++ Programming Guide*.

sub_ret_code **(output)**
The subroutine return code. If the enclave is terminated due to an unhandled condition or a STOP or EXIT statement (or an exit() function), this contains the enclave return code for termination.

sub_reason_code **(output)**
The subroutine reason code. This is 0 for normal subroutine returns. If the

enclave is terminated due to an unhandled condition or a STOP or EXIT statement (or an exit() function), this contains the enclave reason code for termination.

sub_feedback_code **(output)**
The feedback code for enclave termination. This is the CEE000 feedback code for normal subroutine returns. If the enclave is terminated due to an unhandled condition or a STOP or EXIT statement (or an exit() function), this contains the enclave feedback code for termination.

Return codes: Register 15 contains a return code indicating the success or failure of the request. Possible return codes (in decimal) are:

0 The environment was activated and the routine called.

4 The function code is not valid.

8 CEEPIPI was called from a Language Environment-conforming HLL.

12 The indicated environment was initialized for main routines. No routine was executed.

16 The *token* is not valid.

28 The enclave was terminated but the process level persists.

This value indicates the enclave was terminated while the process was retained. This can occur due to a STOP or EXIT statement (or an exit() function) being issued or due to an unhandled condition. The *sub_ret_code*, *sub_reason_code*, and *sub_feedback_code* indicate this action.

40 The subprogram was an XPLINK program and the preinitialized environment is non-XPLINK. This is not valid.

41 Indicates the routine address could not be converted to a function descriptor.

Usage notes:

- The enclave terminates if the subroutine issues a STOP or EXIT statement (or an exit() function), or if there is an unhandled condition. However, the process level is not terminated. When the enclave level is terminated, any subsequent invocation creates a new enclave using the same runtime options used in the creation of the first enclave. Language Environment does not delete any user routines that were loaded into the PreInit table.

  However, if, the first valid entry in the PreInit table is different than when the enclave was last initialized, the assembler user exit (CEEBXITA), HLL user exit (CEEBINT), and/or programmer default runtime options (CEEUOPT) used during the enclave re-initialization might be different. PreInit subroutine initialization uses these external references only when associated with the first valid entry in the PreInit table. Therefore, when using PreInit subroutine environments and you want consistent enclave initialization behavior across the stop semantics, you need to ensure the first valid entry in the PreInit table does not change, especially when it contains the aforementioned external references.(See “Stop semantics” on page 487.)
- Any subroutine that modifies external data cannot make assumptions about the initial state of that external data. The initial state of the external data is influenced by previous instances of the same subroutine and also by previous instances of any subroutine that caused enclave termination.

- C subroutines that are not naturally reentrant and C++ subroutines can be invoked using call_sub_addr only in an XPLINK environment. In a non-XPLINK environment, they must be invoked using call_sub.
- If the first entry in the PreInit table contained a CEEBXITA, CEEBINIT or CEEUOPT when the environment was initialized and is then deleted or changed, the results of subsequent enclave re-initialization or termination is unpredictable. It is the responsibility of the user to ensure the first entry in the PreInit table does not change, especially when it contains the aforementioned external references.

(end_seq) — end a sequence of calls

This invocation of CEEPIPI declares that a sequence of uninterrupted calls to subroutines by this driver program has finished.

Syntax

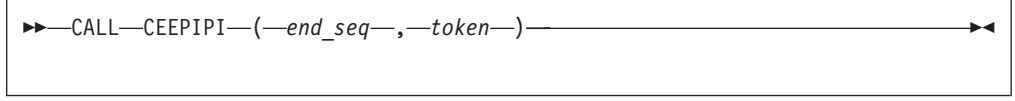

end_seq **(input)**
A fullword function code (integer value = 8) containing the end_seq request

token **(input)**
A fullword with the value of the token returned by (init_sub_dp) when the common runtime environment is initialized.

The *token* must identify a previously preinitialized environment that was prepared for multiple calls by the (start_seq) call.

Return codes: Register 15 contains a return code indicating the success or failure of the request. Possible return codes (in decimal) are:

0 The environment is no longer prepared for a sequence of calls.

4 The function code is not valid.

8 The indicated environment was already active; no action taken.

16 The *token* is not valid.

20 The *token* was not used in a start_seq call.

Usage notes:

- (end_seq) can be used only in conjunction with a Language Environment environment initialized by an (init_sub_dp) function code. A return code of 4 is set for environments initialized by other than (init_sub_dp).
- Only (call_sub) or (call_sub_addr) invocations are allowed between the (start_seq) and (end_seq) calls.
- The driver program cannot cancel any STAE or ESPIE routines.
- This function can be called from an active environment if the Preinitialization environment indicated by *token* was created with the (init_sub_dp) function.

(start_seq) — start a sequence of calls

This invocation of CEEPIPI declares that a sequence of uninterrupted calls is made to a number of subroutines by this driven program to the same preinitialized

environment. This minimizes the overhead between calls by performing as much activity as possible at the start of a sequence of calls.

Syntax

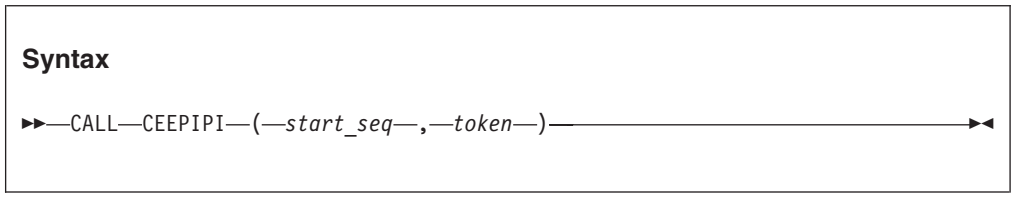

start_seq **(input)**
A fullword function code (integer value = 7) containing the start_seq request.

token **(input)**
A fullword with the value of the token returned by (init_sub_dp) when the common runtime environment is initialized.

The *token* must identify a previously preinitialized environment for subroutines that are dormant at the time of the call.

Return codes: Register 15 contains a return code indicating the success or failure of the request. Possible return codes (in decimal) are:

0 The environment was prepared for a sequence of calls.

4 The function code is not valid.

8 The indicated environment was already active; no action taken.

16 The *token* is not valid.

20 Sequence already started using *token*.

Usage notes:

- (start_seq) can be used only in conjunction with a Language Environment environment initialized by (init_sub_dp) function code. A return code 4 is set for environments not initialized by (init_sub_dp).
- (start_seq) minimizes the overhead between calls by allowing Language Environment to perform as much activity as possible at the start of the sequence of calls.
- Only (call_sub) or (call_sub_addr) invocations are allowed between the (start_seq) and (end_seq) calls.
- The same *token* must be passed for all invocations of (call_sub) or (call_sub_addr) between the (start_seq) and (end_seq) function codes. You can vary the routine invoked.
- During a CEEPIPI call sequence, the user's CEEPIPI driver must insure that the Language Environment recovery routines are never invoked when a program check or abend occurs in the user application code. One way to do this is to run with Trap (ON,NOSPIE), and also establish an ESTAE to handle errors when Language Environment is not active.

(term) — terminate environment

This invocation of CEEPIPI terminates the environment identified by the value given in *token*. This service is used for terminating environments created for subroutines or main routines.

Syntax

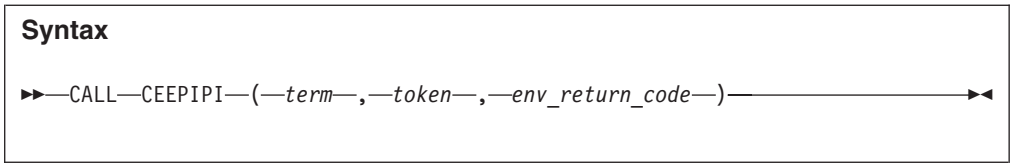

term **(input)**
A fullword function code (integer value = 5) containing the termination request.

token **(input)**
A fullword with the value of the token of the environment to be terminated. This token is returned by a (init_main), (init_main_dp), (init_sub), or (init_sub_dp) request during the initialization call.

The *token* must identify a previously preinitialized environment that is dormant at the time of the call.

env_return_code **(output)**
A fullword integer which is set to the return code from the environment termination.

If the environment was initialized for a main routine or a subroutine, and the last (call_sub) or (call_sub_addr) issued stop semantics, the value of *env_return_code* is zero.

If the environment was initialized for a subroutine and the last (call_sub) or (call_sub_addr) did not terminate with stop semantics, *env_return_code* contains the same value as that in *sub_ret_code* from the last (call_sub) or (call_sub_addr).

Return codes: Register 15 contains a return code indicating the success or failure of the request. Possible return codes (in decimal) are:

0 The environment was activated and termination was requested.

4 Non-valid function code.

8 If *token* was initialized by (init_main) or (init_sub), CEEPIPI(term) was called from a Language Environment-conforming routine.

If *token* was initialized by (init_main_dp), CEEPIPI(term) was called from a Language Environment-conforming routine that is not running in a (main_dp) environment, or *token* is already in use for another call to CEEPIPI

16 The *token* is not valid.

Usage notes:

- All resources obtained are released when the environment terminates.
- All routines loaded by Language Environment are deleted when the environment terminates.
- Subsequent references to *token* by preinitialization services result in an error indicating the token is not valid.

(add_entry) — add an entry to the PreInit table

This invocation of CEEPIPI adds an entry for the environment represented by *token* in the Language Environment-maintained table. If a routine entry address is not provided, the routine name is used to dynamically load the routine and add it to

the PreInit table. The PreInit table index for the new entry is returned to the calling routine.

Syntax

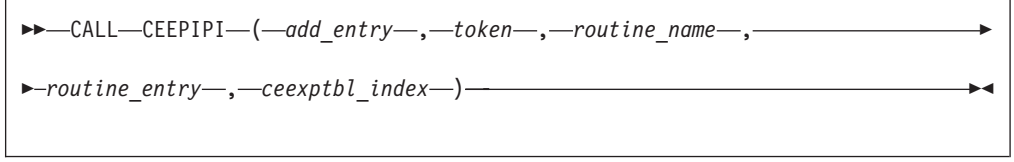

add_entry **(input)**
A fullword function code (integer value = 6) containing the add_entry request.

token **(input)**
A fullword with the value of the token associated with the environment that adds this new routine. This token is returned by a (init_main), (init_main_dp), (init_sub), or (init_sub_dp) request.

The *token* must identify a previously preinitialized environment that is dormant at the time of the call.

routine_name **(input)**
A character string of length 8, left-justified and padded right with blanks, containing the name of the routine. To indicate the absence of the name, this field should be blank. If *routine_entry* is zero, this is used as the load name.

routine_entry **(input/output)**
The routine entry address that is added to the PreInit table. If *routine_entry* is zero on input, *routine_name* is used as the load name. On output, *routine_entry* is set to the load address of *routine_name*.

The high-order bit of the entry_point address must be set to indicate the addressing mode for the routine. If the high-order bit is OFF, the routine is called in 24 bit addressing mode and the address must be a valid 24 bit address. If the high-order bit is ON, the routine is called in 31 bit addressing mode and the address must be a valid 31 bit address.

ceexptbl_index **(output)**
The index to the PreInit table where this routine was added. If the return code is nonzero, this value is indeterminate. The index starts at zero.

Note: The environment that was preinitialized can be an XPLINK environment or a non-XPLINK environment. If the routine being added is an XPLINK routine, then the previously initialized environment must also be XPLINK.

Return codes: Register 15 contains a return code indicating the success or failure of the request. Possible return codes (in decimal) are:

0 The routine was added to the PreInit table.

4 Non-valid function code.

8 If *token* was initialized by (init_main) or (init_sub), CEEPIPI(add_entry) was called from a Language Environment-conforming routine.

If *token* was initialized by (init_main_dp), CEEPIPI(add_entry) was called from a Language Environment-conforming routine that is not running in a (main_dp) environment, or *token* is already in use for another call to CEEPIPI

12 The routine did not contain a valid Language Environment entry prolog. Ensure that the routine was compiled with a current Language Environment enabled compiler. The PreInit table was not updated.

16 The *token* is not valid.

20 The *routine_name* contains only blanks and the *routine_entry* was zero. The PreInit table was not updated.

24 The *routine_name* was not found or there was a load failure; the PreInit table was not updated.

28 The PreInit table is full. No routine was added to the table, nor was any routine loaded by Language Environment.

32 An unhandled error condition was encountered. This error is a result of a program interrupt or other abend that occurred that prevented the preinitialization services from completing.

38 Non-valid entry: A non-XPLINK subenvironment was preinitialized and the program that was being added is an XPLINK program.

42 Non-valid entry: The *routine_entry* had the high-order bit off indicating this routine is a 24 bit addressing mode routine but the environment is an XPLINK 31-bit environment. This is not valid.

Usage notes:

- The PreInit table is built using the macros described in this topic. Therefore, its size is under the control of your application, not Language Environment.
- None of the routines in the PreInit table can be nested routines. All routines must be external routines.
- Language Environment uses the high-order bit of the entry address to determine what AMODE to use when calling the routine. If the *routine_entry* is zero, and the *routine_name* is supplied, Language Environment uses the AMODE returned by the system loader. If the *routine_entry* is supplied, you must provide the AMODE in the high-order bit of the address.
- An *add_entry* of an XPLINK program into a non-XPLINK preinitialized sub-environment will be not valid. If the environment is non-XPLINK, then the subprogram added with the *add_entry* function must also be non-XPLINK. However, you can do an *add_entry* of a main XPLINK program into a non-XPLINK environment. When a *call_main* is done with this scenario the environment will switch to XPLINK in order to allow the program to run.

(delete_entry) — delete an entry from the PreInit table

This function deletes an entry from the PreInit table. The entry is then available for subsequent (add_entry) functions.

Syntax

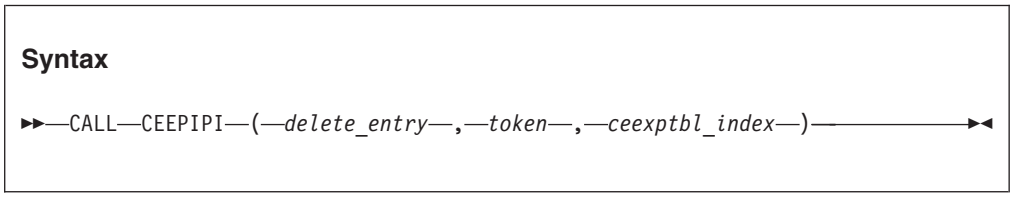

delete_entry **(input)**
fullword function code (integer value = 11) containing the delete_entry request

token **(input)**
a fullword with the value of the token of the environment. This is the token returned by a (init_main), (init_main_dp), (init_sub), or (init_sub_dp) request.

ceexptbl_index **(input)**
the index into the PreInit table of the entry to delete.

Return codes: Register 15 contains a return code indicating the success or failure of the request. Possible return codes (in decimal) are:

0 The routine was deleted from the PreInit table

4 The function code is not valid.

8 If *token* was initialized by (init_main) or (init_sub), CEEPIPI(delete_entry) was called from an active environment.

If *token* was initialized by (init_main_dp), CEEPIPI(add_entry) was called from an active environment other than a (main_dp) environment, or *token* is already in use for another call to CEEPIPI.

No entries were deleted from the PreInit table.

16 The *token* is not valid

20 The PreInit table entry indicated by *ceexptbl_index* was empty.

24 The index passed is outside the range of the table.

28 The system request to delete the routine failed; the routine was not deleted from the PreInit table.

Usage notes:

- The *token* must identify a previously preinitialized environment that is dormant at the time of the call.
- If the routine indicated by *ceexptbl_index* had been loaded by CEEPIPI, it will be deleted.
- (delete_entry) no longer issues return code 12 (the environment indicated by *token* was not created with a (init_main) request; the routine was not deleted from the PreInit table).

(identify_entry) — identify an entry in the PreInit table

This invocation of CEEPIPI identifies the language of the entry point for a routine in the PreInit table.

Syntax

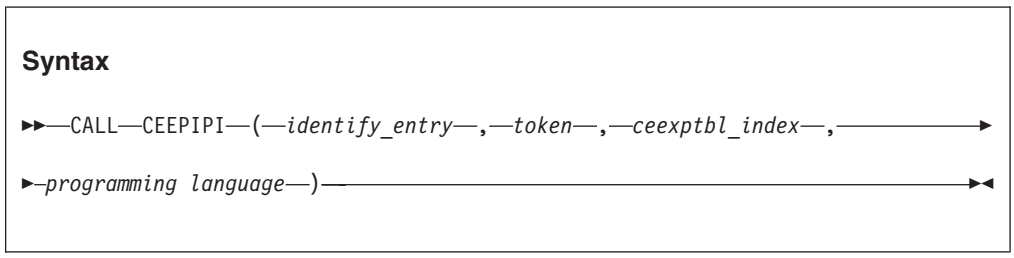

identify_entry **(input)**
A fullword containing the *identify_entry* function code (integer value=13).

token **(input)**
A fullword with the value of the token of the environment. This is the token returned by a (init_main), (init_main_dp), (init_sub) or (init_sub_dp) request.

ceexptbl_index **(input)**
A fullword containing the index in the PreInit table of the entry to identify the programming language.

programming language **(output)**
A fullword with one of the following possible values:

3	C/C++
5	COBOL
10	PL/I
11	Enterprise PL/I for z/OS
15	Language Environment-enabled assembler
16	PL/X

Return codes: Register 15 contains a return code indicating the success or failure of the request. Possible return codes (in decimal) are:

0	The programming language has been returned.
4	Non-valid function code.
8	CEEPIPI was called from an active environment.
16	The *token* is not valid.
20	The PreInit table entry indicated by *ceexptbl_index* was empty.
24	The index passed is outside the range of the table.

Usage notes:

- The *token* must identify a previously preinitialized environment that is dormant at the time of the call and was established with the (init_main), (init_main_dp), (init_sub) or (init_sub_dp) request.
- The *programming language* can be used by the driver to determine the format of the parameter list for the routine in cases where the language of the entry is not known.
- When a PreInit table entry contains multiple languages, *programming_language* is the language of the entry point for the entry.

(identify_environment) — identify the environment in the PreInit table

This invocation of CEEPIPI identifies the environment that was preinitialized.

Syntax

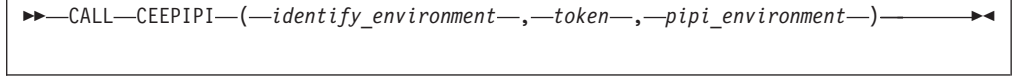

identify_environment **(input)**
A fullword containing the *identify_environment* function code (integer value=15).

token **(input)**
A fullword with the value of the token of the environment. This is the token returned by a (init_main), (init_main_dp), (init_sub) or (init_sub_dp) request.

pipi_environment **(output)**
A fullword (32 Bit) mask value will be returned. For information about the mask value, see Table 69 on page 511.

Table 69. pipi_environment mask values

pipi_environment	Mask value	Action
ceepipi_main	X'80000000'	PreInit main environment is initialized.
ceepipi_enclave_initialized	X'40000000'	PreInit enclave is initialized.
ceepipi_dp_environment	X'20000000'	PreInit sub dp environment is initialized.
ceepipi_dp_seq_of_calls_active	X'10000000'	PreInit seq call function is active.
ceepipi_dp_exits_established	X'08000000'	PreInit sub dp exits is set.
ceepipi_sir_unregistered	X'04000000'	PreInit sir is registered.
ceepipi_sub_environment	X'02000000'	PreInit sub environment is initialized.
ceepipi_XPLINK_environment	X'01000000'	PreInit XPLINK environment is initialized.
ceepipi_init_main_dp_environment	X'00200000'	PreInit main dp environment is initialized.

Note: Mask bits other than those listed in the table may be nonzero. The meaning of these bits is not defined.

Return codes: Register 15 contains a return code indicating the success or failure of the request. Possible return codes (in decimal) are:

0 The Preinitialization environment mask has been returned.
4 Non-valid function code.
8 CEEPIPI was called from an active environment.
16 The *token* is not valid.

(identify_attributes) — identify the program attributes in the PreInit table

This invocation of CEEPIPI identifies the program attributes of a program in the PreInit table.

Syntax

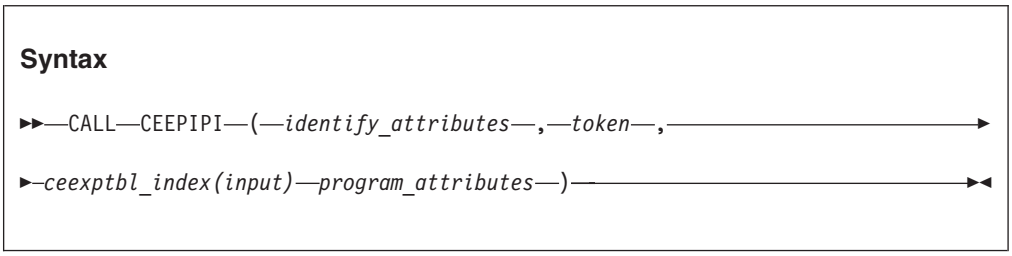

identify_attributes **(input)**
A fullword containing the *identify_attributes* function code (integer value=16).

token **(input)**
A fullword with the value of the token of the environment. This is the token returned by a (init_main), (init_main_dp), (init_sub) or (init_sub_dp) request.

ceexptbl_index **(input)**
A fullword containing the index in the PreInit table of the entry to identify the programming attributes.

program_attributes **(output)**
A fullword (32–bit) mask value will be returned indicating the following:

Table 70. program_attributes mask values

program_attribute	Mask value	Action
loaded_by_pipi	X'80000000'	The Preinitialization entry was loaded by Language Environment
XPLINK_program	X'40000000'	The Preinitialization entry loaded is an XPLINK program
Address_not_resolved	X'20000000'	The Preinitialization entry could not be loaded

Return codes: Register 15 contains a return code indicating the success or failure of the request. Possible return codes (in decimal) are:

0 The Preinitialization environment mask has been returned.
4 Non-valid function code.
8 CEEPIPI was called from an active environment.
16 The *token* is not valid.
20 The PreInit table entry indicated by ceexptbl_index was empty.
24 The index passed is outside the range of the table.

(set_user_word) -- set value to be used to initialize CAA user word

Syntax

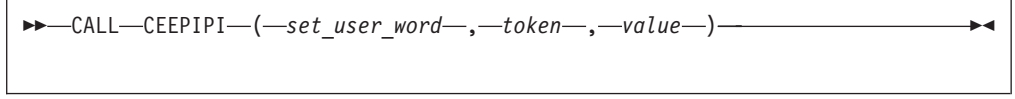

set_user_word **(input)**
A fullword containing the set_user_word function code (integer value = 17).

token **(input)**
A fullword with the value of the token of the environment. This is the token returned by a (init_main), (init_main_dp), (init_sub) or (init_sub_dp) request.

value **(input)**
A fullword value that will be used to initialize the user word in the initial thread CAA when the application is invoked using the (call_main), (call_sub), (call_sub_addr), (call_sub_addr_nochk), or (call_sub_addr_nochk2) functions for the passed-in environment token.

Return codes: Register 15 contains a return code indicating the success or failure of the request. Possible return codes (in decimal) are::

0 The User Word has been set.
4 Non-valid function code.
16 The *token* is not valid.

Usage notes:

- This value is saved in an area associated with the passed-in environment token. It is copied into the CAA for the initial thread when the next (call_main), (call_sub), (call_sub_addr), (call_sub_addr_nochk), or (call_sub_addr_nochk2) function is done to start an application. The application can then examine or update this user word in the CAA (CEECAA_USER_WORD). When the application ends, the final value in CEECAA_USER_WORD is not copied back into the area associated with the environment token. When the next application

is started using a function such as (call_main), (call_sub), or(call_sub_addr), the user word value last established by (set_user_word) is used again.

- The user word associated with the environment token is initialized to 0 when (init_main), (init_main_dp), (init_sub), or (init_sub_dp) is done. The CAA for the initial process thread is initialized with 0 if no (set_user_word) function call has been done before the application is started.
- The user word in all CAAs other than the initial thread CAA is set to 0. The user word in all CAAs in nested enclaves is set to 0.
- When fork() is done, the user word in the CAA for the new process inherits the value that is in the CAA at the time fork() is done.
- The use of the CAA user word is not supported in the assembler user exit routine (CEEBXITA and related modules), or in the CEEPIPI service routines specified in the service routine vector (@LOAD, @DELETE, @GETSTORE, @FREESTORE, @EXCEPRTN, @MSGRTN).
- Any user code that runs on a CEEPIPI environment before the first (call_main), (call_sub), (call_sub_addr), (call_sub_addr_nochk), or (call_sub_addr_nochk2) request will see zero in the CAA_USER_WORD. Examples of this code include static constructors run for programs that get loaded when a CEEPIPI environment is initialized. Any changes to the CAA_USER_WORD made by this code are overlaid when the next (call_main), (call_sub), (call_sub_addr), (call_sub_addr_nochk), or (call_sub_addr_nochk2) is done for that environment.

(get_user_word) -- get value to be used to initialize CAA user word

Syntax

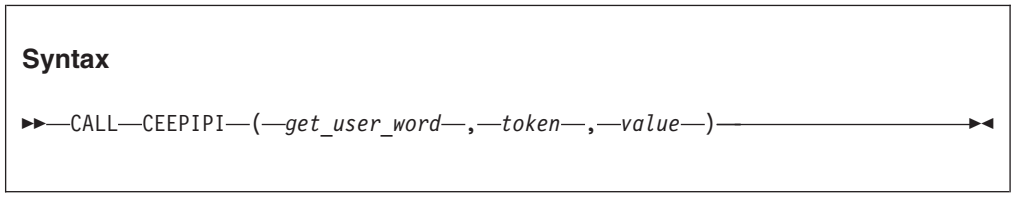

get_user_word **(input)**
A fullword containing the get_user_word function code (integer value = 18).

token **(input)**
A fullword with the value of the token of the environment. This is the token returned by a (init_main), (init_main_dp), (init_sub) or (init_sub_dp) request.

value **(output)**
A fullword that will be returned containing the current value that will be used to initialize the CAA user word when the next application is invoked using the (call_main), (call_sub), (call_sub_addr), (call_sub_addr_nochk), or (call_sub_addr_nochk2) functions.

Return codes: Register 15 contains a return code indicating the success or failure of the request. Possible return codes (in decimal) are:

0 The current value of the User Word has been returned.
4 Non-valid function code.
16 The *token* is not valid.

Usage notes:

- The value returned will be the one previously set by the last (set_user_word) request for this token. If no (set_user_word) has yet been done for this token, 0 will be returned.

Service routines

Under Language Environment, you can specify several service routines to execute a main routine or subroutine in the preinitialized environment. To use the routines, specify a list of addresses of the routines in a service routine vector as shown in Figure 108.

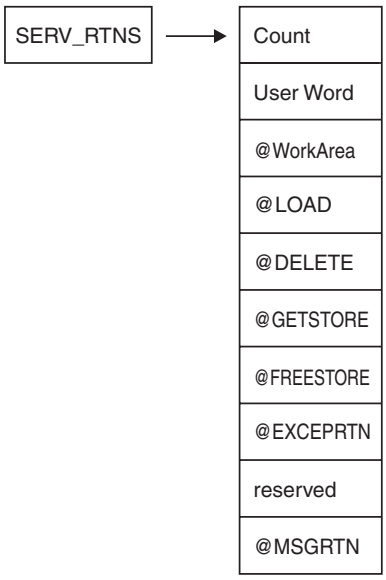

Figure 108. Format of service routine vector

The service routine vector is composed of a list of fullword addresses of routines that are used instead of Language Environment service routines. The list of addresses is preceded by the number of the addresses in the list, as specified in the *count* field of the vector. The *service_rtns* parameter that you specify in calls to (init_main) and (init_sub) contains the address of the vector itself. If this pointer is specified as zero (0), Language Environment routines are used instead of the service routines shown in Figure 108.

The @GETSTORE and @FREESTORE service routines must be specified together; if one is zero, the other is automatically ignored. The same is true for the @LOAD and @DELETE service routines. If you specify the @GETSTORE and @FREESTORE service routines, you do not have to specify the @LOAD and @DELETE service routines and vice-versa.

When replacing only the storage management routines without the program management routines, the user must be aware that they may not be accounting for all the storage obtained on behalf of the application. Contents management obtains storage for the load module being loaded. This storage will not be managed by the user storage management routines.

The service routines may be AMODE(31) / RMODE(ANY) if the application has no AMODE(24) programs. Otherwise the service routines must be AMODE(ANY) / RMODE(24).

Count
A fullword binary number representing the number of fullwords that follow.

The *count* does not include itself. In Figure 108 on page 514, the count is 9. For each vector slot, a zero represents the absence of the routine, a nonzero represents the presence of a routine.

User Word
A fullword that is passed to the service routines. The *user word* is provided as a means for your routine to communicate to the service routines.

@WorkArea
An address of a work area of at least 256 bytes that is doubleword aligned. The first word of the area contains the length of the area provided. This parameter is required if service routines are present in the service routine vector. This length field must be initialized each time you bring up a new PreInit environment.

@LOAD
This routine loads named routines for application management. The parameter that is passed contains the following:

Name_addr
The fullword address of the name of the module to load (input parameter).

Name_length
A fixed binary(31) length of the module name (input parameter).

User_word
A fullword user field (input parameter).

Load_point
Either zero (0), or the address where the @LOAD routine is to store the load point address of the loaded routine (input and output parameter).

Entry_point
The fullword entry point address of the loaded routine (output parameter).

Module_size
The fixed binary(31) size of the module that was loaded (output parameter).

Return code
The fullword return code from load (output).

Reason code
The fullword reason code from load (output). The return and reason codes are listed in Table 71.

Table 71. Return and reason codes

Return code	Reason code	Description
0	0	Successful
0	12	Successful — loaded using SVC8
4	4	Unsuccessful — module loaded above the line when in AMODE(24)
8	4	Unsuccessful — load failed
16	4	Unsuccessful — uncorrectable error occurred

@DELETE
This routine deletes routines for application management. The parameter that is passed contains the following:

Name_addr
The fullword address of the module name to be deleted (input parameter).

Name_length
A fixed binary(31) length of module name (input parameter).

User_word
A fullword user field (input parameter).

Rsvd_word
A fullword reserved for future use (input parameter); must be zero.

Return code
The return code from delete service (output).

Reason code
The reason code from delete service (output). The return and reason codes are listed in Table 72.

Table 72. Return and reason codes

Return code	Reason code	Description
0	0	Successful
8	4	Unsuccessful — delete failed
16	4	Unsuccessful — uncorrectable error occurred

@GETSTORE
This routine allocates storage on behalf of the storage manager. This routine can rely on the caller to provide a save area, which can be the @Workarea. The parameter list that is passed contains the following:

Amount
A fixed binary(31) amount of storage requested (input parameter).

Subpool_no
A fixed binary(31) subpool number 0-127 (input parameter). Language Environment allocates storage from the process-level storage pools.

User word
A fullword user field (input parameter).

Flags A fullword flag area (input parameter), as shown in the following table. The remaining flag bits are reserved for future use and must be zero.

Bit	Setting	Description
Zero	ON	The storage required must be allocated below the 16MB line.
	OFF	The storage required can be allocated anywhere.
One	ON	The storage required was requested to be backed by 1MB pages. This setting might be ignored.
	OFF	The storage required was requested to be backed by the default 4KB pages.

Stg_address
The fullword address of the storage obtained or zero (output parameter).

Obtained
A fixed binary(31) number of bytes obtained (output parameter).

Return code
The return code from @GETSTORE service (output parameter).

Reason code
The reason code from the @GETSTORE service (output parameter).

The return and reason codes are listed in Table 73.

Table 73. Return and reason codes

Return code	Reason code	Description
0	0	Successful
16	0	Unsuccessful — uncorrectable error occurred

@FREESTORE

This routine frees storage on behalf of the storage manager. The parameter list passed contains the following:

Amount
The fixed binary(31) amount of storage to free (input parameter).

Subpool_no
The fixed binary(31) subpool number 0-127 (input parameter). Language Environment allocates storage from the process-level storage pools.

User word
A fullword user field (input parameter).

Stg_address
The fullword address of the storage to free (input parameter).

Return code
The return code from the @FREESTORE service (output).

Reason code
The reason code from the @FREESTORE service (output).

The return and reason codes are listed in Table 74.

Table 74. Return and reason codes

Return code	Reason code	Description
0	0	Successful
16	0	Unsuccessful — uncorrectable error occurred

@EXCEPRTN

This routine traps program interruptions and abends for condition management. The parameter list passed contains the following:

Handler_addr
During an initialization call, this parameter contains the address of the Language Environment condition handler. During a termination call, this parameter contains a pointer to a fullword field containing zeroes.

Environment_token
A fullword Recovery Environment token (input). This token is different from the Preinitialization environment token used with CEEPIPI calls.

User_word
A fullword user field (input parameter)

Abend_flags
A fullword flag area containing abend flags (input)

Check_flags
A fullword flag area containing program check flags (input)

Return code
The return code from the @EXCEPRTN service (output).

Reason code
The reason code from the @EXCEPRTN service (output).

The exception router is responsible for trapping and routing exceptions. These are the services typically obtained via the ESTAE and ESPIE macros.

During initialization, Language Environment puts the address of the Language Environment condition handler in the first field of the above parameter list, and sets the environment token field to a value that must be passed on to the Language Environment condition handler. It also sets abend and check flags as appropriate, and then calls your exception router to establish an exception handler.

The meaning of the bits in the abend flags are given by the following declare:

```
dcl
 1 abendflags,
   2 system,
     3 abends bit(1),  /* control for system abends desired  */
     3 rsrv1  bit(15), /* reserved                           */
   2 user,
     3 abends bit(1),  /* control for user abends desired    */
     3 rsrv2  bit(15); /* reserved                           */
```

The meaning of the bits in the check flags is given by the following declare:

```
1 checkflags,
  2 type,
    3 reserved3             bit(1),
    3 operation             bit(1),
    3 privileged_operation  bit(1),
    3 execute               bit(1),
    3 protection            bit(1),
    3 addressing            bit(1),
    3 specification         bit(1),
    3 data                  bit(1),
    3 fixed_overflow        bit(1),
    3 fixed_divide          bit(1),
    3 decimal_overflow      bit(1),
    3 decimal_divide        bit(1),
    3 exponent_overflow     bit(1),
    3 exponent_underflow    bit(1),
    3 significance          bit(1),
    3 float_divide          bit(1),
  2 reserved4             bit(16);
```

The return and reason codes that the exception router must use are listed in Table 75.

Table 75. Return and reason codes

Return code	Reason code	Description
0	0	Successful

Table 75. Return and reason codes (continued)

Return code	Reason code	Description
4	4	Unsuccessful — the exit could not be established or removed
16	4	Unsuccessful — unrecoverable error occurred

When an exception occurs, the exception handler must determine if the Language Environment condition handler is interested in the exception (by examining abend and check flags). If the condition handler is not interested in the exception, the exception handler must treat the program as in error, but can assume the environment for the thread to be functional and reusable. If the condition handler is interested in the exception, the exception handler must invoke the condition handler, passing the parameters listed in Table 76.

Table 76. Parameters for language environment condition handler

Parameter	Attributes	Type
Environment Token	Fixed Bin(31)	Input
Address of SDWA	Pointer	Input
Return Code	Fixed Bin(31)	Output
Reason Code	Fixed Bin(31)	Output

The return and reason codes upon return from the Language Environment condition handler are listed in Table 77.

Table 77. Return and reason codes

Return code	Reason code	Description
0	0	Continue with the exception. Percolate the exception taking whatever action would have been taken had it not been handled at all. In this case, your exception handler can assume the environment for the thread to be functional and reusable.
0	4	Continue with the exception. Percolate the exception taking whatever action would have been taken had it not been handled at all. In this case, the environment for the thread is probably unreliable and not reusable. A forced termination is suggested.
4	0	Resume execution using the updated SDWA. The invoked Language Environment condition handler will have already used the SETRP RTM macro to set the SDWA for correct resumption.

During termination, the exception router is invoked with the condition handler address (first parameter) set to zero to de-establish the exit (if it was established during initialization).

When a nested enclave is created, Language Environment calls the exception router to establish another exception handler exit, and then makes a call to de-establish it when the nested enclave terminates. If an exception occurs while the second exit is active, special processing is performed. Depending on what

this second exception is, either the first exception will not be retried, or processing will continue on the first exception by requesting retry for the second exception.

If the Language Environment condition handler determines that execution should resume for an exception, it will set the SDWA with SETRP and return with return/reason codes 4/0. Execution will resume in library code or in user code, depending on what the exception was.

The exception handler must be capable of restoring all the registers from the SDWA when control is given to the retry routine. The ESPIE and ESTAE services are capable of accomplishing this.

In using the exception router service:

- The exception handler should not invoke the Language Environment condition handler if active I/O has been halted and is not restorable.
- This service requires an XA or ESA environment.

If an exception occurs while the exception handler is in control before another exception handler exit has been stacked, the exception handler should assume that the exception could not be handled and that the environment for the program (thread) is damaged. In this case, the exception handler should force termination of the preinitialized environment.

When @EXCEPRTN is specified, the following items are not supported:

- XPLINK applications
- POSIX(ON) applications
- DYNDUMP settings other than DYNDUMP(,NODYNAMIC)
- IMS applications
- Applications that use Binary Floating Point (BFP) or Decimal Floating Point (DFP) numbers
- Applications that use the Compare-and-Trap family of instructions

Note:

1. If the passed-in SDWA from the exception handler to the Language Environment condition handler does not contain valid high registers, the "HR_VALID" flag bit in the Machine State "FLAGS" field will be off, indicating that the saved high registers are not valid.
2. If a nested enclave ends because of an unhandled condition and a 4094-40 ABEND is declared, the high registers may not be valid in the Machine State that contains information about the 4094-40 ABEND.
3. If registers in the passed-in SDWA at the time of interrupt (in the SDWAGRSV field) are not appropriate or recognizable, and Language Environment instead saves the registers from the SDWASRSV field in the Machine State, the high registers may not be valid in the Machine State.

@MSGRTN

This routine allows error messages to be processed by the caller of the application.

If the message pointer is zero, your message routine is expected to return the size of the line to which messages are written (in the line_length field). This allows messages to be formatted correctly — that is, broken at places such as blanks.

Message
A pointer to the first byte of text that is printed, or zero (input parameter).

Msg_len
The fixed binary(31) length of the message (input parameter).

User word
A fullword user field (input parameter).

Line_length
The fixed binary(31) size of the output line length. This is used when Message is zero (output parameter).

Return and reason codes
Two fullwords containing the return and reason codes listed in Table 78 (output parameters).

Table 78. Return and reason codes

Return code	Reason code	Description
0	0	Successful
16	4	Unsuccessful — uncorrectable error occurred

An example program invocation of CEEPIPI

This section includes a sample of a PreInit assembler driver program. This assembler program called ASMPIPI invokes CEEPIPI to:
- Initialize a subroutine environment under Language Environment
- Load and call a reentrant HLL subroutine
- Terminate the Language Environment environment

Following the assembler program are examples of the program HLLPIPI written in C, COBOL, and PL/I. HLLPIPI is called by an assembler program, ASMPIPI. ASMPIPI uses the Language Environment preinitialized program subroutine call interface. You can use the assembler program to call the HLL versions of HLLPIPI.

```
*COMPILATION UNIT:  LEASMPIP
*************************************************************************
*                                                                       *
*   Function :  CEEPIPI - Initialize the Preinit                        *
*                         environment, call a Preinit                   *
*                         HLL program, and terminate the environment. *
*                                                                       *
* 1.Call CEEPIPI to initialize a subroutine environment.                *
* 2.Call CEEPIPI to load and call a reentrant HLL subroutine.           *
* 3.Call CEEPIPI to terminate the Preinit environment.   *
*                                                                       *
* Note:  ASMPIPI is not reentrant.                                      *
*                                                                       *
*************************************************************************
*
* ======================================================================
* Standard program entry conventions.
* ======================================================================
ASMPIPI  CSECT
         STM   R14,R12,12(R13)    Save caller's registers
         LR    R12,R15            Get base address
         USING ASMPIPI,R12        Identify base register
         ST    R13,SAVE+4         Back-chain the save area
         LA    R15,SAVE           Get addr of this routine's save area
         ST    R15,8(R13)         Forward-chain in caller's save area
```

```
         LR    R13,R15            R13 -> save area of this routine
*
* Load   CEEPIPI service routine into main storage.
*
         LOAD  EP=CEEPIPI         Load CEEPIPI routine dynamically
         ST    R0,PPRTNPTR        Save the addr of CEEPIPI routine
*
* Initialize a Preinit subroutine environment.
*
INIT_ENV EQU   *
         LA    R5,PPTBL           Get address of Preinit Table
         ST    R5,@CEXPTBL        Ceexptbl-addr -> Preinit Table
         L     R15,PPRTNPTR       Get address of CEEPIPI routine
*                                 Invoke CEEPIPI routine
         CALL  (15),(INITSUB,@CEXPTBL,@SRVRTNS,RUNTMOPT,TOKEN)
*                                 Check return code:
         LTR   R2,R15               Is R15 = zero?
         BZ    CSUB                 Yes (success).. go to next section
*                                   No (failure).. issue message
         WTO   'ASMPIPI : call to (INIT_SUB) failed',ROUTCDE=11
         C     R2,=F'8'           Check for partial initialization
         BE    TSUB                 Yes.. go do Preinit termination
*                                   No.. issue message & quit
         WTO   'ASMPIPI : INIT_SUB failure RC is not 8.',ROUTCDE=11
         ABEND (R2),DUMP          Abend with bad RC and dump memory
*
* Call the subroutine, which is loaded by LE
*
CSUB     EQU   *
         L     R15,PPRTNPTR       Get address of CEEPIPI routine
         CALL  (15),(CALLSUB,PTBINDEX,TOKEN,PARMPTR,                  X
               SUBRETC,SUBRSNC,SUBFBC)   Invoke CEEPIPI routine
*                                 Check return code:
         LTR   R2,R15               Is R15 = zero?
         BZ    TSUB                 Yes (success).. go to next section
*                                   No (failure).. issue message & quit
         WTO   'ASMPIPI : call to (CALL_SUB) failed',ROUTCDE=11
         ABEND (R2),DUMP          Abend with bad RC and dump memory
*
* Terminate the environment
*
TSUB     EQU   *
         L     R15,PPRTNPTR       Get address of CEEPIPI routine
         CALL  (15),(TERM,TOKEN,ENV_RC)  Invoke CEEPIPI routine
*                                 Check return code:
         LTR   R2,R15               Is R15 = zero ?
         BZ    DONE                 Yes (success).. go to next section
*                                   No (failure).. issue message & quit
         WTO   'ASMPIPI : call to (TERM) failed',ROUTCDE=11
         ABEND (R2),DUMP          Abend with bad RC and dump memory
*
* Standard exit code.
*
DONE     EQU   *
         LA    R15,0                Passed return code for system
         L     R13,SAVE+4           Get address of caller's save area
         L     R14,12(R13)          Reload caller's register 14
         LM    R0,R12,20(R13)       Reload caller's registers 0-12
         BR    R14                  Branch back to caller
*
* ================================================================
* CONSTANTS and SAVE AREA.
* ================================================================
SAVE     DC    18F'0'
PPRTNPTR DS    A                  Save the address of CEEPIPI routine
*
* Parameters passed to a (INIT_SUB) call.
```

```
*
INITSUB  DC    F'3'               Function code to initialize for subr
@CEXPTBL DC    A(PPTBL)           Address of Preinit Table
@SRVRTNS DC    A(0)               Addr of service-rtns vector, 0 = none
RUNTMOPT DC    CL255' '           Fixed length string of runtime optns
TOKEN    DS    F                  Unique value returned (output)
*
* Parameters passed to a (CALL_SUB) call.
*
CALLSUB  DC    F'4'               Function code to call subroutine
PTBINDEX DC    F'0'               The row number of Preinit Table entry
PARMPTR  DC    A(0)               Pointer to @PARMLIST or zero if none
SUBRETC  DS    F                  Subroutine return code (output)
SUBRSNC  DS    F                  Subroutine reason code (output)
SUBFBC   DS    3F                 Subroutine feedback token (output)
*
* Parameters passed to a (TERM) call.
*
TERM     DC    F'5'               Function code to terminate
ENV_RC   DS    F                  Environment return code (output)
*
* ===================================================================
* Preinit Table.
* ===================================================================
PPTBL    CEEXPIT  ,               Preinit Table with index
         CEEXPITY HLLPIPI,0       0 = dynamically loaded routine
*
         CEEXPITS ,               End of PreInit table
*
*
         LTORG
R0       EQU   0
R1       EQU   1
R2       EQU   2
R3       EQU   3
R4       EQU   4
R5       EQU   5
R6       EQU   6
R7       EQU   7
R8       EQU   8
R9       EQU   9
R10      EQU   10
R11      EQU   11
R12      EQU   12
R13      EQU   13
R14      EQU   14
R15      EQU   15
         END   ASMPIPI
```

HLLPIPI examples

Following is an example of a C subroutine called by ASMPIPI:

```
/*Module/File Name:  EDCPIPI  */
 /*********************************************************/
 /*                                                       */
 /* HLLPIPI is called by an assembler program, ASMPIPI.   */
 /* ASMPIPI uses the LE preinitialized program            */
 /* subroutine call interface. HLLPIPI can be written     */
 /* in COBOL, C, or PL/I.                                 */
 /*                                                       */
 /*********************************************************/
#include <stdio.h>
#include <string.h>
#include <time.h>
#pragma linkage(HLLPIPI, fetchable)
HLLPIPI ()
{
```

```
 printf ( "C subroutine beginning\n" );
 printf ( "Called using LE PreInit call\n" );
 printf ( "Subroutine interface.\n" );
 printf ( "C subroutine returns to caller\n" );
}
```

Following is an example of a COBOL program called by ASMPIPI:

```
CBL LIB,QUOTE
      *Module/File Name: IGZTPIPI
      ************************************************************
      *                                                          *
      * HLLPIPI is called by an assembler program, ASMPIPI.      *
      * ASMPIPI uses the LE preinitialized program               *
      * subroutine call interface. HLLPIPI can be written        *
      * in COBOL, C, or PL/I.                                    *
      *                                                          *
      ************************************************************
       IDENTIFICATION DIVISION.
       PROGRAM-ID. HLLPIPI.

       DATA DIVISION.
       WORKING-STORAGE SECTION.
       PROCEDURE DIVISION.
           DISPLAY "COBOL subprogram beginning".
           DISPLAY "Called using LE Preinitialization ".
           DISPLAY "Call subroutine interface.".
           DISPLAY "COBOL subprogram returns to caller.".

           GOBACK.
```

Following is an example of a routine called by ASMPIPI:

```
 /*Module/File Name:  IBMPIPI                                */
 /************************************************************/
 /*                                                          */
 /* HLLPIPI is called by an assembler program, ASMPIPI.      */
 /* ASMPIPI uses the LE preinitialized program               */
 /* subroutine call interface. HLLPIPI can be written        */
 /* in COBOL, C, or PL/I.                                    */
 /*                                                          */
 /************************************************************/
  HLLPIPI: PROC OPTIONS(FETCHABLE);
           DCL RESULT FIXED BIN(31,0) INIT(0);
           PUT SKIP LIST
               ('HLLPIPI  : PLI subroutine beginning.');
           PUT SKIP LIST
               ('HLLPIPI  : Called LE PIPI Call ');
           PUT SKIP LIST
               ('HLLPIPI  : Subroutine interface.   ');
           PUT SKIP LIST
               ('HLLPIPI  : PLI program returns to caller.');
           RETURN;
  END HLLPIPI;
```

Chapter 31. Using nested enclaves

An enclave is a logical runtime structure that supports the execution of a collection of routines (see Chapter 13, "Program management model," on page 161 for a detailed description of Language Environment enclaves).

Language Environment explicitly supports the execution of a single enclave within a Language Environment process. However, by using the system services and language constructs described in this topic, you can create an additional, or nested, enclave and initiate its execution within the same process.

The enclave that issues a call to system services or language constructs to create a nested enclave is called the *parent* enclave. The nested enclave that is created is called the *child* enclave. The child must be a main routine; a link to a subroutine by commands and language constructs is not supported under Language Environment.

If a process contains nested enclaves, none or only one enclave can be running with POSIX(ON).

Creating child enclaves

In Language Environment, you can use the following methods to create a child enclave:

- Under CICS, the EXEC CICS LINK and EXEC CICS XCTL commands. For more information about these commands, go to the IBM Knowledge Center at http://publib.boulder.ibm.com/infocenter/cicsts/v3r1/index.jsp .
- Under z/OS, the SVC LINK macro
- Under z/OS, the C `system()` function (see *z/OS XL C/C++ Programming Guide* for more information about `system()`).
- Under z/OS, the PL/I FETCH and CALL to any of the following PL/I routines with PROC OPTIONS(MAIN) specified:
  - Enterprise PL/I for z/OS
  - PL/I for MVS & VM
  - OS PL/I Version 2
  - OS PL/I Version 1 Release 5.1
  - Relinked OS PL/I Version 1 Release 3.0 – 5.1

  Such a routine, called a *fetchable main* in this section, can only be introduced by a FETCH and CALL from a PL/I routine. COBOL cannot dynamically call a PL/I main and C cannot issue a `fetch()` against a PL/I main. In addition, a fetchable main cannot be dynamically loaded using the CEELOAD macro.

  The routine performing the FETCH and CALL must be compiled with the Enterprise PL/I for z/OS or the PL/I for MVS & VM compiler, or be a relinked OS PL/I routine.

If the target routine of any of these commands is not written in a Language Environment-conforming HLL or Language Environment-conforming assembler, no nested enclave is created.

© Copyright IBM Corp. 1991, 2015

XPLINK considerations

A nested enclave situation where the parent enclave is running in an XPLINK(OFF) environment and the child enclave requires XPLINK(ON) is not supported. A parent enclave running XPLINK(ON) will support a nested child enclave of either XPLINK(ON) or XPLINK(OFF). In the latter case, the application in the child enclave will go through compatibility glue code when calling the C RTL (that is, the child enclave will run with an environment with the XPLINK runtime option forced ON).

COBOL considerations

In a non-CICS environment, OS/VS COBOL programs are supported in a single enclave only.

PL/I considerations

PL/I MTF is supported in the initial enclave only. If PL/I MTF is found in a nested enclave, Language Environment diagnoses it as an error. If a PL/I MTF application contains nested enclaves, the initial enclave must contain a single task. Violation of this rule is not diagnosed and is likely to cause unpredictable results.

Determining the behavior of child enclaves

If you want to create a child enclave, you need to consider the following factors:

- The language of the main routine in the child enclave
- The sources from which each type of child enclave gets runtime options
- The default condition handling behavior of each type of child enclave
- The setting of the TRAP runtime option in the parent and the child enclave

All of these interrelated factors affect the behavior, particularly the condition handling, of the created enclave. The sections that follow describe how the child enclaves created by each method (EXEC CICS LINK, EXEC CICS XCTL, SVC LINK, C `system()` function, and PL/I FETCH and CALL of a fetchable main) will behave.

Creating child enclaves with EXEC CICS LINK or EXEC CICS XCTL

If your C, C++, COBOL, or PL/I application uses EXEC CICS commands, you must also link-edit the EXEC CICS interface stub, DFHELII, with your application. To be link-edited with your application, DFHELII must be available in the link-edit SYSLIB concatenation.

For more information about the EXEC CICS LINK and EXEC CICS XCTL commands, go to the IBM Knowledge Center at http://publib.boulder.ibm.com/infocenter/cicsts/v3r1/index.jsp .

How runtime options affect child enclaves

The child enclave gets its runtime options from one of the sources discussed in “Specifying runtime options under CICS” on page 401. The runtime options are completely independent of the creating enclave, and can be set on an enclave-by-enclave basis.

Some of the methods for setting runtime options might slow down your transaction. Follow these suggestions to improve performance:

- If you need to specify options in CEEUOPT specify only those options that are different from system defaults.
- Before putting transactions into production, request a storage report (using the RPTSTG runtime option) to minimize the number of GETMAINs and FREEMAINs required by the transactions.
- Ensure that VS COBOL II transactions are not link-edited with IGZETUN and IGZEOPT, which are no longer supported and which cause an informational message to be logged. Logging this message for every transaction inhibits system performance. The sample user condition handler CEEWUCHA can be used to prevent this informational message from being logged. See the Enterprise COBOL for z/OS library (http://www-01.ibm.com/support/docview.wss?uid=swg27036733). for more information.

How conditions arising in child enclaves are handled

This section describes the default condition handling for child enclaves created by EXEC CICS LINK or EXEC CICS XCTL.

Condition handling varies depending on the source of the condition, and whether an EXEC CICS HANDLE ABEND is active:

- If a Language Environment or CEEBXITA-initiated (generated by setting the CEEAUE_ABND field of CEEBXITA) abend occurs, the CICS thread is terminated. This occurs even if a CICS HANDLE ABEND is active, because CICS HANDLE ABEND does not gain control in the event of a Language Environment abend.
- If a software condition of severity 2 or greater occurs, Language Environment condition handling takes place. If the condition remains unhandled, the problem is not percolated to the parent enclave. The CICS thread is terminated with an abend. These actions take place even if a CICS HANDLE ABEND is active, because CICS HANDLE ABEND does not gain control in the event of a Language Environment software condition.
- If a user abend or program check occurs, the following actions take place:
  - If no EXEC CICS HANDLE ABEND is active, and TRAP(ON) is set in the child enclave, Language Environment condition handling takes place. If the abend or program check remains unhandled, the problem is not propagated to the parent enclave. The CICS thread is terminated with an abend.
  - An active EXEC CICS HANDLE ABEND overrides the setting of TRAP. The action defined by the EXEC CICS HANDLE ABEND takes place.

Creating child enclaves by calling a second main program

The behavior of a child enclave created by calling a second main program is determined by the language of its main or initializing routine: C, C++, COBOL, Fortran, PL/I, or Language Environment-conforming assembler (generated by use of the CEEENTRY and associated macros).

How runtime options affect child enclaves

Runtime options will be processed in the normal manner for enclaves created because of a call to a second main, that is, programmer defaults present in the load module will be merged, options in the command line equivalent will also be processed, as will options passed by the assembler user exit if present.

How conditions arising in child enclaves are handled

The command-line equivalent is determined in the same manner as for a SVC LINK.

Creating child enclaves using SVC LINK

The behavior of a child enclave created by an SVC LINK is determined by the language of its main routine: C, C++, COBOL, Fortran, PL/I, or Language Environment-conforming assembler (generated by use of the CEEENTRY and associated macros).

When issuing a LINK to a routine, the high-order bit must be set on for the last word of the parameter list. To do this, set VL=1 on the LINK assembler macro.

How runtime options affect child enclaves

Child enclaves created by an SVC LINK get runtime options differently, depending on the language that the main routine of the child enclave is written in.

Child enclave has a C, C++, Fortran, PL/I, or Language Environment-conforming assembler main routine: If the main routine of the child enclave is written in C, C++, Fortran, PL/I, or in Language Environment-conforming assembler, the child enclave gets its runtime options through a merge from the usual sources (see Chapter 9, “Using runtime options,” on page 119 for more information). Therefore, you can set runtime options on an enclave-by-enclave basis.

Child enclave has a COBOL main program: If the main program of the child enclave is written in COBOL, the child enclave inherits the runtime options of the creating enclave. Therefore, you cannot set runtime options on an enclave-by-enclave basis.

How conditions arising in child enclaves are handled

If a Language Environment or CEEBXITA-initiated (generated by setting the CEEAUE_ABND field of CEEBXITA) abend occurs in a child enclave created by SVC LINK, regardless of the language of its main, the entire process is terminated.

Condition handling in child enclaves created by SVC LINK varies, depending on the language of the child's main routine, the setting of the TRAP runtime option in the parent and child enclaves, and the type of condition. Refer to one of the following tables to see what happens when a condition remains unhandled in a child enclave.

Table 79. Handling conditions in child enclaves

If the child enclave was created by:	See:
An SVC LINK and has a C, C++, or Language Environment-conforming assembler main routine	Table 80 on page 529
An SVC LINK and has a COBOL main program	Table 81 on page 529
An SVC LINK and has a Fortran or PL/I main routine	Table 82 on page 529

You should always run your applications with TRAP(ON) or your results might be unpredictable.

Child enclave has a C, C++, or Language Environment-conforming assembler main routine: Table 80 on page 529 shows the unhandled condition behavior.

Table 80. Unhandled condition behavior in a C, C++, or assembler child enclave

Condition	Parent enclave TRAP(ON) Child enclave TRAP(ON)	Parent enclave TRAP(ON) Child enclave TRAP(OFF)	Parent enclave TRAP(OFF) Child enclave TRAP(ON)	Parent enclave TRAP(OFF) Child enclave TRAP(OFF)
Unhandled condition severity 0 or 1	Resume child enclave	Resume child enclave	Resume child enclave	Resume child enclave
Unhandled condition severity 2 or above	Resume parent enclave, and ignore condition	Resume parent enclave, and ignore condition	Resume parent enclave, and ignore condition	Resume parent enclave, and ignore condition
Non-Language Environment abend	Resume parent enclave, and ignore condition	Process terminated with original abend code	Resume parent enclave, and ignore condition	Process terminated with original abend code
Program check	Resume parent enclave, and ignore condition	Process terminated with abend U4036, Reason Code=2	Resume parent enclave, and ignore condition	Process terminated with abend S0Cx

Child enclave has a COBOL main program: Child enclaves created by SVC LINK that have a COBOL main program inherit the runtime options of the parent enclave that created them. Therefore, the TRAP setting of the parent and child enclaves is always the same.

Table 81. Unhandled condition behavior in a COBOL child enclave

Condition	Parent enclave TRAP(ON) Child enclave TRAP(ON)	Parent enclave TRAP(OFF) Child enclave TRAP(OFF)
Unhandled condition severity 0 or 1	Resume child enclave	Resume child enclave
Unhandled condition severity 2 or above	Signal CEE391 (Severity=1, Message Number=3361) in parent enclave	Process terminated with abend U4094 RC=40
Non-Language Environment abend	Signal CEE391 in parent enclave	Process terminated with original abend code
Program check	Signal CEE391 in parent enclave	Process terminated with abend S0Cx

Child enclave has a Fortran or PL/I main routine: Table 82 lists unhandled condition behavior.

Table 82. Unhandled condition behavior in a Fortran or PL/I child enclave

Condition	Parent enclave TRAP(ON) Child enclave TRAP(ON)	Parent enclave TRAP(ON) Child enclave TRAP(OFF)	Parent enclave TRAP(OFF) Child enclave TRAP(ON)	Parent enclave TRAP(OFF) Child enclave TRAP(OFF)
Unhandled condition severity 0 or 1	Resume child enclave	Resume child enclave	Resume child enclave	Resume child enclave

Table 82. Unhandled condition behavior in a Fortran or PL/I child enclave (continued)

Condition	Parent enclave TRAP(ON) Child enclave TRAP(ON)	Parent enclave TRAP(ON) Child enclave TRAP(OFF)	Parent enclave TRAP(OFF) Child enclave TRAP(ON)	Parent enclave TRAP(OFF) Child enclave TRAP(OFF)
Unhandled condition severity 2 or above	Signal CEE391 (Severity=1, Message Number=3361) in parent enclave	Signal CEE391 in parent enclave	Process terminated with abend U4094 RC=40	Process terminated with abend U4094 RC=40
Non-Language Environment abend	Signal CEE391 in parent enclave	Process terminated with original abend code	Process terminated with abend U4094, Reason Code=40	Process terminated with original abend code
Program check	Signal CEE391 in parent enclave	Process terminated with abend U4036, Reason Code=2	Process terminated with abend U4094 RC=40	Process terminated with abend S0Cx

Creating child enclaves using the C system() function

Child enclaves created by the C `system()` function get runtime options through a merge from the usual sources. See Chapter 9, "Using runtime options," on page 119 for more information. Therefore, you can set runtime options on an enclave-by-enclave basis. See *z/OS XL C/C++ Runtime Library Reference* for information on the `system()` function when running with POSIX(ON).

When you perform a `system()` function to a COBOL program, in the form:

```
system("PGM=program_name,PARM='...'")
```

the runtime options specified in the PARM= portion of the `system()` function are ignored. However, runtime options are merged from CEEDOPT, CEEUOPT, and the CEEAUE_A_OPTIONS from the assembler user exit.

z/OS UNIX considerations

To create a nested enclave under z/OS UNIX, you must either:

- Be running with POSIX(OFF) and issue `system()`, or
- Be running with POSIX(ON) and have set the environment variables to signal that you want to establish a nested enclave. You can use the `__POSIX_SYSTEM` environment variable to cause a `system()` to establish a nested enclave instead of performing a `spawn()`. `__POSIX_SYSTEM` can be set to `NO`, `No`, or `no`.

The `system()` function is not thread safe. It cannot be called simultaneously from more than one thread. A multi-threaded application must ensure that no more than one `system()` call is ever outstanding from the various threads. If this restriction is violated, unpredictable results may occur. In a multiple enclave environment, the first enclave must be running with POSIX(ON) and all other nested enclaves must be running with POSIX(OFF).

How conditions arising in child enclaves are handled

If a Language Environment- or CEEBXITA-initiated (generated by setting the CEEAUE_ABND field of CEEBXITA) abend occurs in a child enclave created by a call to `system()`, the entire process is terminated.

Depending on what the settings of the TRAP runtime option are in the parent and child enclave, the following might cause the child enclave to terminate:

- Unhandled user abend
- Unhandled program check

TRAP(ON | OFF) effects for enclaves created by system()

Table 83 describes the effects of TRAP(ON|OFF) for enclaves that are created by the system() function.

Table 83. Unhandled condition behavior in a system()-created child enclave

Condition	Parent enclave TRAP(ON) Child enclave TRAP(ON)	Parent enclave TRAP(ON) Child enclave TRAP(OFF)	Parent enclave TRAP(OFF) Child enclave TRAP(ON)	Parent enclave TRAP(OFF) Child enclave TRAP(OFF)
Unhandled condition severity 0 or 1	Resume child enclave	Resume child enclave	Resume child enclave	Resume child enclave
Unhandled condition severity 2 or above	Resume parent enclave, and ignore condition	Resume parent enclave, and ignore condition	Resume parent enclave, and ignore condition	Resume parent enclave, and ignore condition
Non-Language Environment abend	Resume parent enclave, and ignore condition	Process terminated with original abend code	Resume parent enclave, and ignore condition	Process terminated with original abend code
Program check	Resume parent enclave, and ignore condition	Process terminated with abend U4036, Reason Code=2	Resume parent enclave, and ignore condition	Process terminated with abend S0Cx

Creating child enclaves containing a PL/I fetchable main

Fetch and call considerations of PL/I fetchable mains are discussed in "Special fetch and call considerations" on page 532.

How runtime options affect child enclaves

Child enclaves created when you issue a FETCH and CALL of a fetchable main get runtime options through a merge from the usual sources (see Chapter 9, "Using runtime options," on page 119 for more information). Therefore, you can set runtime options on an enclave-by-enclave basis.

How conditions arising in child enclaves are handled

If a Language Environment or CEEBXITA-initiated (generated by setting the CEEAUE_ABND field of CEEBXITA) abend occurs in a child enclave that contains a fetchable main, the entire process is terminated.

Depending on what the settings of the TRAP runtime option are in the parent and child enclave, the following might cause the child enclave to terminate:

- Unhandled user abend
- Unhandled program check

Table 84 on page 532 describes the unhandled condition behavior in a child enclave.

Table 84. Unhandled condition behavior in a child enclave that contains a PL/I fetchable main

Condition	Parent enclave TRAP(ON) Child enclave TRAP(ON)	Parent enclave TRAP(ON) Child enclave TRAP(OFF)	Parent enclave TRAP(OFF) Child enclave TRAP(ON)	Parent enclave TRAP(OFF) Child enclave TRAP(OFF)
Unhandled condition severity 0 or 1	Resume child enclave	Resume child enclave	Resume child enclave	Resume child enclave
Unhandled condition severity 2 or above	Resume parent enclave, and ignore condition	Resume parent enclave, and ignore condition	Resume parent enclave, and ignore condition	Resume parent enclave, and ignore condition
Non-Language Environment abend	Resume parent enclave, and ignore condition	Process terminated with original abend code	Resume parent enclave, and ignore condition	Process terminated with original abend code
Program check	Resume parent enclave, and ignore condition	Process terminated with abend U4036, Reason code=2	Resume parent enclave, and ignore condition	Process terminated with abend S0Cx

Special fetch and call considerations

You should not recursively fetch and call the fetchable main from within the child enclave; results are unpredictable if you do.

The load module that is the target of the FETCH and CALL is reentrant if all routines in the load module are reentrant. (See Chapter 11, "Making your application reentrant," on page 141 for more information on reentrancy.)

Language Environment relies on the underlying operating system for the management of load module attributes. In general, multiple calls of the same load module are supported for load modules that are any of the following:

- Reentrant

  It is recommended that your target load module be reentrant.
- Nonreentrant but serially reusable

  You should ensure that the main procedure of a nonreentrant but serially reusable load module is self-initializing. Results are unpredictable otherwise.
- Nonreentrant and non-serially reusable

  If a nonreentrant and non-serially reusable load module is called multiple times, each new call brings in a fresh copy of the load module. That is, there are two copies of the load module in storage: one from FETCH and one from CALL. Even though there are two copies of the load module in storage, you need only one PL/I RELEASE statement because upon return from the created enclave the load module loaded by CALL is deleted by the operating system. You need only release the load module loaded by FETCH.

Other nested enclave considerations

The following sections contain other information you might need to know when creating nested enclaves. The topics include:

- The string that CEE3PRM and CEE3PR2 return for each type of child enclave (see *z/OS Language Environment Programming Reference* for more information about the CEE3PRM and CEE3PR2 callable service)
- The return and reason codes that are returned on termination of the child enclave

- How the assembler user exit handles nested enclaves
- Whether the message file is closed on return from a child enclave
- z/OS UNIX considerations
- AMODE considerations

What the enclave returns from CEE3PRM and CEE3PR2

CEE3PRM and CEE3PR2 return to the calling routine the user parameter string that was specified at program invocation. Only program arguments are returned.

See Table 85 to determine whether a user parameter string was passed to your routine, and where the user parameter string is found. This depends on the method you used to create the child enclave, the language of the routine in the child enclave, and the PLIST, TARGET, or SYSTEM setting of the main routine in the child enclave. If a user parameter string was passed to your routine, the user parameter string is extracted from the command-line equivalent for your routine (shown in Table 86 on page 534) and returned to you.

Note: Under CICS, CEE3PRM and CEE3PR2 always return a blank string.

Table 85. Determining the command-line equivalent

Language	Option	Suboption	system()	SVC LINK	FETCH/CALL of a PL/I main
C	`#pragma runopts(PLIST)`	HOST, MVS	PARM=, or the parameter string from the command string passed to `system()`	Halfword length-prefixed string pointed to by R1	Not allowed
		CICS, IMS, OS, or TSO	Not available	Not available	Not allowed
C++	PLIST and TARGET compiler options	Default	PARM=, or the parameter string from the command string passed to `system()`	Halfword length-prefixed string pointed to by R1	Not allowed
		PLIST(OS) or TARGET(IMS)	Not available	Not available	Not allowed
COBOL	N/A	N/A	Null		Not allowed
Fortran	N/A	Not available	Halfword length-prefixed string pointed to by R1	Not allowed	
PL/I	SYSTEM compiler option	MVS	PARM=, or the parameter string from the command string passed to `system()`	Halfword length-prefixed string pointed to by R1	User parameters passed through CALL
		CICS, IMS, TSO	Not available	Not available	SYSTEM(CICS) not supported; others not available.
Language Environment-conforming assembler	CEENTRY PLIST=	HOST, MVS	PARM=, or the parameter string from the command string passed to `system()`	Halfword length-prefixed string pointed to by R1	Not allowed
		CICS, IMS, OS, or TSO	Not available	Not available	Not allowed

If Table 85 indicates that a parameter string was passed to your routine at invocation, the string is extracted from the command-line equivalent listed in the right-hand column of Table 86 on page 534. The command-line equivalent depends on the language of your routine and the runtime options specified for it.

Table 86. Determining the order of runtime options and program arguments

Language of routine	Runtime options in effect?	Order of runtime options and program arguments
C	`#pragma runopts(EXECOPS)`	runtime options / user parms
	`#pragma runopts(NOEXECOPS)`	entire string is user parms
C++	Compiled with `EXECOPS` (default)	runtime options / user parms
	Compiled with `NOEXECOPS`	entire string is user parms
COBOL	CBLOPTS(ON)	user parms / runtime options
	CBLOPTS(OFF)	runtime options / user parms
Fortran		runtime options / user parms
PL/I	PROC OPTIONS(NOEXECOPS) or SYSTEM(CICS | IMS | TSO) is not specified.	runtime options / user parms
	PROC OPTIONS(NOEXECOPS) is specified, or NOEXECOPS is not specified but SYSTEM (CICS | IMS | TSO) is. See "PL/I main procedure parameter passing considerations" on page 571 for more information on the SYSTEM compile option.	entire string is user parms
Language Environment-conforming assembler	CEENTRY EXECOPS=ON	runtime options / user parms
	CEENTRY EXECOPS=OFF	entire string is user parms

Finding the return and reason code from the enclave

The following list tells where to look for the return and reason codes that are returned to the parent enclave when a child enclaves terminates:

- EXEC CICS LINK or EXEC CICS XCTL

  If the CICS thread was not terminated, the return code is placed in the optional RESP2 field of EXEC CICS LINK or EXEC CICS XCTL. The reason code is discarded.

- SVC LINK to a child enclave with a main routine written in any Language Environment-conforming language

  If the process was not terminated, the return code is reported in R15. (See "Managing return codes in Language Environment" on page 153 for more information.) The reason code is discarded.

- C's `system()` function

  If the target command or program of `system()` cannot be started, "-1" is returned as the function value of `system()`. Otherwise, the return code of the child enclave is reported as the function value of `system()`, and the reason code is discarded. (See *z/OS XL C/C++ Programming Guide* for more information about the `system()` function.)

- FETCH and CALL of a fetchable main

  Normally, the enclave return code and reason code are discarded when control returns to a parent enclave from a child enclave. However, in the parent enclave, you can specify the OPTIONS(ASSEMBLER RETCODE) option of the entry constant for the main procedure of the child enclave. This causes the enclave

return code of the child enclave to be saved in R15 as the PL/I return code. You can then interrogate that value by using the PLIRETV built-in function in the parent enclave.

Assembler user exit

An assembler user exit (CEEBXITA) is driven for enclave initialization and enclave termination regardless of whether the enclave is the first enclave created in the process or a nested enclave. The assembler user exit differentiates between first and nested enclave initialization.

Message file

The message file is not closed when control returns from a child enclave.

COBOL multithreading considerations

When COBOL is run in a multithread environment or a PL/I multitasking environment, a nested enclave cannot be created. An attempt to create a nested enclave results in a severity 3 condition being generated.

z/OS UNIX considerations

The following restrictions must be considered when running with POSIX(OFF) or POSIX(ON):

- In Language Environment a process can have only one enclave that is running with POSIX(ON), and that enclave must be the first enclave if that process contains multiple enclaves. All nested enclaves must be enclaves with POSIX(OFF).
- C `exec()` can only be issued from a single-thread enclave.

Any violations of the above restrictions result in a severity 3 condition being generated.

AMODE considerations

In a non-CICS environment ALL31 should have the same setting for all enclaves within a process. You cannot invoke a nested enclave that requires ALL31(OFF) from an enclave running with ALL31(ON).

Part 6. Appendixes

© Copyright IBM Corp. 1991, 2015

Appendix A. Prelinking an application

This topic describes how to prelink your programs under Language Environment. Unless otherwise indicated, the prelinking process applies to C, C++, COBOL and Enterprise PL/I for z/OS.

The Language Environment prelinker performs mapping of names, manages writable static areas, collects initialization information, and combines the object modules that form an application into a single object module that can be link-edited or loaded for execution.

Note:

The prelink step in creating an executable program can be eliminated. The binder is able to directly receive the output of the C, C++, COBOL, and Enterprise PL/I for z/OS compilers, thus eliminating the requirement for the prelink step. The advantage of using the binder is that the resulting executable program is fully rebindable.

IBM intends to stabilize the prelinker. The prelinker was designed to process long names and support constructed reentrancy in earlier versions of the C, C++, COBOL, and PL/I compilers, and the Language Environment-conforming assembler, on the MVS and OS/390 operating systems. The prelinker provides output that is compatible with the linkage editor, shipped with the program management binder.

The program management binder is designed to include the function of the prelinker, the linkage editor, the loader, and a number of APIs to manipulate the program object. Its functionality delivers a high level of compatibility with the prelinker and linkage editor, but provides additional functionality in some areas.

Further enhancements will not be made to the prelinker utility. Enhancements will be made only to the program management binder, to position the program management binder as the strategic tool for program object manipulation.

For information on how to use the binder, see *z/OS MVS Program Management: User's Guide and Reference* and *z/OS MVS Program Management: Advanced Facilities*.

For information on how to build and use DLLs, see Chapter 4, "Building and using dynamic link libraries (DLLs)," on page 43.

Which programs need to be prelinked

The prelink step is required when an executable program is to reside in a PDS, or if it utilizes the system programming facilities of C. When the executable is to reside in a PDSE or HFS, the prelink step may be eliminated since the binder can handle the output of the C, C++, COBOL, and Enterprise PL/I for z/OS compilers. If the link-edit process is performed by the linkage editor then the prelink step is required.

You should not use the pre-linker with XPLINK programs because XPLINK programs require the GOFF binder format and GOFF is not supported by the

© Copyright IBM Corp. 1991, 2015

pre-linker. Also, the z/OS XL C/C++ compiler creates GOFF object code when the XPLINK compiler option is specified. When bound, the objects must reside in PDSEs or the HFS.

The following list identifies programs which may need to be prelinked before the link-edit step of creating an executable program.

- Modules which must be processed with the linkage editor rather than the binder
- Modules which must be stored in a PDS rather than in a PDSE
- Programs which utilize the system programming facilities of C.
- Non-XPLINK C programs compiled with any of the following compiler options:
  - RENT
  - LONGNAME
  - DLL
- Non-XPLINK C++ programs
- COBOL programs compiled with any of the following compiler options:
  - DLL
  - PGMNAME(LONGMIXED)
  - PGMNAME(LONGUPPER)
- COBOL programs that use object-oriented extensions
- COBOL programs containing class definitions or the INVOKE statement
- Enterprise PL/I for z/OS programs
- Programs compiled to run under z/OS UNIX

Only C object modules that do not refer to writable static, do not contain the LONGNAME option, and do not contain DLL code can be processed by the linkage editor. You do not need to prelink naturally reentrant programs. For more information, see "Making your C/C++ program reentrant" on page 141.

If you need to link-edit together object modules and load modules, prelink the object modules through the prelinker in a single step, and then link-edit with the load modules in a separate link-edit step. This is because the prelinking process can only process object modules.

What the prelinker does

The prelinker performs the following functions:

- Collects information for runtime initialization, including data initialization for C/C++, constructor/destructor calls for static objects in C++, and DLL initialization information.
- For C object modules compiled with RENT, C++ programs, Enterprise PL/I for z/OS programs, or COBOL programs with OO extensions, the prelinker:
  - Combines writable static initialization information
  - Assigns relative offsets to objects in writable static storage
  - Removes writable static name and relocation information
- For programs containing longnames, such as C programs compiled with LONGNAME, C++ programs, Enterprise PL/I for z/OS programs, and COBOL programs compiled with PGMNAME(LONGMIXED) or PGMNAME(LONGUPPER), the prelinker maps LONGNAME option to SHORTNAME option on output.
- For programs that use DLLs, the prelinker:
  - Generates a function descriptor in writable static for each DLL referenced function
  - Generates a variable descriptor for each DLL referenced variable

- Generates an IMPORT control statement for each exported function and variable
- Generates internal information for the load module that describes symbols that are exported to and imported from other load modules
- Combines static DLL initialization information
- Uses longnames to resolve exported and imported symbols

Prelinking process

Input to the prelinker includes the following:

- Primary input: those data sets and DLL definition side-decks that are allocated to SYSIN. If you are creating an application that imports symbols from DLLs, you must provide the definition side-deck for each DLL in SYSIN.
- Secondary input: input processed from SYSLIB, which contains object module libraries used for automatic library calls.
- Input specified in one or more INCLUDE control statements processed as primary and secondary input.

  An attempt is made to read the DD or member of the DD (whichever is specified). This request is resolved if the read is successful.

If you are exporting symbols, the prelinker creates a definition side-deck. After the prelinker processes all its input, it puts the prelinked output object module into SYSMOD. If a definition side-deck was generated, it is put into SYSDEFSD and is a sequential data set or a PDS member. The linking process then begins when the linkage editor takes its primary input from SYSLIN, which refers to the prelinked object module data set.

The IBM-supplied cataloged procedures and REXX EXECs for C/C++ use the DLL versions of the IBM-supplied class libraries by default; the IBM-supplied class libraries definition side-deck data set, SCLBSID, is included in the SYSIN concatenation.

If you are *statically* linking the relevant C/C++ class library object code, you must:

- Override the PLKED.SYSLIB concatenation to include the SCLBCPP data set, and
- Override the PLKED.SYSIN concatenation to exclude the SCLBSID data set.

Figure 109 on page 542 shows an overview of the basic prelinking process.

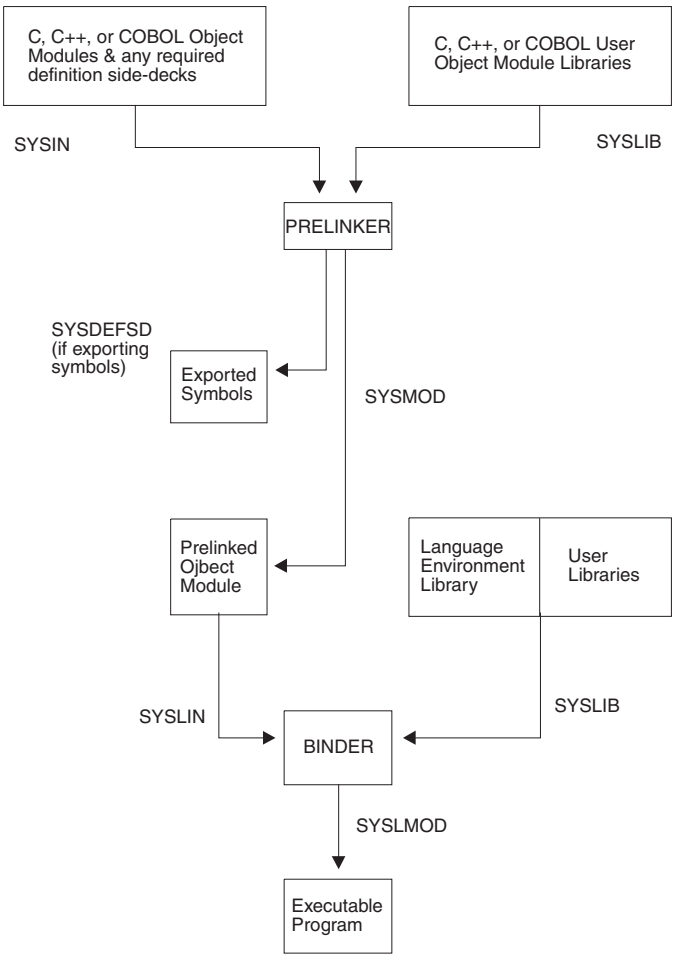

Figure 109. Basic prelinker and linkage editor processing

References to currently unresolved symbols (unresolved external references)

If, during the automatic library call, a symbol is not the name of an existing member of an object data set, the symbol can subsequently be defined if a function or variable with the same name is encountered. Unresolved requests generate error or warning messages to the prelinker map.

Writable static references that are not resolved by the prelinker cannot be resolved later. Only the prelinker can be used to resolve writable static. The output object module of the prelinker should not be used as input to another prelink.

If you are building an application that imports symbols from a DLL, you *must* include the definition side-deck produced by the prelinker when the DLL was built as input to the prelink step of your application.

If the symbol is an L-name that was not resolved by automatic library call and for which a RENAME statement with the SEARCH option exists, the symbol is

resolved under the S-name on the RENAME statement by automatic library call. See "RENAME control statement" on page 548 for a complete description of the RENAME control statement.

Unresolved references or undefined writable static objects often result if the prelinker is given input object modules produced with a mixture of RENT/NORENT or LONGNAME/NOLONGNAME or DLL options. For more information on avoiding unresolved references in a DLL or in an application that imports symbols from a DLL, see *z/OS XL C/C++ User's Guide*.

Processing the prelinker automatic library call

The following hierarchy is used to resolve a referenced and currently undefined symbol. In all cases, the symbol is only defined if it is contained in the input from this process or in other future input:

- The undefined name is an S-name, for example `SNAME`.

  If the NONCAL command option is in effect, the partitioned data sets concatenated to SYSLIB are searched in order as follows:

  – If the data set contains a C370LIB-directory created using the Object Library Utility, and the C370LIB-directory shows that a defined symbol by that name exists, the member of the PDS containing that symbol is read.

  – If the data set does not contain a C370LIB-directory created using the Object Library Utility and the reference is not to static external data, the member or alias, with the same name as `SNAME`, is read.

- The undefined name is an L-name.

  If the NONCAL command option is in effect, the partitioned data sets concatenated to SYSLIB are searched. If the data set contains a C370LIB-directory created using the Object Library Utility, and the C370LIB-directory shows that a defined symbol by that name exists, the member of the PDS indicated as containing that symbol is read.

For more information about the Object Library Utility, see *z/OS XL C/C++ User's Guide* or Appendix E, "Object library utility," on page 573.

Language Environment prelinker map

The Language Environment prelinker produces a listing file called the prelinker map when you use the MAP prelinker option (which is the default). As the following example shows, the prelinker map contains several individual sections that are only generated if they are applicable.

```
=======================================================================
|                           Prelinker Map                  1          |
|                                                                     |
| CPLINK:5647A01 V2 R9 M00 IBM Language Environment 2000/01/20 13:45:16|
=======================================================================

Command Options. . . . . : NONCAL   NOMEMORY ER       DUP      MAP
                         : NOOMVS   NOUPCASE DYNAM


=======================================================================
|                      Object Resolution Warnings            2        |
=======================================================================

WARNING EDC4015: Unresolved references are detected:
CEESTART @@TRGLOR CEESG003
```

```
=======================================================================
|                              File Map                    3          |
=======================================================================

*ORIGIN  FILE ID  FILE NAME

   P      00001   DD:SYSIN
   IN     00002   *** DESCRIPTORS ***

*ORIGIN:  P=primary input     PI=primary INCLUDE    SI=secondary INCLUDE
          A=automatic call     R=RENAME card         L=C Library
         IN=internal


=======================================================================
|                        Writable Static Map               4          |
=======================================================================

  OFFSET    LENGTH  FILE ID  INPUT NAME

       0         4   00001   this_int_is_in_writable_static
       8        10   00002   <year>


=======================================================================
|                          Load Module Map                 5          |
=======================================================================

MODULE ID  MODULE NAME

  00001    EXPONLY


=======================================================================
|                         Import Symbol Map                6          |
=======================================================================

*TYPE    FILE ID  MODULE ID  NAME

   D      00001     00001    year

*TYPE:  D=imported data  C=imported code
=======================================================================
|                         Export Symbol Map                7          |
=======================================================================

*TYPE    FILE ID  NAME

   C      00001   get_year
   C      00001   next_year
   D      00001   this_int_is_in_writable_static
   C      00001   Name_Collision_In_First_Eight
   C      00001   Name_Collision_In_First8

*TYPE:  D=exported data  C=exported code


=======================================================================
|                 ESD Map of Defined and Long Names         8          |
=======================================================================

                  OUTPUT
*REASON  FILE ID  ESD NAME   INPUT NAME

   P              CEESTART   CEESTART
   D      00001   @ST00002   Name_Collision_In_First_Eight
   D      00001   @ST00001   Name_Collision_In_First8
```

```
   D      00001   NEXT@YEA   next_year
   D      00001   GET@YEAR   get_year
   D      00001   THIS@INT   this_int_not_in_writable_static
   P              @@TRGLOR   @@TRGLOR
   P              CEESG003   CEESG003

*REASON: P=#pragma or reserved    S=matches short name    R=RENAME card
         L=C Library              U=UPCASE option         D=Default


============  E N D   O F   P R E - L I N K A G E   M A P  =============
```

The numbers in the following text correspond to the numbers shown in the map.

1 Heading

The heading is always generated and contains the product number, the library release number, the library version number, the date and the time the prelink step began, followed by a list of the prelinker options in effect for the step.

2 Object Resolution Warnings

This section is generated if objects remained undefined at the end of the prelink step or if duplicate objects were detected during the step. The names of the applicable objects are listed.

3 File Map

This section lists the object modules that were included in input. An object module consisting only of RENAME control statements, for example, is *not* shown. Also provided in this section are source origin (`*ORIGIN`), name (`FILE NAME`), and identifier (`FILE ID`) information. `*ORIGIN` indicates that the object module came from primary input because of:

- An INCLUDE control statement in primary or secondary input.
- A RENAME control statement.
- The resolution of L-name library references.
- The object module was internal and self-generated by the prelink step.

The `FILE ID` can be found in other sections and is used as a cross-reference to the object module.

The `FILE NAME` can be either the data set name and, if applicable, the member name, or the ddname and, if applicable, the member name.

If you are prelinking an application that imports variables or functions from a DLL, the variable descriptors and function descriptors are defined in a file called `*** DESCRIPTORS ***`. This file has an origin of internal.

4 Writable Static Map

This section is generated if an object module was encountered that contains defined static external data. This area also contains variable descriptors for any imported variables and, if required, function descriptors. This section lists the names of such objects, their lengths, their relative offset within the writable static area, and a `FILE ID` for the file containing the object's definition.

Imported variables and DLL-referenced functions have angular brackets (<>) around their names in this section.

5 Load Module Map

This section is generated if the application imports symbols from other load modules. This section lists the names of the load modules.

6 Import Symbol Map

This section lists the symbols that are imported from other load modules.

These otherwise unresolved DLL references are resolved through IMPORT control statements. It describes the type of symbol, that is, `D` (variable) or `C` (function). It also lists the file ID of the object module containing the corresponding IMPORT control statements, the module ID of the load module on that control statement, and the symbol name.

A DLL application would generate this section.

7 Export Symbol Map

This section lists the symbols generated by an object module that exports symbols. It describes the type of symbol, that is, `D` (variable) or `C` (function). It also lists the file ID of the object where the symbol is defined and the symbol name. Only externally defined data objects in writable static or externally defined functions can be exported.

Code that is compiled with the C, C++, or COBOL EXPORTALL compiler option or C/C++ code containing the `#pragma export` directive generates an object module that exports symbols.

Note: The export symbol map will NOT be produced if the NODYNAM option is in effect.

8 ESD Map of Defined and Longnames

This section lists the names of external symbols that are not in writable static. It also shows a mapping of input L-names to output S-names.

If the object is defined, the `FILE ID` indicates the file that contains the definition. Otherwise, this field is left blank. For any name, the input name and output S-name are listed. If the input name is an L-name, the rule used to map the L-name to the S-name is applied. If the name is not an L-name, this field is left blank.

Control statement processing

The only control statements processed by the prelinker are IMPORT, INCLUDE, LIBRARY, and RENAME. The remaining control statements are left unchanged until the link-edit step.

The control statements can be placed in the input stream or stored in a permanent data set.

Note: If you cannot fit all of the information on one control statement, you can use one or more continuations. The L-name, for example, can be split across more than one statement. Continuations are enabled by placing a nonblank character in column 72 of the statement that is to be continued. They must begin in column 16 of the next statement.

IMPORT control statement

The prelinker processes IMPORT statements, but does not pass them on to the link step. The IMPORT control statement has the following syntax:

Syntax

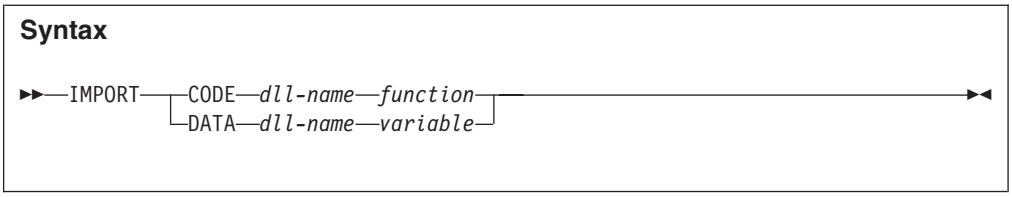

dll-name
The name or alias of the load module for the DLL. The maximum length of an alias is 8 characters. The *dll-name* can also be a z/OS UNIX name; it must be enclosed in apostrophes if special characters, such as apostrophes or blanks, appear in the *dll-name*.

variable
An exported variable name; it is a mixed-case longname. Use a nonblank character in column 72 of the card to indicate a continuation and begin the next line in column 16.

function
An exported function name; it is a mixed-case longname. Use a nonblank character in column 72 of the card to indicate a continuation and begin the next line in column 16.

INCLUDE control statement

The INCLUDE control statement has the following syntax:

Syntax

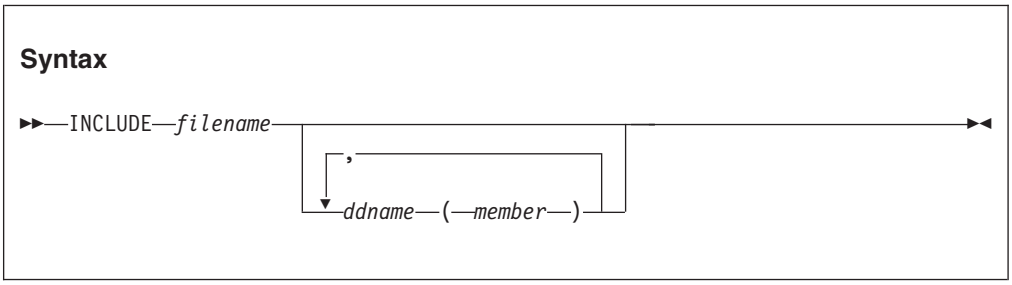

filename
The name of the file to be included.

ddname
A ddname associated with a file to be included.

member
The member of the DD to be included.

The prelinker processes INCLUDE statements like the DFSMS linkage editor does with the following exceptions:

- INCLUDEs of identical member names are not allowed.
- INCLUDEs of both a ddname and a member from the same ddname are not allowed. The prelinker ignores the second INCLUDE.

LIBRARY control statement

The LIBRARY control statement has the following syntax:

Syntax

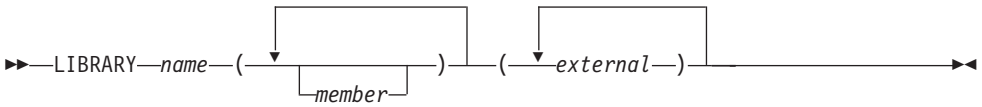

name
The ddname defining a library. The ddname can point to an archive file in the z/OS UNIX file system if the OE option is specified, or a PDS object library. The PDS object library can be a concatenation of one or more libraries created with or without the Object Library Utility.

member
The name or alias of a member of the specified library. Because both S-names and L-names can be specified, case distinction is significant.

Automatic library calls search the library and each subsequent library in the concatenation, if necessary, for the name instead of searching the primary input.

If you specify the OMVS or OE prelinker option, the only form of the LIBRARY card accepted by the prelinker is LIBRARY *ddname*, which specifies a library to search immediately for autocall.

external
An external reference that could be unresolved after primary input processing. This external reference will not be resolved by an automatic library call. Because both S-names and L-names can be specified, case distinction is significant.

The LIBRARY control statement is removed and not placed in the prelinker output object module; the system linkage editor does not see the LIBRARY control statement.

RENAME control statement

The RENAME control statement has the following syntax:

Syntax

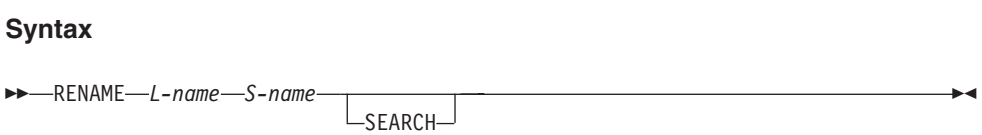

L-name
The name of the input L-name to be renamed on output. All occurrences of this L-name are renamed.

S-name
The name of the output S-name to which the L-name will be changed. This name can be at most 8 characters and case is respected.

SEARCH
An optional parameter specifying that if the S-name is undefined, the prelinker searches by an automatic library call for the definition of the S-name. SEARCH is not supported under z/OS UNIX.

The RENAME control statement is processed by the prelinker and can be used for several purposes:

- To explicitly override the default name given to an L-name when an L-name is mapped to an S-name.

  You can explicitly control the names presented to the system linkage editor so that external variable and function names are consistent from one linkage editor run to the next. This consistency makes it easier to recognize control section and label names that appear in system dumps and linkage editor listings. Another mapping rule (described in "Mapping L-Names to S-Names") can provide the suitable name, but if you need to replace the linkage editor control section, you need to maintain consistent names.
- To explicitly bind an L-name to an S-name. This binding might be necessary when communicating with objects from other language and assembler processors, because these processors generate only S-names.
- A RENAME control statement cannot be used to rename a writable static object because its name is not contained in the output from the prelinker.

RENAME control statements can be placed before, between, or after other control statements or object modules. An object module can contain only RENAME statements. Also, RENAME statements can be placed in input that is included because of other RENAME statements.

Usage notes

- A RENAME statement is ignored if the L-name is not encountered in the input.
- A RENAME statement for an L-name is valid provided *all* of the following are true:
  - The L-name was not already mapped because of a rule that preceded the RENAME statement rule in the hierarchy described in "Mapping L-Names to S-Names."
  - The L-name was not already mapped because of a previous valid RENAME statement for the L-name.
  - The S-name is not itself an L-name. This rule holds true even if the S-name has its own RENAME statement.
  - A previous valid RENAME statement did not rename another L-name to the same S-name.
  - Either the L-name or the S-name is not defined. Either the L-name or the S-name can be defined, but not both. This rule holds true even if the S-name has its own RENAME statement.

Mapping L-Names to S-Names

The output object module of the prelinker can be used as input to a system linkage editor.

Because system linkage editors accept only S-names, the Language Environment prelinker maps L-names to S-names on output. S-names are not changed. L-names can be up to 160 (COBOL for OS/390 & VM and COBOL for MVS & VM), 255

(z/OS XL C/C++), or 1024 (z/OS XL C++) characters in length; truncation of the L-names to the 8-character S-name limit is therefore not sufficient because collisions can occur.

The Language Environment prelinker maps a given L-name to a S-name according to the following hierarchy:

1. **C/C++ only:** If any occurrence of the L-name is a reserved runtime name, or was caused by a `#pragma map` or `#pragma CSECT` directive, then that same name is chosen for all occurrences of the name. This name must not be changed, even if a RENAME control statement for the name exists. For information on the RENAME control statement, see "RENAME control statement" on page 548.
2. If the L-name was found to have a corresponding S-name, the same name is chosen. For example, `DOTOTALS` is coded in both a C and assembler program. This name must not be changed, even if a RENAME statement for the name exists. This rule binds the L-name to its S-name.
3. If a valid RENAME statement for the L-name is present, the S-name specified on the RENAME statement is chosen.
4. If the name corresponds to a Language Environment function or library object for which you did not supply a replacement, the name chosen is the truncated, uppercased version of the L-name library name (with _ mapped to @).

   The S-name is not chosen, if either:

   - A valid RENAME statement renames another L-name to this S-name. For example, the RENAME statement `RENAME mybigname PRINTF` would make the library `printf()` function unavailable if `mybigname` is found in input.
   - Another L-name is found to have the same name as the S-name. For example, explicitly coding and referencing `SPRINTF` in the C source program would make the library `sprintf()` function unavailable.

   Avoid such practices to ensure that the appropriate Language Environment function is chosen.
5. If the UPCASE option is specified, names that are 8 characters or fewer are changed to uppercase (with _ mapped to @). Names that begin with `IBM` or `CEE` will be changed to `IB$`, and `CE$`, respectively. Because of this rule, two different names can map to the same name. You should therefore use the UPCASE option carefully. A warning message is issued if a collision is found, but the names are still mapped.
6. If none of the above rules apply, a default mapping is performed. This mapping is the same as the one the compiler option NOLONGNAME uses for external names, taking collisions into account. That is, the name is truncated to 8 characters and changed to uppercase (with _ mapped to @). Names that begin with `IBM` or `CEE` will be changed to `IB$` and `CE$`, respectively. If this name is the same as the original name, it is always chosen. This name is also chosen if a name collision does not occur. A name collision occurs if either

   - The S-name has already been seen in **any** input, that is, the name is not new.
   - After applying this default mapping, the same name is generated for at least two, previously unmapped, names.

   If a collision occurs, a unique name is generated for the output name. For example, the name `@ST00033` is manufactured.

z/OS XL C/C++: A program that is compiled with the NOLONGNAME compiler option and link-edited, except for collisions, library renames, and user renames, presents the linkage editor with the same names as when the program is compiled with the LONGNAME option and processed by the prelinker.

Starting the Prelinker under batch and TSO/E

The following topics describe how to start the prelinker under batch and TSO/E. For more information about prelinking z/OS XL C++ applications under batch, see *z/OS XL C/C++ User's Guide*.

Under batch

The prelinker is invoked by the following cataloged procedures:

CBCCL
C++ compile, prelink, and link

CBCCLG
C++ compile, prelink, link, and run

CBCL C++ prelink and link

CBCLG
C++ prelink, link, and run

EDCPL
C prelink and link

EDCCPLG
C compile, prelink, link, and run.

IGYWCPL
COBOL compile, prelink, link, and run

IGYWPL
COBOL prelink and link

IGYWCPG
COBOL compile, prelink, load, and run

IBMZCPG
Enterprise PL/I for z/OS compile, prelink, and load/run using the loader

IBMZCPL
Enterprise PL/I for z/OS compile, prelink, and link

IBMZCPLG
Enterprise PL/I for z/OS compile, prelink, link, and run

For more information about using these procedures, see *z/OS XL C/C++ User's Guide*, the appropriate version of the COBOL programming guide in the COBOL library at Enterprise COBOL for z/OS library (http://www-01.ibm.com/support/docview.wss?uid=swg27036733), or *Enterprise PL/I for z/OS Programming Guide*.

Under TSO/E

The Language Environment prelinker is started under TSO/E through an IBM-supplied CLIST called CPLINK, which invokes the prelinker and creates an executable module. If you want to create a reentrant C/C++ load module, link-edit C/C++ or COBOL object modules using long names, or create a DLL application, you must use CPLINK instead of the TSO/E LINK command.

The CPLINK command has the following syntax:

Syntax

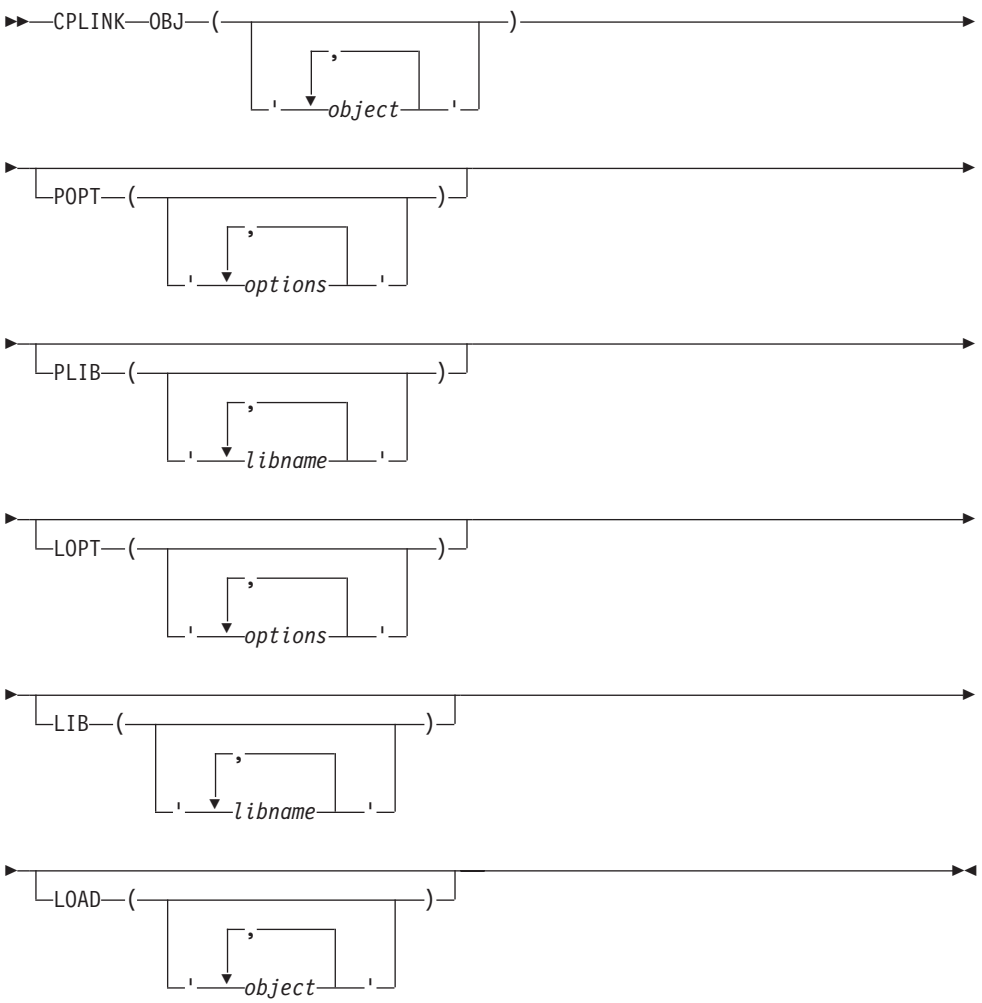

OBJ

Specifies an input data set name. This is a required parameter. Each input data set must be one of the following:

- A C object module compiled with the RENT or LONGNAME compiler options
- A C object module that has no static external data
- A COBOL object module

POPT

Specifies a string of prelink options. The prelinker options available for CPLINK are the same as for batch. For example, if you want the MAP option to be used by the prelinker, specify the following:

```
CPLINK OBJ('dsname') POPT('MAP')...
```

When the prelink MAP option is specified (as opposed to the link option MAP), the prelinker produces a file showing the mapping of static external data. This map shows name, length, and address information. Any unresolved references or duplicate symbols during the prelink step are displayed in the map.

PLIB
Specifies the library names used by the prelinker for the automatic library call facility.

LOPT
Specifies a string of linkage editor options. For example, if you want the prelink utility to use the MAP option and the linkage editor to use the NOMAP option, use the following CLIST command:

```
CPLINK OBJ('dsname') POPT('MAP') LOPT('NOMAP...')
```

LIB
Specifies any additional library or libraries used by the TSO/E LINK command to resolve external references. These libraries are appended to the default language library functions.

LOAD
Specifies an output data set name. If you do not specify an output data set name, a name is generated for you. The name generated by the CLIST consists of your user prefix followed by `CPOBJ.LOAD(TEMPNAME)`.

Examples

In the following example, your user prefix is `RYAN`, and the data set containing the input object module is a partitioned data set called `RYAN.C.OBJ(INCCOMM)`. This example will generate a prelink listing without using the automatic call library. After the call, the load module is placed in a partitioned data set called `RYAN.CPOBJ.LOAD(TEMPNAME)` and the prelink listing is placed in a sequential data set called `RYAN.CPOBJ.RMAP`.

```
CPLINK OBJ('C.OBJ(INCCOMM)')
```

In the following examples, assume that your user prefix is `DAVE`, and the data set containing the input object module is a partitioned data set called `DAVE.C.OBJ(INCPYRL)`. This example will not generate a prelink listing, and the automatic call facility will use the library `HOOVER.LIB.SUB`. The load module is placed in the partitioned data set `DAVE.TBD.LOAD(MOD)`.

```
//*-------------------------------------------------------
//* Prelink and link 'DAVE.C.OBJ(INCPYRL)'
//*-------------------------------------------------------
//P0014001  EXEC EDCPL,
//          INFILE='DAVE.C.OBJ(INCPYRL)',
//          OUTFILE='DAVE.TBD.LOAD(MOD),DISP=SHR',
//          PPARM='NOMAP,NONCAL',
//          PLIB='HOOVER.LIB.SUB',
//          LPARM='AMODE(31),RMODE(ANY) '
//*-------------------------------------------------------
```

Figure 110. Example of prelinking under batch

```
CPLINK OBJ('''DAVE.C.OBJ(INCPYRL)''')
      POPT('NOMAP,NONCAL')
      PLIB('''HOOVER.LIB.SUB''')
      LOAD('TBD.LOAD(MOD)')
```

Figure 111. Example of prelinking under TSO/E

Using the CXXBIND EXEC under TSO/E

For a description of using the CXXBIND EXEC to build a C++ executable program without using the prelink step, see *z/OS XL C/C++ User's Guide*.

Using the CXXMOD EXEC under TSO/E

This topic describes how to prelink and link your C++ or COBOL program by invoking the CXXMOD EXEC. This exec creates an executable module. The syntax for the CXXMOD EXEC is:

Syntax

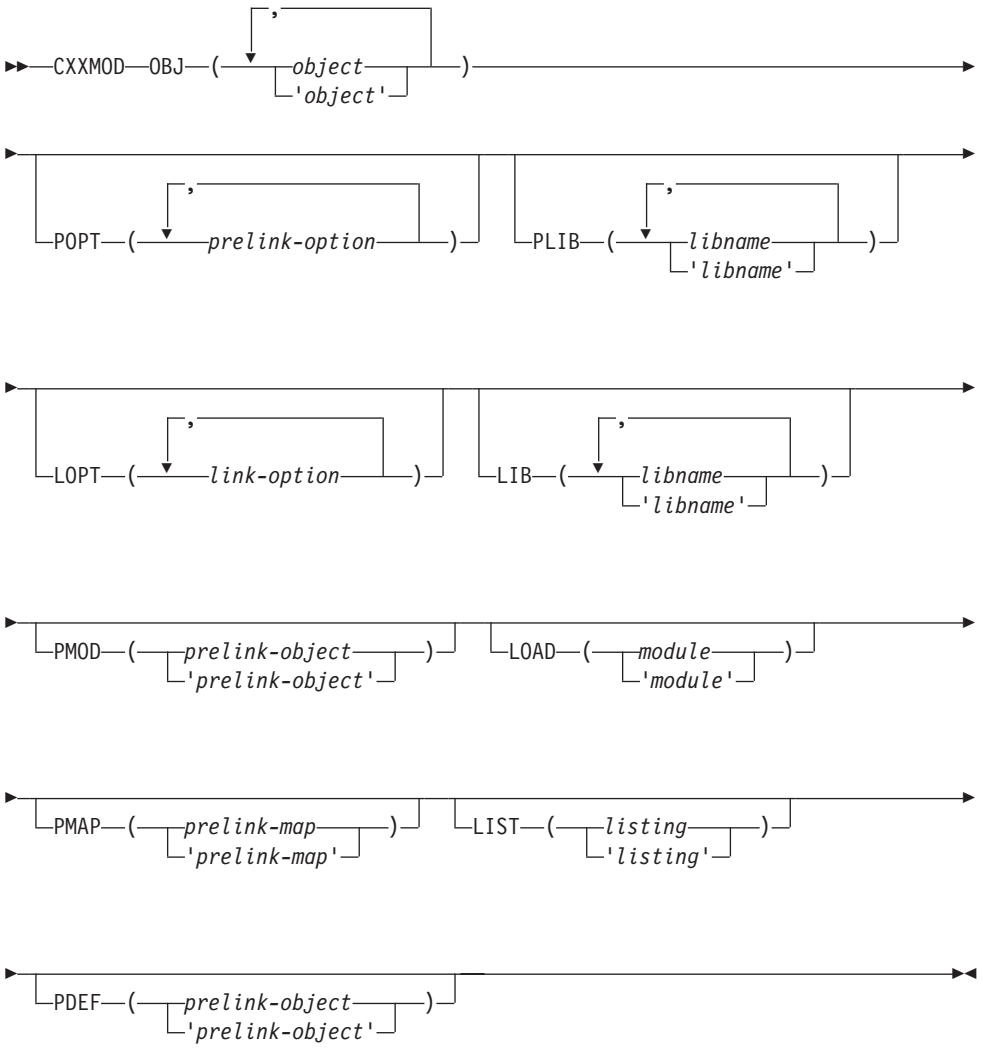

OBJ You must always specify the input data set names on the OBJ keyword parameter. Each input data set must be a C/C++, COBOL, or assembler object module.

If the high-level qualifier of an object data set is not the same as your user prefix, you must use the fully qualified name of the data set and place single quotation marks around the entire name.

POPT Prelinker options can be specified using the POPT keyword parameter. If the MAP prelink option is specified, a prelink map will be written to the data set specified under the PMAP keyword parameter. For more details on generating a prelink map, see the description of the PMAP option.

LOPT Linkage editor options can be specified using the LOPT keyword parameter. For details on how to generate a linkage editor listing, see the option LIST.

PLIB The library names that are to be used by the automatic call library facility of the prelinker must be specified on the PLIB keyword parameter. The default library used is the C++ base library, CEE.SCEECPP.

The default library names are not added if library names are specified with the PLIB keyword parameter.

If the high-level qualifier of a library data set is not the same as your user prefix, you must use the fully qualified name of the data set and place single quotation marks around the entire name.

LIB If you want to specify libraries for the link-edit step to resolve external references, use the LIB keyword parameter. The default library used is the Language Environment library, CEE.SCEELKED.

The default library names are *not* added if library names are specified with the LIB keyword parameter.

If the high-level qualifier of a library data set is not the same as your user prefix, you must use the fully qualified name of the data set and place single quotation marks around the entire name.

PMOD

If you want to keep the output prelinked object module, specify the data set it should be placed in using the PMOD keyword parameter. The default action is to create a temporary data set and erase it after the link-edit is complete.

If the high-level qualifier of the output prelinked object module is not the same as your user prefix, you must use the fully qualified name of the data set and place single quotation marks around the entire name.

LOAD

To specify where the resultant load module should be placed, use the LOAD keyword parameter.

If the high-level qualifier of the load module is not the same as your user prefix, you must use the fully qualified name of the data set and place single quotation marks around the entire name.

LIST To specify where the linkage editor listing should be placed, use the LIST keyword parameter.

If the high-level qualifier of the linkage editor listing is not the same as your user prefix, you must use the fully qualified name of the data set and place single quotation marks around the entire name.

PMAP To specify where the prelinker map should be placed, use the PMAP keyword parameter.

If the high-level qualifier of the prelinker map is not the same as your user prefix, you must use the fully qualified name of the data set and place single quotation marks around the entire name.

PDEF To specify where the generated IMPORT control statements should be placed by the prelinker.

If the high-level qualifier of the prelinker map is not the same as your user prefix, you must use the fully qualified name of the data set and place single quotation marks around the entire name.

Prelinker options

The following table describes the Language Environment prelinker options.

Table 87. Prelinker options

Option	Description
DLLNAME(*dll-name*)	DLLNAME specifies the DLL name that appears on generated IMPORT control statements. If you specify the DLLNAME option, the DLL name is set to the value listed on the option. If you do not specify DLLNAME, the DLL name is set to the name that appeared on the last NAME control statement that was processed. If there are no NAME control statements, and the output object module of the prelinker is a PDS member, the DLL name is set to the name of that member. Otherwise the DLL name is set to the value TEMPNAME, and the prelinker issues a warning.
DUP | **NODUP**	DUP specifies that if duplicate symbols are detected, the symbol names should be directed to `stdout`, and the return code minimally set to a warning level of 4. NODUP does not affect the return code setting when duplicates are detected.
DYNAM | **NODYNAM**	When NODYNAM option is in effect, export symbol processing is not performed by the Prelinker, even when export symbols are present in the input objects. The side deck is not created and the resulting module will not be a DLL. Specify NODYNAM for prelinked C/C++ programs involved in COBOL C/C++ ILC calls.
ER | **NOER**	ER specifies that if there are unresolved references, a message and list of unresolved symbols are written to the console. For unresolved references, the return code is minimally set to warning level 4. For unresolved writable static references, the return code is minimally set to error level 8. NOER specifies that a list of unresolved symbols is not written to the console. For unresolved references, the return code is unaffected. For unresolved writable static references, the return code is minimally set to warning level 4.
MAP | **NOMAP**	The MAP option specifies that the prelinker should generate a prelink listing. See "Language Environment prelinker map" on page 543 for a description of the map.
MEMORY | **NOMEMORY**	The MEMORY option specifies that the prelinker will buffer (retain in storage), for the duration of the prelink step, those object modules that are read and processed. The MEMORY option is used to increase prelinker speed. To use this option, however, additional memory may be required. If you use this option and the prelink fails due to a storage error, you must increase your storage size or use the prelinker without the MEMORY option.

Table 87. Prelinker options (continued)

Option	Description
NCAL | **NONCAL**	The NCAL option specifies that the prelinker should not use automatic library call to resolve unresolved references. NONCAL specifies that an automatic library call is performed, which applies to a library of user routines. The data set must be partitioned and must contain object modules. An automatic library call cannot apply to a library containing load modules. **C++ only:** If you are prelinking C++ object modules, you must use the NONCAL option and include the CEE.SCEECPP data set in your SYSLIB concatenation.
OE | **NOOE**	The OE option causes the prelinker to change its processing of INCLUDE and LIBRARY control statements. OE causes the prelinker to accept z/OS UNIX or BFS files and data set names on INCLUDE and LIBRARY statements.
OMVS | **NOOMVS**	The OMVS option causes the prelinker to change its processing of INCLUDE and LIBRARY control statements. OMVS causes the prelinker to accept files and data set names on INCLUDE and LIBRARY statements. The OMVS option is a synonym for the OE option. Use of the OE option is preferred.
UPCASE | **NOUPCASE**	The UPCASE option enforces the uppercase mapping of those L-names that are 8 characters or fewer and have not been explicitly mapped by another mechanism. These L-names will be uppercased (with _ mapped to @), and names that begin with `IBM` or `CEE` will be changed to `IB$` and `CE$`, respectively. The UPCASE option is useful when calling routines written in languages other than C. For example, PL/I and assembler each uppercases all of its external names. So, if the names are coded in lowercase in the C program and the LONGNAME option is used, the names will not match by default. The UPCASE option can be used to enforce this matching. The RENAME control statement can also be used for this purpose.

Appendix B. EXEC DLI and CALL IMS Interfaces

There are two major approaches to accessing DL/I databases on IMS. This topic describes the interfaces that are supported in the various environments, specifically IMS and CICS.

- EXEC DLI approach
- CALL IMS approach, which includes interfaces, such as: PLITDLI, CBLTDLI, and CTDLI.

Either an IMS library or a CICS library should be present when linking an application. If both libraries are available, link-edit errors may occur.

If you are using ILC in CICS DL/I applications, EXEC CICS DLI and CALL xxxTDLI can only be used in programs with the same language as the main program. For details on using ILC under CICS, see the IBM Knowledge Center at http://publib.boulder.ibm.com/infocenter/cicsts/v3r1/index.jsp .

Table 88 lists the IMS and CICS support for various user interfaces to DL/I databases.

Table 88. IMS and CICS support of user interfaces to DL/I databases

User interface	IMS supported	CICS supported
CALL CEETDLI	Yes	No
CALL AIBTDLI	Yes	No
CALL CBLTDLI (COBOL)	Yes	Yes
CALL PLITDLI (PL/I)	Yes	Yes
`ctdli()` (C)	Yes	No
CALL ASMTDLI (non-PL/I)	Yes	Yes
CALL ASMTDLI (PL/I)	Yes	Yes
EXEC DLI (non-C)	Yes	Yes
EXEC DLI (C)	No	Yes

© Copyright IBM Corp. 1991, 2015

Appendix C. Guidelines for writing callable services

If you want to write services similar in form and description to Language Environment callable services, follow the guidelines listed below.

- Callable service parameters must follow the data type descriptions outlined in *z/OS Language Environment Programming Reference*.
- Argument passing is by one level of indirection, either "by reference" or "by value". See "Passing arguments between routines" on page 134 for these argument passing styles.
- Avoid the use of operating system services and macros. Use Language Environment services whenever possible.
- Always use the prototype definition or the entry declaration whenever possible.
- Avoid using the CEE3SPM callable service (see *z/OS Language Environment Programming Reference*). CEE3SPM can change the condition handling semantics of the HLLs supported by Language Environment.
- Language Environment assumes the following defaults for character strings:
  - For input arguments, a length-prefixed string (with the length of the 2-byte prefix not included in the length value)
  - For output arguments, a fixed-length string of 80 bytes, padded on the right with blanks as necessary.
- Allow a feedback code area to be optionally passed as the last parameter to the callable service. The feedback code must be a FEED_BACK data type and conform to the layout described in Chapter 18, "Using condition tokens," on page 271.
- If omitted arguments are permitted by the HLL, a zero or NULL pointer must be used to indicate the omitted parameter in the parameter list that is passed to the callable service. For example:

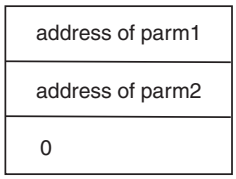

  The last parameter passed in the list must have the high-order bit on to indicate that it is last. If the last parameter is omitted, the zero value that the user passes in the parameter list must have the high-order bit on, for example X'80000000'. Therefore, you must allow the user of the callable service to check for this bit when the last parameter passed to the service is omitted.
- When documenting callable services, follow the same general format used to document each of the callable services in this information. Each callable service description should contain (in this order):
  - A general description of what the service does
  - A diagram indicating the syntax of the call to the service
  - A complete description of each callable service parameter and an identification of the required data type

© Copyright IBM Corp. 1991, 2015

- A list of possible feedback codes that can be returned by the service to its caller
- Usage notes that provide additional needed information to the user, such as a list of related callable services
- An example or examples of usage

Appendix D. Operating system and subsystem parameter list formats

This topic describes the various formats of parameters passed to and from operating systems and subsystems. In most cases, you do not need to know these formats in order to pass or receive parameters in your application. For cases in which you want to directly access the parameter list that is passed, the format and contents of the parameter list are shown later in this section.

There are additional considerations depending on whether the main routine is in the C, C++, COBOL, or PL/I language. For information about parameter passing in these languages, see:
- "C and C++ parameter passing considerations"
- "COBOL parameter passing considerations" on page 569
- "PL/I main procedure parameter passing considerations" on page 571

C and C++ parameter passing considerations

C and C++ generally support a single character string as a parameter to a main routine. They parse the string into tokens that are accessed by the `argc` and `argv` parameters of the main function.

In addition, there are alternate styles of passing a set of parameters to the main routine, for example: as a single value, a pointer to a value, or a pointer to a list of values. In these cases, the set of parameters is not parsed. It is assumed that the invoker of the application (for example, the operating system) has stored the address of the set of parameters in register 1 before entry into the main routine. Depending on how the parameters are passed, register 1 points on entry to the entities illustrated in Figure 112:

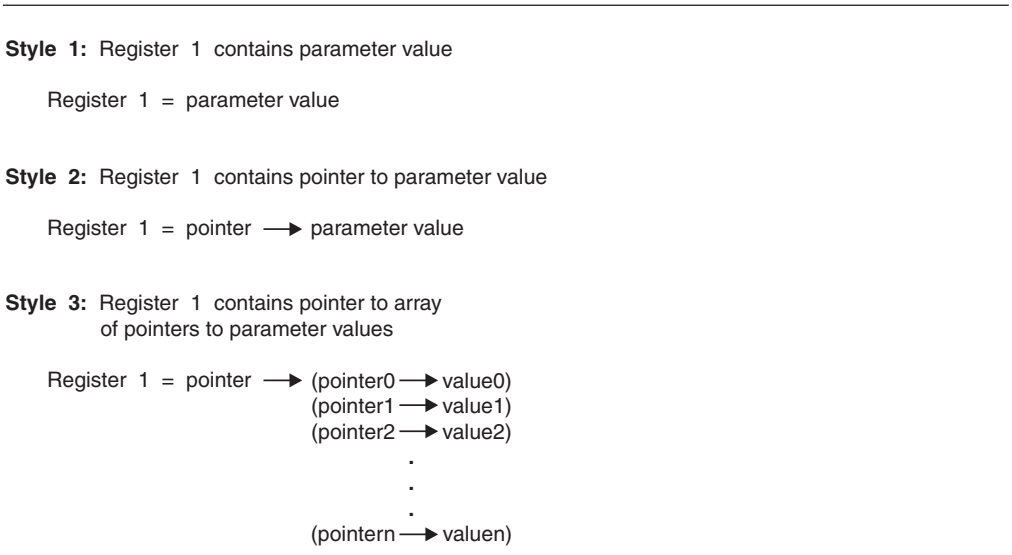

Figure 112. Alternate C/C++ parameter passing styles

The first arrangement in Figure 112 can be used only for parameters that are integers.

© Copyright IBM Corp. 1991, 2015

A C main routine elects to use one of the styles shown in Figure 112 on page 563 by specifying the PLIST(OS) runtime option in `#pragma runopts` (see "C PLIST and EXECOPS Interactions" on page 565); a C++ routine elects to use one of the styles with the PLIST(OS) compiler option (see "C++ PLIST and EXECOPS Interactions" on page 567). The main routine must know which parameter style to expect. When PLIST(OS) is specified, C or C++ makes the parameter list available through a pair of macros; code them in your main routine to determine which parameter list style your routine receives:

__R1 of type `void *`
: __R1 contains the value that is in register 1 on entry into the main routine. It provides access to the parameters when they are passed according to the first two styles shown in Figure 112 on page 563.

__osplist of type `void **`
: `__osplist` acts as an array of pointers to parameters. It is derived from __R1 and provides access to the parameters when they are passed according to the third style shown in Figure 112 on page 563. You must include the header file `stdlib.h` when using `__osplist`.

The third style is also supported for certain macros and functions (for example, `__pcblist` and `__csplist` for invokers IMS and Cross System Product). `__osplist` is a generalization of the more specialized `__pcblist` and `__csplist` macros; it can be used in their place or in cases where they do not apply.

Figure 113 illustrates how these macros can be used to access items in the three alternate parameter arrangements.

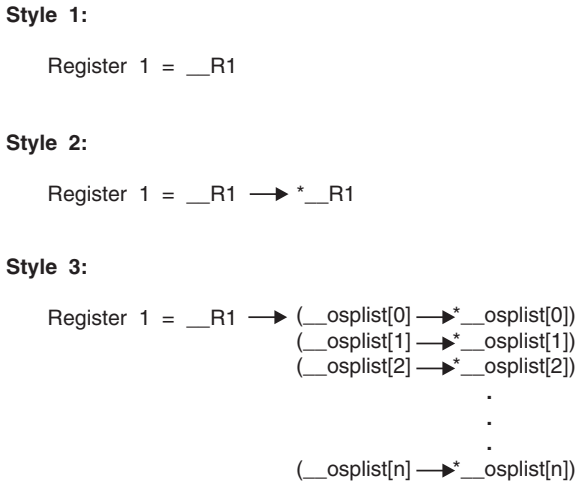

Figure 113. Accessing parameters using macros __R1 and __osplist

Suitable casting and dereferencing are required when using these macros, as shown in Figure 114 on page 565, according to the parameter passing style in use.

Style 1:

```
parm        = (int) __R1;    (restricted to integer types)
```

Style 2:

```
parm_ptr    = (float *) __R1
parm        = * ((float *) __R1);
```

Style 3:

```
parm0_ptr   = (float *) __osplist[0];
parm0       = * ((float *) __osplist[0]);
```

Figure 114. Examples of casting and dereferencing

C PLIST and EXECOPS Interactions

You can use C `#pragma runopts` to specify to the C compiler a list of options to be used at run time. Two of the options of `#pragma runopts` affect the format of the argument list passed to the application on initialization: EXECOPS and PLIST.

EXECOPS allows you to specify runtime options on the command line or in JCL at application invocation. NOEXECOPS indicates that runtime options cannot be so specified. When the EXECOPS runtime option is specified under MVS, Language Environment alters the MVS parameter list format: Language Environment removes any runtime options that are present.

PLIST indicates in what form the invoked routine should expect the argument list. You can specify PLIST with the following values under Language Environment:

HOST The argument list is assumed to be a character string. The string is located differently under various systems as follows:

- Under TSO, if a CPPL is detected, Language Environment gets the string from the command buffer.
- Under TSO, if a CPPL is not detected, Language Environment assumes a halfword-prefixed string in the MVS format.
- Under MVS, Language Environment uses the halfword-prefixed string.

OS The inbound parameter list is assumed to be in an MVS linkage format in which register 1 points to a parameter address list. No runtime options are available. Register 1 is not interrogated by Language Environment.

The PLIST(HOST) setting allows the object to execute under MVS (assuming a halfword-prefixed string), or under TSO (using the CPPL or the MVS-format parameter list). Specify PLIST(HOST) to default to the argument list format for the operating system under which your application is running.

Although Language Environment supports the MVS, IMS, and TSO suboptions of PLIST for compatibility, use of PLIST(HOST) is recommended. There are some exceptions to this guideline:

Preinitialization
PLIST(MVS) is supported for compatibility with pre-Language Environment C preinitialization programs.

CICS If you are running a CICS application compiled under the pre-Language Environment-conforming version of C, PLIST(HOST), the default, is assumed regardless of the actual PLIST setting. If you are running a CICS application compiled with a Language Environment-conforming C compiler, specify PLIST(OS).

TSO TSO command processors that require access to the full CPPL must specify PLIST(OS).

The EXECOPS, NOEXECOPS, and PLIST options can alter the format of the argument list passed to your application, depending on the combination of options specified. The setting of EXECOPS determines whether Language Environment looks for runtime parameters in the inbound parameter list. The effects of the interactions of these options under the various operating systems and subsystems are summarized in Table 89:

Table 89. Interactions of C PLIST and EXECOPS

Operating system	Method of invocation	PLIST suboption	EXCECOPS (default)	arg/argv	__R1/__osplist and PCBs
MVS	EXEC PGM=, PARM= <runtime options> / <user args>	HOST	Yes. <runtime options> honored	argc = number of tokenized args in <user args> argv[0...argc-1] = tokenized args in <user args>	
MVS	EXEC PGM=, PARM= <runtime options> / <user args>	HOST	No. <runtime options> ignored	argc = number of tokenized args in the entire PARM string, that is, <runtime options> / <user args> argv[0...argc-1] = tokenized args in the entire PARM string	
MVS	Assembler calls C module with pre-Language Environment preinitialization PLIST with runtime options specified in the PLIST	MVS	Yes. <runtime options> honored	argc/argv = <argc,argv> structure specified in the preinitialization PLIST	
MVS	Assembler calls C module with pre-Language Environment preinitialization PLIST with runtime options specified in the PLIST	MVS	No. <runtime options> ignored	argc/argv = <argc,argv> structure specified in the preinitialization PLIST	
MVS	Driver link to C main passing noncharacter parameter list	OS	n/a	argc=1 argv[0] = name of C main program module	Access register 1 through __osplist macro as defined in stdlib.h

Table 89. Interactions of C PLIST and EXECOPS (continued)

Operating system	Method of invocation	PLIST suboption	EXECOPS (default)	arg/argv	__R1/__osplist and PCBs
TSO	CALL, LOADGO, execute module on TSO command line passing <runtime options> / <user args>	HOST	Yes. <runtime options> honored	argc = number of tokenized args in <user args> argv[0...argc-1] = tokenized args in <user args>	
TSO	CALL, LOADGO, execute module on TSO command line passing <runtime options> / <user args>	HOST	No. <runtime options> ignored	argc = number of tokenized args in <runtime options> / <user args> argv[0...argc-1] = tokenized args in <user args>	
TSO	CALL	OS	n/a	argc=1 argv[0] = name of module	Access CPPL through __osplist as defined in stdlib.h
IMS	Invoke C main module	OS or IMS Specify ENV(IMS) also.	n/a	argc=1 argv[0] = 0	Access PCBs through C macros as defined in ims.h
CICS	Invoke C main module	n/a	n/a	argc=1 argv[0] = transaction id	

C++ PLIST and EXECOPS Interactions

The EXECOPS compiler option allows you to specify runtime options on the command line or in JCL at application invocation. NOEXECOPS indicates that runtime options cannot be so specified. When the EXECOPS compiler option is specified under MVS, Language Environment alters the MVS parameter list format by removing any runtime options present.

The PLIST compiler option indicates in what form the invoked routine should expect the argument list. You can only specify PLIST with the following value under Language Environment:

OS The inbound parameter list is assumed to be in an MVS linkage format in which register 1 points to a parameter address list. No runtime options are available. Register 1 is not interrogated by Language Environment.

The EXECOPS, NOEXECOPS, and PLIST compiler options can alter the format of the argument list passed to your application, depending on the combination of options specified. The setting of EXECOPS determines whether Language Environment looks for runtime parameters in the inbound parameter list. The effects of the interactions of these options under MVS, TSO, and the various subsystems are summarized in Table 90 on page 568:

Table 90. Interactions of C++ PLIST and EXECOPS (compiler options)

Operating system	Method of invocation	Compiler options	Runtime options honored?	argc/argv	__R1/ __osplist and PCBs
MVS	EXEC PGM=, PARM= <runtime options> / <user args>	EXECOPS (or default)	Yes	argc = number of tokenized args in <user args> argv[0...argc-1] = tokenized args in <user args>	
MVS	EXEC PGM=, PARM= <runtime options> / <user args>	NOEXECOPS	No	argc = number of tokenized args in the entire PARM string, that is, <runtime options> / <user args> argv[0...argc-1] = tokenized args in the entire PARM string	
MVS	Driver link to C++ main passing noncharacter parameter list	PLIST(OS)	n/a	argc=1 argv[0] = name of C++ main program module	Access register 1 through __osplist macro as defined in stdlib.h
TSO	CALL, LOADGO, execute module on TSO command line passing <runtime options> / <user args>	EXECOPS (or default)	Yes	argc = number of tokenized args in <user args> argv[0...argc-1] = tokenized args in <user args>	
TSO	CALL, LOADGO, execute module on TSO command line passing <runtime options> / <user args>	NOEXECOPS	No	argc = number of tokenized args in <runtime options> / <user args> argv[0...argc-1] = tokenized args in <user args>	
TSO	CALL	PLIST(OS)	n/a	argc=1 argv[0] = name of module	Access CPPL through __osplist as defined in stdlib.h
IMS	Invoke C++ main module	PLIST(OS) Specify TARGET(IMS) also.	n/a	argc=1 argv[0] = 0	Access PCBs through C macros as defined in ims.h
CICS	Invoke C++ main module	Any (or default)	n/a	argc=1 argv[0] = transaction id	

Case sensitivity under TSO

When executing under TSO with the IBM-supplied default setting of PLIST(HOST), Language Environment dynamically determines whether a command processor parameter list (CPPL) has been passed. If so, an application with a C or C++ main routine receives the TSO parameter list in an `argc, argv` format.

If PLIST(TSO) is in effect, the inbound parameter list is a CPPL pointed to by R1. C treats PLIST(TSO) as PLIST(HOST). A user can access the CPPL using the `__osplist` macro if the user specifies PLIST(OS).

Arguments passed in TSO might be case-sensitive, depending on how your C or C++ program is invoked. Table 91 shows when the arguments are case-sensitive, based on how the C or C++ program is invoked.

Table 91. Case sensitivity of arguments under TSO

How C or C++ program is invoked	Example	Case of argument
As TSO command	`cprogram args`	Mixed case (however, if you pass the arguments entirely in uppercase, the argument is lowercase)
By CALL command	`CALL cprogram args`	Lowercase
By CALL command with control `asis`	`CALL cprogram args`	Mixed case (however, if you pass the arguments entirely in uppercase, the argument is lowercase)
In a CLIST with control `asis`	`cprogram args`	Mixed case
As a literal passed to CLIST as a parameter	`cprogram &arg`	Uppercase

Parameter passing considerations with XPLINK C and C++

C and C++ code compiled with the XPLINK option builds parameter lists using the same logical format. However, the compiler might optimize some of the parameters into registers. For more information, see *z/OS Language Environment Vendor Interfaces*.

COBOL parameter passing considerations

COBOL users cannot explicitly set the PLIST and EXECOPS runtime options for an enclave containing a COBOL main program. When COBOL is the main program, Language Environment sets the argument list passed to the application on initialization as follows:

- z/OS (non-CICS)
  - If the COBOL main is invoked via the ATTACH SVC, a halfword-prefixed string is passed to the application after runtime options have been removed. The source of this string is dependent on the environment in which the ATTACH is issued, as follows:
    - If the ATTACH is issued by z/OS to invoke a batch program, the string is specified via the EXEC statement's PARM field.
    - If the ATTACH is issued by TSO to attach a Command Processor (CP), the string is specified as part of the command embedded within the CP parameter of the TSO ATTACH CP command.

- Otherwise, the string is specified via the PARM field of the ATTACH macro.

  Note: The parameter list processing when COBOL is invoked with the ATTACH SVC can be altered with the COBOL parameter list exit IGZEPSX so that register 1 and the argument list are passed without change. If your program is not seeing the behavior mentioned previously, then see your system programmer to determine what changes were made to the COBOL parameter list exit. For information on the COBOL parameter list exit, see *z/OS Language Environment Customization*.

  If changing IGZEPSX is not an approach that can be used in your environment, another approach is to ATTACH to a Language Environment-conforming assembler routine with MAIN=YES and PLIST=OS on the CEEENTRY macro. The Language Environment-conforming assembler routine can then invoke the COBOL program, passing the unchanged contents of register 1 (the address of the parameter list) to the COBOL program.

– If the COBOL main is not invoked by the ATTACH SVC, the halfword-prefixed string provided by the caller is passed to the application after runtime options have been removed if the following linkage is used:
  - The caller of the COBOL program provides an RSA that contains a back chain (HSA) field of binary 0.
  - Register 1 is nonzero.
  - The word addressed by Register 1 (the first parameter pointer word) has the End of List (EOL) bit on and the parameter it addresses is aligned on a halfword or greater boundary.
– Otherwise register 1 and the argument list are passed without change.

• TSO
– In addition to the previous z/OS (non-CICS) considerations, if the COBOL main is invoked from a REXX clist, parameter list processing depends on the method used to invoke the COBOL program.
  - If Address TSO (the default) or Address ATTCHMVS is used, the halfword-prefixed string provided by the caller is passed to the application after runtime options have been removed. Runtime options are processed. Updates made by COBOL to the parameter are not available to the calling REXX.
  - If Address LINKMVS is used, the parameter list provided by the caller is passed unchanged to the application program. Runtime options, if provided are ignored. Updates made by COBOL to the parameter are available to the calling REXX.
  - Address LINK, Address ATTACH, Address LINKPGM, and Address ATTCHPGM are not supported since they use a different convention for parameter lists and save area chaining.

• z/OS UNIX
– The parameter list consists of three parameters passed by reference:
  - Argument-count: a binary fullword integer containing the number of elements in each of the arrays that is passed as the second and third parameters.
  - Argument-length-list: an array of pointers. The Nth entry in the array is the address of a fullword binary integer containing the length of the Nth entry in the Argument-list (the third argument).

- Argument-list: an array of pointers. The Nth entry in the array is the address of the Nth character string passed as an argument on the spawn(), exec(), or command invocation.

- CICS
  - If the COBOL main is invoked in a CICS environment, register 1 is passed without change.

PL/I main procedure parameter passing considerations

The format of the parameter list passed to a PL/I main procedure from the operating system is controlled by the SYSTEM compiler option and also by options on the main PROCEDURE statement.

The SYSTEM compiler option specifies the format used to pass parameters to the PL/I main procedure, and indicates the host system under which the program runs: MVS, CICS, IMS, or TSO. The SYSTEM option allows a program compiled under one system to run under another.

The NOEXECOPS procedure option indicates that runtime options are not present in the operating system parameter list. The NOEXECOPS option can be explicitly specified or implicitly defaulted. Otherwise, it is assumed that runtime options might be present in the operating system parameter list. If present, these runtime options are removed by runtime initialization before the PL/I main procedure gains control.

In order for runtime options to be passed in the operating system parameter list for SYSTEM(MVS), the PL/I main procedure must receive no parameters or receive a single parameter that is a varying character string. If this is not the case, NOEXECOPS is always defaulted.

The OPTIONS(BYVALUE) or OPTIONS(BYADDR) procedure options indicate if the main procedure parameters are passed directly or indirectly. If SYSTEM(IMS) or SYSTEM(CICS) is specified for an Enterprise PL/I for z/OS or a PL/I for MVS & VM main procedure, the OPTIONS(BYVALUE) procedure option is defaulted at compilation time, OPTIONS(BYADDR) is not permitted. When SYSTEM(CICS) and SYSTEM(IMS) is specified, Language Environment remaps the parameters to match the OPTIONS attribute BYADDR or BYVALUE of the main procedure. See “Passing arguments between routines” on page 134 for additional information about Language Environment parameter passing.

The following tables describe the interaction of the PL/I SYSTEM and NOEXECOPS options. Their effect is described in terms of the parameters that are coded on the MAIN procedure statement and also the incoming system, subsystem, or assembler parameter list as initially received by Language Environment.

Table 92. Interactions of SYSTEM and NOEXECOPS

SYSTEM setting	No runtime options (NOEXECOPS)	Runtime options can be present
SYSTEM(MVS)	If the main procedure parameter is a single varying character string, an MVS parameter list is assumed and repackaged so the main procedure receives a halfword-prefixed string. The entire string is passed to the main procedure without change. Otherwise, the parameter list is passed without change.	If the main procedure parameter is a single varying character string, an MVS parameter list is assumed and repackaged so the main procedure receives a halfword-prefixed string. Any runtime options are removed from the string, and the (potentially) altered string is passed. Otherwise, the parameter list is passed without change.
SYSTEM(IMS)	The parameter list is passed without change.	Not allowed
SYSTEM(CICS)	The parameter list is passed without change.	Not allowed
SYSTEM(TSO)	Two levels of pointer indirection are added to the parameter list. The main procedure parameter should be a single pointer that points to the CPPL.	Not allowed

Note:

1. NOEXECOPS is always implied for SYSTEM(CICS), SYSTEM(IMS), and SYSTEM(TSO). NOEXECOPS is also implied for SYSTEM(MVS), if the main procedure has more than one parameter or a single parameter that is not a varying character string.
2. In an IMS environment, if an assembler program is driving a PL/I transaction where LANG is not specified or LANG=NON-PLI (except Pascal) under IMS V4R1, the parameter passes through without change. Otherwise, one level of indirection is removed from the parameter.

   If an assembler program is driving a transaction program written in Enterprise PL/I for z/OS or PL/I for MVS & VM, the main procedure of the transaction must be compiled with SYSTEM(MVS) option; the main procedure receives the parameter list passed from the assembler program in MVS style.

Appendix E. Object library utility

The *object library utility* is used to update libraries of object modules. A library is a partitioned data set (PDS or PDSE) with object modules as members

Object libraries provide for convenient packaging of object modules. With the Object Library Utility, a library can contain object modules with L-names, object modules with S-names, and object modules with writable static data. The Object Library Utility is used to create information, such as which members contain defined L-names, S-names, or writable static data. This information is stored in a special member of the library that will be referred to as the *Object Library Utility directory*.

Commands to add object modules to a library, to delete object modules from a library, or to build the Object Library Utility directory for a library are available. Use the DIR command to build the Object Library Utility directory for a library of object modules. Use the MAP command to list the contents of the Object Library Utility directory.

Creating an object library

You can create an object library under batch or TSO.

Under batch

Under MVS batch, the following cataloged procedures include an Object Library Utility step:

EDCLIB
Maintain an object library.

EDCCLIB
Compile and maintain an object library.

For more information about the data sets used with the Object Library Utility, see *z/OS XL C/C++ User's Guide*.

You can specify options for the Object Library Utility step that generate a library directory, add or delete members of a directory, or generate a map of library members and defined external symbols. This topic shows you how to specify these options under MVS batch.

To compile the C program `WALTER.SOURCE(SUB1)` for L-names and add to `WALTER.SOURCE.OBJ(SUB1)`, use the following JCL. The Object Library Utility directory for the library, `WALTER.SOURCE.OBJ`, is updated in the process.

```
//COMPILE EXEC EDCCLIB,INFILE='WALTER.SOURCE(SUB1)',CPARM='LO',
//      LIBRARY='WALTER.SOURCE.OBJ',MEMBER='SUB1'
```

To request a map for the library `WALTER.SOURCE.OBJ`, use:

```
//OBJLIB EXEC EDCLIB,OPARM='MAP',LIBRARY='WALTER.SOURCE.OBJ'
```

The following example creates a new Object Library Utility directory. If the directory already exists, it is updated:

© Copyright IBM Corp. 1991, 2015

```
//DIRDIR   EXEC EDCLIB,
//         LIBRARY='LUCKY13.CXX.OBJMATH',
//         OPARM='DIR'
```

To create a map:

```
//MAPDIR   EXEC EDCLIB,
//         LIBRARY='LUCKY13.CXX.OBJMATH',
//         OPARM='MAP'
```

To add new members to an object library, use the ADD option to update the directory. For example, to add a new member named MA191, code:

```
//ADDDIR   EXEC EDCLIB,
//         LIBRARY='LUCKY13.CXX.OBJMATH',
//         OPARM='ADD MA191',
//         OBJECT='DSNAME=LUCKY13.CXX.OBJ(OBJ191),DISP=SHR'
```

To delete a member from an object library, use the DEL option to keep the directory up-to-date. For example, to delete a member named OLDMEM, code:

```
//DELDIR   EXEC EDCLIB,
//         LIBRARY='LUCKY13.CXX.OBJMATH',
//         OPARM='DEL OLDMEM'
```

Under TSO

The Object Library Utility has the following syntax:

Syntax

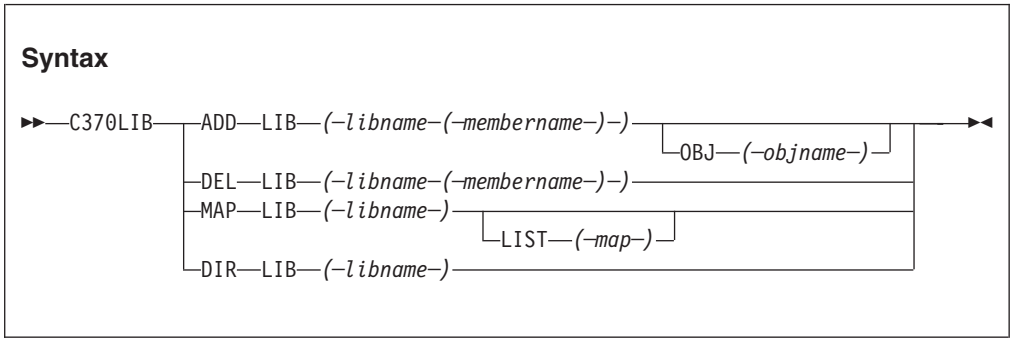

ADD
Adds (or replaces) an object module in an object library.

If the ADD function is used to insert an object module in a member of a library that already exists, the previous member is deleted before the insert unless the source data set is the same as the target data set, in which case the member is not deleted and only the Object Library Utility directory is updated as appropriate.

DEL
Deletes an object module from an object library.

MAP
Lists the names (entry points) of object library members.

DIR
Builds the Object Library Utility directory member. The Object Library Utility directory contains the names (entry points) of library members.

The DIR function is only necessary if object modules were previously added or deleted from the library without using C370LIB.

LIB *(libname(membername))*
Specifies the target data set for the ADD and DEL functions. The data set name must contain a member specification to indicate which member is to be created, replaced, or deleted.

OBJ (*objname***)**
Specifies the source data set containing the object module that is to be added to the library. If you do not specify a data set name, the target data set specified in LIB(libname(membername)) is used as the source.

LIB (*libname***)**
Specifies the object library for which a map is to be produced or for which a Object Library Utility directory is to be built.

LIST (*map***)**
Specifies the data set that is to contain the library map. If an asterisk (*) is specified, the library map is directed to your terminal. If you do not specify a data set name, a name is automatically generated using the library name and the qualifier MAP. If the input library data set is called TEST.OBJ and your user prefix is FRANK, the data set name generated for the map is FRANK.TEST.OBJ.MAP.

Under TSO, you can use either the C370LIB CLIST or the CC CLIST using the parameter C370LIB. The C370LIB parameter of CC CLIST specifies that if the object module from the compile is directed to a member of a PDS, then the Object Library Utility directory is to be updated. This step is the equivalent to a compile and C370LIB ADD step. If the C370LIB parameter is specified and the object module is not directed to a member of a PDS, the C370LIB parameter is ignored.

Object library utility map

The Object Library Utility produces a listing for a given library when the MAP command is specified. The listing contains information on each member of the library. A representative example is shown in Figure 115 on page 576.

```
=========================================================================
|                      Object Library Utility Map                       |
| 1                                                                     |
|C370LIB:5647A01 V2 R9 M00 IBM Language Environment 1999/12/16 16:22:43|
=========================================================================

  Library Name: TS41949.A.OBJECT                    1998/04/22 11:46:39

*-----------------------------------------------------------------------*
*   Member Name: ASMSTUFF                       (D) 1998/04/22 11:46:39 *
* 2                                                 569623400   R01 M01 *
*-----------------------------------------------------------------------*

     (S) External Name: CSECT1
     (S) External Name: ENTRY1

*-----------------------------------------------------------------------*
*   Member Name: CSTUFF                         (D) 1998/04/22 11:46:39 *
* 2                                                 5688216     R32 M00 *
*-----------------------------------------------------------------------*

     (L) Function Name: foo
    (WL) External Name: this_int_is_in_writable_static_and_its_name_will
                         _wrap_because_it_is_too_long

*-----------------------------------------------------------------------*
*   Member Name: CXXSTUFF                       (D) 1998/04/22 11:46:39 *
* 2                                                 5688216     R32 M00 *
*-----------------------------------------------------------------------*
 3
  User Comment: This is a user comment in CXXSTUFF
 4
     (L) Function Name: testeh()
     (L) Function Name: f1()
     (L) Function Name: operator++(U&)
    (WL) External Name: i1
    (WL) External Name: i2


=========  E N D   O F   O B J E C T   L I B R A R Y   M A P  ==========
```

Figure 115. Object library utility map

1 Map Heading
The heading contains the product number, the compiler release number, the compiler version number, and the date and time the Object Library Utility step commenced. The name of the library immediately follows the heading. To the right of the name of the library is the start time of the last Object Library Utility step that updated the Object Library Utility directory.

2 Member Heading
The name of the object module member is immediately followed by the ID of the processor that produced the object module. The processor ID is based on the presence of an END record in the object module having the processor information in the appropriate format. If this information is not present, the Processor ID field is not listed.

The Timestamp field is presented in yy/mm/dd format. The meaning of the timestamp is enclosed in parentheses. That is, the Object Library Utility retains a timestamp for each member and selects the time according to the following hierarchy:

(P) Indicates that the timestamp is extracted from the object module

from the date form of `#pragma comment` or from the timestamp form of `#pragma comment`, whichever comes first.

(D) Indicates that the timestamp is based on the time that the Object Library Utility DIR command was last issued.

(T) Indicates that the timestamp is the time that the ADD command was issued for the member.

3 User Comments

The user form of comments generated by `#pragma comment` is displayed. These comments are extracted from the END record. It is possible to manually add such comments on multiple END records and have them displayed in the listing. See *z/OS XL C/C++ Language Reference* for more information on the END record.

4 Symbol Information

Immediately following the Member Heading (and user comments, if any) is a list of the objects that the member defines. Each symbol is prefixed by Type information, enclosed in parentheses, and either `External Name` or `Function Name`. `Function Name` appears if the object module was compiled with the LONGNAME option and the symbol is the name of a defined external function. In all other cases, `External Name` is displayed. The symbol is the name of an external function defined in the member. That is:

'L' Indicates that the name is an L-name.

'S' Indicates that the name is an S-name.

'W' Indicates that this is a writable static object. If no 'W' is present, then this is not a writable static object.

'WL' Indicates that this is both an L-name and in writable static.

Appendix F. Using the systems programming environment

Note: This topic applies to C applications only.

As a C routine executes, facilities from the Language Environment common library are invoked to set up the execution environment in order to handle termination activities and provide storage management, error handling, runtime options parsing, ILC, and debugging support. In addition, the C library functions are in the Language Environment common library.

For situations in which not all of these services are needed, the system programming facilities of C can provide a limited environment.

System programming facilities allow you to run applications without using the Language Environment common library, or with just the C library functions, and to:

- Develop C applications that do not require the Language Environment common library on the machines on which they run.
- Use C as an assembler language substitute to, for example, write exit routines for MVS, TSO, or JES.
- Develop applications featuring:
  - A persistent C environment, in which a C environment is created once and used repeatedly for C function execution from any language.
  - Co-routines that use a two-stack model, as in client-server style applications. In this style, the user application calls on the applications server to perform services independently of the user and then return to the user.

For more information on the system programming facilities of C, see *z/OS XL C/C++ Programming Guide*.

This topic discusses how to build these applications once you have compiled them with the C compiler. You must compile these programs with the NOSTART option.

Building freestanding applications

Freestanding applications need to be linked with specific alternate initialization routines.

To explicitly include an alternative initialization routine under MVS, use the linkage editor INCLUDE and ENTRY control statements. To include the alternate initialization routines described in this topic, you must allocate CEE.SCEESPC to the SYSLIB DD. For example, the following linkage editor control stream might be used to specify `EDCXSTRT` as an alternate initialization routine (another example is shown in Figure 118 on page 580):

```
INCLUDE SYSLIB(EDCXSTRT)
ENTRY EDCXSTRT
INCLUDE SYSIN
```

Figure 116. Specifying alternate initialization at link-edit time

© Copyright IBM Corp. 1991, 2015

When building freestanding applications under MVS, CEE.SCEESPC must be included in the link-edit SYSLIB concatenation. Also, if C library functions are needed, CEE.SCEESPC must precede CEE.SCEELKED.

The routines to support this function (EDCXSTRT and EDCXSTRL) are CEESTART replacements in your module. You must specify NOSTART compiler option when compiling the file that contains the main function. Therefore, the appropriate EDCXSTR*n* routine must be explicitly included at link-edit.

A simple freestanding routine that requires a C library function is shown in Figure 117.

```
#include <stdio.h>
main() {
   puts("Hello, World");
   return 3999;
}
```

Figure 117. Simple freestanding routine

This routine, RET3999, is compiled with `nostart` compiler option and link-edited using control statements shown in Figure 118. It is assumed that:

- The object module is available to the linkage-editor using an OBJECT DD statement.
- CEE.SCEESPC and CEE.SCEELKED libraries are specified on a SYSLIB DD statement.
- The intended load module member name is specified on a SYSLMOD DD statement.

The CEE.SCEERUN runtime load library must be available at runtime because it contains the C library function `puts()`.

```
INCLUDE SYSLIB(EDCXSTRL)
INCLUDE OBJECT
ENTRY EDCXSTRL
```

Figure 118. Link-edit control statements used to build a freestanding MVS routine

Figure 119 on page 581 shows how to compile and link a freestanding program using the cataloged procedure EDCCL. See *z/OS XL C/C++ Programming Guide* for more information about EDCCL.

```
//* Appropriate JOB card
//*-------------------------------------------------------------------
//*************************************************
//*** COMPILE AND LINK USING EDCXSTRL AS ENTRY POINT
//*************************************************
//C106001     EXEC    EDCCL,
//      INFILE='ANDREW.SPC.SOURCE(C106000)',
//      OUTFILE='ANDREW.SPC.LOAD(C106000),DISP=SHR',
//      CPARM='OPT(2),NOSEQ,NOMAR,NOSTART',
//      LPARM='RMODE=ANY,AMODE=31'
//LKED.SYSLIB DD DSN=CEE.SCEESPC,DISP=SHR
//            DD DSN=CEE.SCEELKED,DISP=SHR
//LKED.SYSIN  DD *
  INCLUDE SYSLIB(EDCXSTRL)
  ENTRY EDCXSTRL
/*
```

Figure 119. Compile and link using EDCCL

Special considerations for reentrant modules

A simple freestanding routine that does not require C library functions is shown in Figure 120. This routine uses the `exit()` function, which is normally part of the C library but (like `sprintf()`) is available to freestanding routines without requiring the dynamic library. This routine is not naturally reentrant, but the resulting load module is reentrant.

```
#include <stdlib.h>

int main() {
    static int i[5]={0,1,2,3,4};
    exit(320+i[1]);
}
```

Figure 120. Sample reentrant freestanding routine

The JCL required to build and execute this routine is shown in Figure 121 on page 582. The bracketed numbers in the figure refer to the comments that follow.

```
//PRLK      EXEC   PGM=EDCPRLK,PARM='MAP,NCAL'                  [Figure 121-1]
//STEPLIB   DD     DSN=CEE.SCEERUN,DISP=SHR
//SYSMSGS   DD     DSN=CEE.SCEEMSGP(EDCPMSGE),DISP=SHR
//SYSOUT    DD     SYSOUT=*
//SYSMOD    DD     DSN=&&OBJ,SPACE=(TRK,(1,1)),UNIT=SYSDA,
//                 DCB=(BLKSIZE=400,RECFM=FB,LRECL=80),
//                 DISP=(MOD,PASS)
//SYSIN     DD     DSN=RETS321.OBJ,DISP=SHR                     [Figure 121-2]
//*
//*
//LKED      EXEC   PGM=HEWL,PARM='MAP,XREF,LIST'
//SYSUT1    DD     SPACE=(CYL,1),UNIT=SYSDA
//PRELINK   DD     DSN=&&OBJ,DISP=(OLD,DELETE)                  [Figure 121-3]
//SYSLIN    DD     *
 INCLUDE SYSLIB(EDCXSTRT)                                      [Figure 121-4]
 INCLUDE PRELINK                                               [Figure 121-5]
 INCLUDE SYSLIB(EDCXEXIT)                                      [Figure 121-6]
 INCLUDE SYSLIB(EDCRCINT)                                      [Figure 121-7]
/*
//SYSPRINT  DD     SYSOUT=*
//SYSLMOD   DD     DSN=&&GOSET(GO),
//                 UNIT=SYSDA,SPACE=(TRK,(1,1,1)),
//                 DISP=(NEW,PASS)
//SYSLIB    DD     DSN=CEE.SCEESPC,DISP=(SHR,PASS)
//          DD     DSN=CEE.SCEELKED,DISP=(SHR,PASS)
//GO        EXEC   PGM=*.LKED.SYSLMOD
```

Figure 121. Building and running a reentrant freestanding MVS routine

Notes

[Figure 121-1]
The prelinker must be used for modules compiled with the RENT compiler option.

[Figure 121-2]
This is the object module created by compiling the sample module with the RENT and NOSTART compiler options.

[Figure 121-3]
The output from the prelinker is made available to the linkage editor.

[Figure 121-4]
The alternate initialization routine (`EDCXSTRT` in this example) must be explicitly included in the module. If this is not the first CSECT in the module it must be explicitly named as the module entry point.

[Figure 121-5]
The prelinked output is included in the load module.

[Figure 121-6]
`EDCXEXIT` must be explicitly included if the `exit()` function is used in the application.

[Figure 121-7]
The routine `EDCRCINT` must be explicitly included in the module if the RENT compiler option is used. No error is detected at load time if this routine is not explicitly included. At execution time, abend 2106, reason code 7205, results if `EDCRCINT` is required but not included.

Building system exit routines

There are no special considerations for building system exit routines. These routines can be linked with their callers or dynamically loaded and invoked. CEE.SCEESPC must be available at link-edit. If C library functions are required by the exit routines, the CEE.SCEELKED library must also be made available **after** CEE.SCEESPC. If the routines were compiled with OPT(2), the entry point must be explicitly named in the link-edit input.

Note: You must compile these programs with the NOSTART option.

Building persistent C environments

There are no special considerations for building applications that use persistent C environments. The data set CEE.SCEESPC contains the object modules to be included.

If C library functions are required by any routine called in this environment, the library stub routines should also be made available at link time *after* CEE.SCEESPC.

Note: You must compile these programs with the NOSTART option.

Building user-server environments

To build your server application, follow the rules for building a freestanding application as described in "Building freestanding applications" on page 579.

There are no special considerations for building user applications. The automatic call facility causes the right routines from SYSLIB to be included.

Note: You must compile servers with the NOSTART option.

Summary

Table 93. Summary of types

Type of application	How it is called	Module entry point	Data sets required at execution time	Runtime options and other considerations
A mainline function that requires no C-specific library functions.	From the command line, JCL, or an EXEC or CLIST.	EDCXSTRT must be explicitly included at bind time.	None.	Runtime options are specified by `#pragma runopts` in the compilation unit for the `main()` function. The HEAP and STACK options are honored. STACK defaults to above the 16M line.
A mainline function that requires C library functions.	From the command line, JCL, or an EXEC or CLIST.	EDCXSTRL must be explicitly included at bind time.	C library functions.	Runtime options are specified by `#pragma runopts` in the compilation unit for the `main()` function. The TRAP, HEAP and STACK options are honored, but the stack defaults to above the 16M line.

Table 93. Summary of types (continued)

Type of application	How it is called	Module entry point	Data sets required at execution time	Runtime options and other considerations
A mainline function that uses storage pre-allocated by the caller.	From Assembler code.		C library functions are optional; the caller must load these functions and pass their addresses to EDCXSTRX, if required to by the application.	Runtime options are specified by `#pragma runopts` in the `main()` function. The TRAP option is honored if C library functions are required.
An exit.	Typically from assembler code, with a structured parameter list.		C library functions, if required.	Runtime options are specified by `#pragma runopts` in the compile unit for the entry point. The HEAP and STACK options are honored, but the stack defaults to be above the 16M line. The TRAP option is honored if C library functions are required.
A C subroutine called from Assembler language using a pre-established persistent environment.	A handle, the address of the subroutine, and a parameter list are passed to EDCXHOTU.		C library functions are optional, depending on the way the handle was set up.	Runtime options are specified by `#pragma runopts` in any compile unit. The HEAP and STACK options are honored, but the stack defaults to above the 16M line. The TRAP option is honored if C library functions are called for. The runopts in the first object module in the link-edit that contains runopts prevails, even if this compilation unit is part of the calling application. The environment is established by calling EDCXHOTC or EDCXHOTL (if library functions are required). These functions return a value (the handle), which is used to call functions that use the environment.

Table 93. Summary of types (continued)

Type of application	How it is called	Module entry point	Data sets required at execution time	Runtime options and other considerations
A server.	User code includes a stub routine that calls EDCXSRVI. This causes the server to be loaded and control to be passed to its entry point.	EDCXSTRT or EDCXSTRL, depending on whether the server needs C library functions.	C library functions, if required by the server code.	Runtime options are the same as for EDCXSTRL or EDCXSTRT. The author of the server must supply stub routines that call EDCXSRVI and EDCXSRVN to initialize and communicate with the server. These are bound with the user application.
A user of an application server.			The server and C library functions, if required by the server.	The author of the server must supply stub routines which call EDCXSRVI and EDCXSRVN to initialize and communicate with the server.

Appendix G. Sort and merge considerations

This topic discusses the runtime aspects of sort and merge operations. For details on the compile-time aspects of sort and merge, including instructions on coding the sort and merge procedures, see your compiler programming guide.

Under Language Environment, you can invoke the sort facility to sort or merge records in a particular sequence. A sort operation takes an unordered sequence of input data, arranges it according to a specified key or pattern, and places it into an output file. A merge operation compares two or more files that have already been sorted according to an identical key and combines them in a specified order in an output file.

To invoke the sort facility in Language Environment, you can use either of the following:

- An HLL construct
  - COBOL's SORT and MERGE statements. (The SORT and MERGE statements are not supported when running under z/OS UNIX.)
  - PL/I's PLISRT*x* interface, where *x* is replaced by A, B, C, or D

    You cannot call the PLISRT*x* interface under CICS.
- A method other than an HLL construct (for example, assembler routines, JCL, or ISPF).

Under Language Environment, your IBM sort/merge licensed program must be DFSORT or an equivalent that honors the DFSORT extended parameter list. Whenever DFSORT is mentioned in this topic, you can use any equivalent SORT product.

Restriction: SORT and MERGE is not supported in a POSIX(ON) environment.

Invoking DFSORT directly

For information about using the methods to run DFSORT directly with JCL or to invoke DFSORT directly from an assembler program, see *z/OS DFSORT Application Programming Guide*. Also see that topic for details on DFSORT's many built-in features that you can use to eliminate the need for writing program logic (for example, the INCLUDE, OMIT, OUTREC, and SUM statements).

Using the COBOL SORT and MERGE verbs

This topic contains a high-level overview of COBOL SORT and MERGE verbs. It is designed to introduce you to concepts that help you understand some of the special considerations for using these COBOL statements in Language Environment. For a detailed description of how to use SORT and MERGE, see the appropriate version of the COBOL programming guide in the COBOL library at Enterprise COBOL for z/OS library (http://www-01.ibm.com/support/docview.wss?uid=swg27036733).

A COBOL program that contains a sort operation can be organized so that an *input procedure* reads and operates on one or more input files before the files are actually sorted. To specify the input procedure:

```
SORT...INPUT PROCEDURE
```

© Copyright IBM Corp. 1991, 2015

You can also specify an *output procedure* that processes the files after they are sorted:

```
SORT...OUTPUT PROCEDURE
```

These input and output procedures can be used to add, delete, alter, edit, or otherwise modify the records.

You can also sort records under COBOL without any processing by the input and output procedures. For example, to read records into a new file for sorting without any preliminary processing, specify:

```
SORT...USING
```

To transfer sorted records to a file without any further processing, specify:

```
SORT...GIVING
```

User exit considerations

SORT or MERGE COBOL verbs can trigger COBOL-generated user exits (E15 for sort, E35 for merge). These exits include any input or output procedures. However, the exits are not triggered when a COBOL USING or GIVING statement is in effect and the files qualify for FASTSRT.

Language Environment treats the COBOL-generated exits differently than those requested by a direct invocation of DFSORT. Language Environment treats user exits triggered by COBOL SORT or MERGE as part of the enclave of the routine that invoked DFSORT; the SVC LINK used to invoke DFSORT is *not* considered by Language Environment to initiate a new implicit nested enclave. This is not the case for direct invocations of DFSORT, which do result in the creation of a new nested enclave. See Chapter 31, "Using nested enclaves," on page 525 for more information on nested enclaves, and see *z/OS DFSORT Application Programming Guide* for more information on direct invocations of DFSORT.

Condition handling considerations

This topic summarizes how Language Environment condition handling behaves when a Enterprise COBOL for z/OS, COBOL for OS/390 & VM, COBOL for MVS & VM, COBOL/370, or VS COBOL II routine is involved in a SORT or MERGE.

Program interrupts

User handlers established by the routine that initiated the SORT/MERGE are able to handle program interrupts as they are presented to the condition manager by a condition token. Normal condition handling as described in Chapter 15, "Introduction to Language Environment condition handling," on page 193 occurs.

Establishment of HLL-specific handlers and user handlers is not supported while in a SORT input or output procedure. The results are unpredictable, and the condition handler does not attempt to diagnose this case.

HLL-specific handlers and user handlers established by a routine *called by* an input or output procedure are able to handle program interrupts. However, because these exits are typically invoked many times (equivalent to the number of records being sorted for each exit), it is recommended that you register the handler within the application that initiated the SORT/MERGE in order to avoid overhead.

Language Environment-signaled conditions

HLL-specific handlers and user handlers established by the routine that initiated the SORT/MERGE are able to handle any condition signaled by Language

Environment. Normal condition handling as described in Chapter 15, “Introduction to Language Environment condition handling,” on page 193 occurs.

Abends

When there is an abend, the DFSORT ESTAE exit intercepts the abend, and performs various cleanups and recoveries. Informational dumps and messages are produced as appropriate. The abend is then percolated and eventually intercepted by the Language Environment ESTAE exit. Condition handling then continues as described in Chapter 15, “Introduction to Language Environment condition handling,” on page 193.

By the time the Language Environment ESTAE exit intercepts the abend, the SORT has been terminated. Language Environment moves the current resume cursor to the return point where SORT was invoked and reflects the deletion of stack frames (and associated load modules) following the SORT invocation. Any user condition handlers associated with these stack frames (those following the SORT invocation) do not get control.

Using the PL/I PLISRTx interface

This topic contains a high-level overview of the PLISRT*x* interfaces to DFSORT. It is designed to introduce you to concepts that help you understand some of the special considerations for using these PL/I interfaces in Language Environment. For a detailed description of how to use PLISRT*x*, see the IBM Enterprise PL/I for z/OS library (http://www.ibm.com/support/docview.wss?uid=swg27036735) .

PL/I provides a SORT interface called PLISRT*x*. When you make a call to PLISRT*x*, you replace *x* with A, B, C, or D, depending on whether your input comes from a data set or a PL/I subroutine, and whether your output is to be written to a data set or processed by a PL/I subroutine:

PLISRTA
Unsorted input is read from a data set and then sorted. The sorted output is written to a data set.

PLISRTB
Unsorted input is provided and processed by a PL/I subroutine before sorting. The sorted output is written to a data set.

PLISRTC
Unsorted input is read from a data set and then sorted. The sorted output is then processed by a PL/I subroutine.

PLISRTD
Unsorted input is provided and processed by a PL/I subroutine before sorting. The sorted output is then processed by a PL/I subroutine.

In the call to PLISRT*x*, you also pass information about your data, using the SORT and RECORD arguments, and specify the maximum amount of storage you will allow DFSORT to use.

User exit considerations

Your input handling subroutine and output handling subroutine must be written in PL/I. PL/I generates a DFSORT E15 exit for your input handling subroutine and a DFSORT E35 exit for your output handling subroutine.

A call to one of the PLISRT*x* interfaces might trigger a call to user exit E15, E35, or both, depending on whether a subroutine is to process your input before sorting, or your output after sorting, as shown in Table 94.

Table 94. DFSORT exit called as a function of a PLISRTx interface call

PL/I sort interface	DFSORT exit
PLISRTA	None
PLISRTB	E15
PLISRTC	E35
PLISRTD	E15 and E35

Language Environment treats the generated E15 and E35 exits differently than those requested by a direct invocation of DFSORT. Language Environment treats user exits triggered by PLISRT*x* as part of the enclave of the routine that invoked DFSORT; the SVC LINK used to invoke DFSORT is **not** considered by Language Environment to initiate a new implicit nested enclave. See Chapter 31, "Using nested enclaves," on page 525 for more information on nested enclaves, and see *z/OS DFSORT Application Programming Guide* for more information on direct invocations of DFSORT.

Condition handling considerations

Input and output handling subroutines can issue GOTOs. If you need to deactivate the SORT program for any reason while in one of these exits, issue a GOTO out of the subroutine.

Program interrupts and Language Environment-signaled conditions

PL/I ON-units can be established in any of the following:

- The routine that made a call to PLISRT*x*
- The input(E15) or output(E35) procedure
- A routine called by the input or output procedure

These ON-units can handle program interrupts and Language Environment-signaled conditions. Normal condition handling, as described in Chapter 15, "Introduction to Language Environment condition handling," on page 193, occurs.

Abends

ON-units do not have the opportunity to handle abends that arise during a sort operation.

When there is an abend, the DFSORT ESTAE exit intercepts the abend and performs various clean-ups and recoveries. Informational dumps and messages are produced as appropriate. The abend is then percolated and eventually the Language Environment ESTAE exit intercepts it. Condition handling then continues as described in Chapter 15, "Introduction to Language Environment condition handling," on page 193.

By the time the Language Environment ESTAE exit intercepts the abend, the SORT has been terminated. Language Environment moves the current resume cursor to the return point where SORT was invoked and reflects the deletion of stack frames

(and associated load modules) after the SORT invocation. Any user condition handlers associated with these stack frames (those following the SORT invocation) do not get control.

When running DFSORT (or an OEM SORT function), it is recommended that the TRAP(ON), or TRAP(ON,SPIE) Language Environment runtime option be specified. This will ensure that the Language Environment ESPIE is available to process expected internal Language Environment program interrupts.

Appendix H. Running COBOL programs under ISPF

This topic applies to COBOL users only.

When you code your application using ISPF panels, you can gain interactive access to your COBOL application.

Note:

1. If you attempt to pass runtime options to a COBOL program that is invoked from ISPF, the runtime options will be treated as program arguments.
2. Enterprise COBOL for z/OS, COBOL for OS/390 & VM, COBOL for MVS & VM and COBOL/370 programs are allowed to run concurrently in both screens of the ISPF split screen mode.

   CAUTION:
   Prior versions of COBOL may not run concurrently in both screens of the ISPF split screen mode.

© Copyright IBM Corp. 1991, 2015

Appendix I. Language Environment macros

The macros identified in this topic are provided as programming interfaces for customers by Language Environment.

Attention:

Do not use as programming interfaces any Language Environment macros other than those identified in this topic.

All macros listed here are provided as General-Use Programming Interfaces.

- CEECAA (see "CEECAA macro — Generate a CAA mapping" on page 453)
- CEEDSA (see "CEEDSA macro — Generate a DSA mapping" on page 453)
- CEEENTRY (see "CEEENTRY macro— Generate a Language Environment-conforming prolog" on page 449)
- CEEFETCH (see "CEEFETCH macro — Dynamically load a routine" on page 459)
- CEELOAD (see "CEELOAD macro — Dynamically load a Language Environment-conforming routine" on page 456)
- CEEPPA (see "CEEPPA macro — Generate a PPA" on page 454)
- CEERELES (see "CEERELES macro — Dynamically delete a routine" on page 467)
- CEETERM (see "CEETERM macro — Terminate a Language Environment-conforming routine" on page 452)
- CEEXOPT (see Chapter 9, "Using runtime options," on page 119)
- CEEXPIT (see "Macros that generate the PreInit table" on page 483)
- CEEXPITY (see "Macros that generate the PreInit table" on page 483)
- CEEXPITS (see "Macros that generate the PreInit table" on page 483)
- `__csplist` (see "C and C++ parameter passing considerations" on page 563)
- `__osplist` (see "C and C++ parameter passing considerations" on page 563)
- `__pcblist` (see "C and C++ parameter passing considerations" on page 563)
- `__R1` (see "C and C++ parameter passing considerations" on page 563)

© Copyright IBM Corp. 1991, 2015

Appendix J. PL/I macros that activate variables

Several PL/I macros shipped with Language Environment activate (%ACT) variables on behalf of the user program. Using them, code developers can use common Language Environment data types. Use of these variable names by a user program will result in a compile error. Table 95 lists the macros and the preprocessor variable names.

These PL/I preprocessor variables correspond with the Language Environment data types of the same name. Use them much as you would standard PL/I attributes. They can be used in combination with:

- Storage class attributes (such as BASED)
- Scope attributes (such as EXTERNAL)
- Alignment attributes (such as ALIGNED)
- Aggregation attributes, including dimensions and structure level numbers; in fact, some of the data types require the use of level numbers

The Language Environment data types must *not* be used in combination with:

- Arithmetic attributes, including BASE, SCALR, MODE, PRECISION and PICTURE
- String attributes, including BIT, CHAR, GRAPHIC, VARYING and PICTURE
- Program control data Attributes, including AREA, ENTRY, FILE, LABEL, OFFSET, POINTER, TASK and VARIABLE
- The LIKE attribute, although you can LIKEn another identifier to one declared using the Language Environment data types

It is strongly recommended that you always code the Language Environment data type as the last attribute in any identifier's declaration. Unlike true PL/I attributes, order sometimes counts.

There is another difference between these Language Environment data types and true PL/I attributes: some of them may not be used as parameter descriptors (in the parameter list of the ENTRY attribute). Consequently, some of the data types are available in two forms: with and without a "_PARM" suffix. In these cases, you must use the _PARM version when you specify a parameter descriptor, and the other version in all other contexts.

One final difference between the Language Environment data types in the following tablet and true PL/I attributes which you must be aware of is that the Language Environment data types must be treated as reserved words. Whereas PL/I attribute names can also be used as identifier names, the Language Environment data type names may not be used in any context other than that of an attribute.

Table 95. Variables activated by PL/I macros

PL/I macro	Variables activated
CEEIBMAW	INT2 INT4 FLOAT4 FLOAT8

© Copyright IBM Corp. 1991, 2015

Table 95. Variables activated by PL/I macros (continued)

PL/I macro	Variables activated
	FLOAT16 COMPLEX4 COMPLEX8 COMPLEX16 VSTRING VSTRING_PARM CHAR80 FEEDBACK FEED_BACK FEEDBACK_PARM FEED_BACK_PARM CEE_ENTRY CEE_ENTRY_PARM
CEEIBMCT	FBCHECK

Appendix K. Accessibility

Accessible publications for this product are offered through IBM Knowledge Center (http://www.ibm.com/support/knowledgecenter/SSLTBW/welcome).

If you experience difficulty with the accessibility of any z/OS information, send a detailed message to the "Contact us" web page for z/OS (http://www.ibm.com/systems/z/os/zos/webqs.html) or use the following mailing address.

IBM Corporation
Attention: MHVRCFS Reader Comments
Department H6MA, Building 707
2455 South Road
Poughkeepsie, NY 12601-5400
United States

Accessibility features

Accessibility features help users who have physical disabilities such as restricted mobility or limited vision use software products successfully. The accessibility features in z/OS can help users do the following tasks:

- Run assistive technology such as screen readers and screen magnifier software.
- Operate specific or equivalent features by using the keyboard.
- Customize display attributes such as color, contrast, and font size.

Consult assistive technologies

Assistive technology products such as screen readers function with the user interfaces found in z/OS. Consult the product information for the specific assistive technology product that is used to access z/OS interfaces.

Keyboard navigation of the user interface

You can access z/OS user interfaces with TSO/E or ISPF. The following information describes how to use TSO/E and ISPF, including the use of keyboard shortcuts and function keys (PF keys). Each guide includes the default settings for the PF keys.

- *z/OS TSO/E Primer*
- *z/OS TSO/E User's Guide*
- *z/OS ISPF User's Guide Vol I*

Dotted decimal syntax diagrams

Syntax diagrams are provided in dotted decimal format for users who access IBM Knowledge Center with a screen reader. In dotted decimal format, each syntax element is written on a separate line. If two or more syntax elements are always present together (or always absent together), they can appear on the same line because they are considered a single compound syntax element.

Each line starts with a dotted decimal number; for example, 3 or 3.1 or 3.1.1. To hear these numbers correctly, make sure that the screen reader is set to read out

© Copyright IBM Corp. 1991, 2015

punctuation. All the syntax elements that have the same dotted decimal number (for example, all the syntax elements that have the number 3.1) are mutually exclusive alternatives. If you hear the lines 3.1 USERID and 3.1 SYSTEMID, your syntax can include either USERID or SYSTEMID, but not both.

The dotted decimal numbering level denotes the level of nesting. For example, if a syntax element with dotted decimal number 3 is followed by a series of syntax elements with dotted decimal number 3.1, all the syntax elements numbered 3.1 are subordinate to the syntax element numbered 3.

Certain words and symbols are used next to the dotted decimal numbers to add information about the syntax elements. Occasionally, these words and symbols might occur at the beginning of the element itself. For ease of identification, if the word or symbol is a part of the syntax element, it is preceded by the backslash (\) character. The * symbol is placed next to a dotted decimal number to indicate that the syntax element repeats. For example, syntax element *FILE with dotted decimal number 3 is given the format 3 * FILE. Format 3* FILE indicates that syntax element FILE repeats. Format 3* * FILE indicates that syntax element * FILE repeats.

Characters such as commas, which are used to separate a string of syntax elements, are shown in the syntax just before the items they separate. These characters can appear on the same line as each item, or on a separate line with the same dotted decimal number as the relevant items. The line can also show another symbol to provide information about the syntax elements. For example, the lines 5.1*, 5.1 LASTRUN, and 5.1 DELETE mean that if you use more than one of the LASTRUN and DELETE syntax elements, the elements must be separated by a comma. If no separator is given, assume that you use a blank to separate each syntax element.

If a syntax element is preceded by the % symbol, it indicates a reference that is defined elsewhere. The string that follows the % symbol is the name of a syntax fragment rather than a literal. For example, the line 2.1 %OP1 means that you must refer to separate syntax fragment OP1.

The following symbols are used next to the dotted decimal numbers.

? indicates an optional syntax element
The question mark (?) symbol indicates an optional syntax element. A dotted decimal number followed by the question mark symbol (?) indicates that all the syntax elements with a corresponding dotted decimal number, and any subordinate syntax elements, are optional. If there is only one syntax element with a dotted decimal number, the ? symbol is displayed on the same line as the syntax element, (for example 5? NOTIFY). If there is more than one syntax element with a dotted decimal number, the ? symbol is displayed on a line by itself, followed by the syntax elements that are optional. For example, if you hear the lines 5 ?, 5 NOTIFY, and 5 UPDATE, you know that the syntax elements NOTIFY and UPDATE are optional. That is, you can choose one or none of them. The ? symbol is equivalent to a bypass line in a railroad diagram.

! indicates a default syntax element
The exclamation mark (!) symbol indicates a default syntax element. A dotted decimal number followed by the ! symbol and a syntax element indicate that the syntax element is the default option for all syntax elements that share the same dotted decimal number. Only one of the syntax elements that share the dotted decimal number can specify the ! symbol. For example, if you hear the lines 2? FILE, 2.1! (KEEP), and 2.1 (DELETE), you know that (KEEP) is the

default option for the FILE keyword. In the example, if you include the FILE keyword, but do not specify an option, the default option KEEP is applied. A default option also applies to the next higher dotted decimal number. In this example, if the FILE keyword is omitted, the default FILE(KEEP) is used. However, if you hear the lines 2? FILE, 2.1, 2.1.1! (KEEP), and 2.1.1 (DELETE), the default option KEEP applies only to the next higher dotted decimal number, 2.1 (which does not have an associated keyword), and does not apply to 2? FILE. Nothing is used if the keyword FILE is omitted.

*** indicates an optional syntax element that is repeatable**

The asterisk or glyph (*) symbol indicates a syntax element that can be repeated zero or more times. A dotted decimal number followed by the * symbol indicates that this syntax element can be used zero or more times; that is, it is optional and can be repeated. For example, if you hear the line 5.1* data area, you know that you can include one data area, more than one data area, or no data area. If you hear the lines 3* , 3 HOST, 3 STATE, you know that you can include HOST, STATE, both together, or nothing.

Notes:

1. If a dotted decimal number has an asterisk (*) next to it and there is only one item with that dotted decimal number, you can repeat that same item more than once.
2. If a dotted decimal number has an asterisk next to it and several items have that dotted decimal number, you can use more than one item from the list, but you cannot use the items more than once each. In the previous example, you can write HOST STATE, but you cannot write HOST HOST.
3. The * symbol is equivalent to a loopback line in a railroad syntax diagram.

+ indicates a syntax element that must be included

The plus (+) symbol indicates a syntax element that must be included at least once. A dotted decimal number followed by the + symbol indicates that the syntax element must be included one or more times. That is, it must be included at least once and can be repeated. For example, if you hear the line 6.1+ data area, you must include at least one data area. If you hear the lines 2+, 2 HOST, and 2 STATE, you know that you must include HOST, STATE, or both. Similar to the * symbol, the + symbol can repeat a particular item if it is the only item with that dotted decimal number. The + symbol, like the * symbol, is equivalent to a loopback line in a railroad syntax diagram.

Notices

This information was developed for products and services offered in the U.S.A. or elsewhere.

IBM may not offer the products, services, or features discussed in this document in other countries. Consult your local IBM representative for information on the products and services currently available in your area. Any reference to an IBM product, program, or service is not intended to state or imply that only that IBM product, program, or service may be used. Any functionally equivalent product, program, or service that does not infringe any IBM intellectual property right may be used instead. However, it is the user's responsibility to evaluate and verify the operation of any non-IBM product, program, or service.

IBM may have patents or pending patent applications covering subject matter described in this document. The furnishing of this document does not give you any license to these patents. You can send license inquiries, in writing, to:

IBM Director of Licensing
IBM Corporation
North Castle Drive
Armonk, NY 10504-1785
U.S.A

For license inquiries regarding double-byte character set (DBCS) information, contact the IBM Intellectual Property Department in your country or send inquiries, in writing, to:

Intellectual Property Licensing
Legal and Intellectual Property Law
IBM Japan, Ltd.
19-21, Nihonbashi-Hakozakicho, Chuo-ku
Tokyo 103-8510, Japan

The following paragraph does not apply to the United Kingdom or any other country where such provisions are inconsistent with local law: INTERNATIONAL BUSINESS MACHINES CORPORATION PROVIDES THIS PUBLICATION “AS IS” WITHOUT WARRANTY OF ANY KIND, EITHER EXPRESS OR IMPLIED, INCLUDING, BUT NOT LIMITED TO, THE IMPLIED WARRANTIES OF NON-INFRINGEMENT, MERCHANTABILITY OR FITNESS FOR A PARTICULAR PURPOSE. Some states do not allow disclaimer of express or implied warranties in certain transactions, therefore, this statement may not apply to you.

This information could include technical inaccuracies or typographical errors. Changes are periodically made to the information herein; these changes will be incorporated in new editions of the publication. IBM may make improvements and/or changes in the product(s) and/or the program(s) described in this publication at any time without notice.

Any references in this information to non-IBM Web sites are provided for convenience only and do not in any manner serve as an endorsement of those Web sites. The materials at those Web sites are not part of the materials for this IBM product and use of those Web sites is at your own risk.

© Copyright IBM Corp. 1991, 2015

IBM may use or distribute any of the information you supply in any way it believes appropriate without incurring any obligation to you.

Licensees of this program who wish to have information about it for the purpose of enabling: (i) the exchange of information between independently created programs and other programs (including this one) and (ii) the mutual use of the information which has been exchanged, should contact:

Site Counsel
IBM Corporation
2455 South Road
Poughkeepsie, NY 12601-5400
USA

Such information may be available, subject to appropriate terms and conditions, including in some cases, payment of a fee.

The licensed program described in this information and all licensed material available for it are provided by IBM under terms of the IBM Customer Agreement, IBM International Program License Agreement, or any equivalent agreement between us.

Information concerning non-IBM products was obtained from the suppliers of those products, their published announcements or other publicly available sources. IBM has not tested those products and cannot confirm the accuracy of performance, compatibility or any other claims related to non-IBM products. Questions on the capabilities of non-IBM products should be addressed to the suppliers of those products.

All statements regarding IBM's future direction or intent are subject to change or withdrawal without notice, and represent goals and objectives only.

If you are viewing this information softcopy, the photographs and color illustrations may not appear.

COPYRIGHT LICENSE:

This information might contain sample application programs in source language, which illustrate programming techniques on various operating platforms. You may copy, modify, and distribute these sample programs in any form without payment to IBM, for the purposes of developing, using, marketing or distributing application programs conforming to the application programming interface for the operating platform for which the sample programs are written. These examples have not been thoroughly tested under all conditions. IBM, therefore, cannot guarantee or imply reliability, serviceability, or function of these programs. The sample programs are provided "AS IS", without warranty of any kind. IBM shall not be liable for any damages arising out of your use of the sample programs.

Policy for unsupported hardware

Various z/OS elements, such as DFSMS, HCD, JES2, JES3, and MVS, contain code that supports specific hardware servers or devices. In some cases, this device-related element support remains in the product even after the hardware devices pass their announced End of Service date. z/OS may continue to service element code; however, it will not provide service related to unsupported hardware devices. Software problems related to these devices will not be accepted

for service, and current service activity will cease if a problem is determined to be associated with out-of-support devices. In such cases, fixes will not be issued.

Minimum supported hardware

The minimum supported hardware for z/OS releases identified in z/OS announcements can subsequently change when service for particular servers or devices is withdrawn. Likewise, the levels of other software products supported on a particular release of z/OS are subject to the service support lifecycle of those products. Therefore, z/OS and its product publications (for example, panels, samples, messages, and product documentation) can include references to hardware and software that is no longer supported.

- For information about software support lifecycle, see: IBM Lifecycle Support for z/OS (http://www.ibm.com/software/support/systemsz/lifecycle/)
- For information about currently-supported IBM hardware, contact your IBM representative.

Programming interface information

This book documents intended Programming Interfaces that allow the customer to write programs to obtain the services of Language Environment in z/OS.

Trademarks

IBM, the IBM logo, and ibm.com are trademarks or registered trademarks of International Business Machines Corp., registered in many jurisdictions worldwide. Other product and service names might be trademarks of IBM or other companies. A current list of IBM trademarks is available on the Web at "Copyright and trademark information" at www.ibm.com/legal/copytrade.shtml (http://www.ibm.com/legal/copytrade.shtml).

UNIX is a registered trademark of The Open Group in the United States and other countries.

Index

Special characters

__csplist macro 564
__osplist macro 564
__pcblist macro 564
__R1 macro 564
_CEE_RUNOPTS environment variable
  specifying runtime options at invocation 120
, (comma) 123
/ (slash)
  specifying in PARM parameter 79
@DELETE service routine for preinitialization
  components of 515
  return/reason codes for 516
@EXCEPRTN service routine for preinitialization
  components of 517
  return/reason codes for 518, 519
@FREESTORE service routine for preinitialization
  components of 517
  return/reason codes for 517
@GETSTORE service routine for preinitialization
  components of 516
  return/reason codes for 517
@LOAD service routine for preinitialization
  components of 515
  return/reason codes for 515
@MSGRTN service routine for preinitialization
  components of 521
  return/reason codes for 521
& (ampersand) 126
= (equal) 80
' (apostrophe) 126

Numerics

16M line
  COBOL programs that run above must be reentrant 141

A

abend codes
  abend 4093, reason code 60 572
  CEEAUE_RETC field of CEEBXITA and 429
  generated by CEEBXITA and ABTERMENC(ABEND) 157
  in CICS 408
  short-on-storage condition and 405
ABEND command
  CEE3ABD callable service and 476
  CEESGL callable service and 476
  table of equivalent Language Environment services 476
abends
  ABEND command and 476
  CEEPIPI interface to preinitialization 501
  CICS
    assembler user exit and EXEC CICS ABEND 430
    EXEC CICS HANDLE ABEND and 407
    forcing database rollback 409
    nested conditions and 527
    short-on-storage condition and 405
  dump, requesting in CEEBXITA assembler user exit 430
  IMS, creating system abends under 418
  Language Environment-generated 198
  nested conditions and 240
  nested enclaves and
    created by C system() 531
    created by EXEC CICS LINK or EXEC CICS XCTL 527
    created by SVC LINK 528
  percolating
    in CEEBXITA 198, 427
    methods of percolating 198
  q_data_token and 283
  short-on-storage condition can cause 405
  sort and merge operations, occurring in
    in COBOL 589
    in PL/I 590
  specifying in CEEBXITA 426
  terminating with an abend 156
  TRAP runtime option and CEEBXITA 427
abort() function
  C condition handling semantics and 215
  HLL user exit and 436
  in a preinitialized environment 487
  SIGABRT and 212
ABTERMENC runtime option
  using to create system abends under MVS 418
  using to terminate with abend code or return and reason codes 156
ACCEPT statement 314
accessibility 599
  contact IBM 599
  features 599
add_entry
  return codes from 507
  syntax description 507
additional heap
  tuning the heap 176
AFHWL cataloged procedure 112
AFHWLG cataloged procedure 113
AFHWN cataloged procedure 114
AFHWRLK — Fortran library replacement tool 15
AIB (application interface block) 415
AIBTDLI interface to IMS 559
ALLOCATE command
  using with CALL command under TSO 87
  using with LOADGO command under TSO 89
AMODE
  assembler routines and 441
  C applications and 400
  C/C++AMODE considerations 14
  for CEEBXITA user exit 427
  heap storage 176
  in preinitialized routines 482
ampersand (&)
  how to specify in CEEXOPT 126
  using to pass by reference (indirect) 135
anywhere heap 173
apostrophe (')
  using in CEEXOPT 126
application
  invoking MVS executable programs from a z/OS UNIX shell 95
  link-editing using c89 94
  placing MVS load modules in the z/OS UNIX file system 95
  running
    from the z/OS UNIX shell 96
    under batch 96
    under MVS batch 97
application interface block (AIB) 415
AREA storage for PL/I 173
argc parameter for C
  C parameter passing styles and 566
ARGPARSE runtime option
  possible combinations of runtime options and program arguments 123
ARGSTR 130
argument
  case sensitivity of arguments under TSO, for C applications 569
  distinguishing program arguments from runtime options 123
  list format
    EXECOPS compiler option and 567
    EXECOPS runtime option and 565, 567
    how interactions of EXECOPS and PLIST compiler options affect 567
    how interactions of EXECOPS and PLIST runtime options affect 566
    PLIST compiler option and 567
    PLIST runtime option and 565

© Copyright IBM Corp. 1991, 2015

argument *(continued)*
passing
by reference 134
by value 134
C passing for operating systems and subsystems 135, 563
default HLL passing styles 135
directly 134
guidelines for writing callable services 561
indirectly 134
relationship to parameter list 134
specifying to an invoked routine which format to expect (C) 565
argv parameter for C
C parameter passing styles and 566
arithmetic
date calculations
examples illustrating multiple calls to CEESECS callable service 332, 335
overview 327
examples using 392
asis 569
ASMTDLI interface to IMS 415
ASSEMBLE file 296
assembler language
ASMTDLI interface 559
C as substitute for 579
COBOL parameter list format 569
EXEC DLI interface 559
macros 449, 450
CEECAA — generate a CAA mapping 453
CEEDSA — generate a DSA mapping 453
CEEENTRY — generate a Language Environment-conforming prolog 449
CEEFETCH — macro to dynamically load a Language Environment-conforming routine 459
CEELOAD — macro to dynamically load a Language Environment routine 456
CEEPPA — generate a PPA 454
CEERELES — macro to dynamically release a Language Environment-conforming routine 467
CEETERM — terminate a Language Environment-conforming routine 452
routines
calling conventions for 441
calling IMS PL/I routines from 416
compatibility with Language Environment 439
condition handling for 443
equivalent callable services for 476
example 472
invoking callable services from 476
main routines 441
assembler language *(continued)*
routines *(continued)*
no support for assembler main routines under CICS 440
program check, handling 265
subroutines 443
system services available to 476
system programming C considerations 583
assigning
message insert data 306
assistive technologies 599
atexit list
CEEPIPI and 487
ATTACH macro 478
automatic data
definition 162
how used in enclave 164

B

below heap
what used for 176
binder interface
c89 utility 93
bit manipulation routines 389
BPXBATCH program
invoking from TSO/E 97
running an executable z/OS UNIX file under batch 96
building freestanding applications
including alternate initialization routines for 579
MVS 580
BYADDR compiler option 140
BYVALUE compiler option
functions 140
required if SYSTEM(CICS) specified 571

C

C
AMODE/RMODE considerations 14
building linked list in 178
building system exit routines 583
calls to C under CICS 411
calls to C++ under CICS 411
case sensitivity of arguments under TSO 569
condition handling 211, 217
examples
CEE3CTY, CEEFMDT and CEEDATM 357, 358
CEE3CTY, CEEFMDT, CEE3MDS, CEE3MCS and CEE3MTS 358
CEE3RPH, CEECRHP, CEEGTST, CEECZST, CEEFRST and CEEDSHP 184
CEEDAYS, CEEDATE and CEEDYWK 346
CEEGTST and CEEFRST 178
CEEHDLR, CEEGTST, CEECZST and CEEMRCR 250, 251
CEEHDLR, CEESGL, CEEGQDT and CEEMRCR 259
C *(continued)*
examples *(continued)*
CEEMOUT, CEENCOD, CEEMGET, CEEDCOD and CEEMSG 317
CEEQCEN and CEESCEN 328
CEESECS and CEEDATM 336
CEESECS, CEESECI, CEEISEC and CEEDATM 340
CEESECS, multiple calls to 332
coding main routine to receive inbound parameter list 136, 140
freestanding MVS routines 580, 581
global condition handling model 211
interfaces to IMS from
list of DLI interfaces 559
LOADGO command considerations 89
LONGNAME compiler option 539
NOSTART compiler option 579
OPTIMIZE(2) compiler option 583
parameter passing, for operating systems and subsystems
PLIST and EXECOPS interactions 565, 568
styles 563
puts() function
freestanding routines and 580
RENT compiler option
making C routines reentrant with 142
specifying runtime options for 121
with _CEE_RUNOPTS 120
stderr
default destinations of 312
interleaving output with other output 313
redirecting output from 313
c89 utility
interface to the linkage editor 93
link-edit object modules 94
CALL command for TSO
ALLOCATE command and 87
case sensitivity of arguments when invoking C routine with 569
example using 87
syntax description 87
CALL IMS interfaces 559
CALL statement
for COBOL
callable service feedback code and 273
callable services
CEE3ABD — terminate enclave with an abend 147
CEE3CIB — return pointer to condition information block 194
CEE3CTY — set default country 355
CEE3DMP — generate dump 383
CEE3GRC — get the enclave return code 147
CEE3GRN — get name of routine that incurred condition 194
CEE3LNG — set national language 355

callable services *(continued)*
CEE3MCS — get default currency symbol 355
CEE3MDS — get default decimal separator 355
CEE3MTS — get default thousands separator 355
CEE3PRM and CEE3PR2— query parameter string 147
CEE3SPM — query and modify Language Environment hardware condition enablement 194
CEE3SRC — set the enclave return code 147
CEE3USR — set or query user area fields 383
CEECBLDY — convert date to COBOL Lilian format 325
CEECMI — store and load message insert data 295
CEECRHP — create new additional heap 169
CEECZST — reallocate (change size of) storage 169
CEEDATE — convert Lilian date to character format 325
CEEDATM — convert seconds to character timestamp 325
CEEDAYS — convert date to Lilian format 325
CEEDCOD — decompose a condition token 271
CEEDYWK — calculate day of week from Lilian date 325
CEEFMDA — get default date format 355
CEEFMDT — get default date and time format 355
CEEFMON — format monetary string 363
CEEFMTM — get default time format 355
CEEFRST — free heap storage 169
CEEFTDS — format date and time into character string 363
CEEGMT — get current Greenwich mean time 325
CEEGMTO — get offset from Greenwich mean time to local time 325
CEEGPID — retrieve Language Environment version and platform ID 383
CEEGQDT — retrieve q_data_token 259
CEEGTJS 384
CEEGTST — get heap storage 169
CEEHDLR — register user condition handler 194
CEEISEC — convert integers to seconds 325
CEELCNV — query locale numeric conventions 363
CEELOCT — get current local time 325
CEEMGET — get a message 295
callable services *(continued)*
CEEMOUT — dispatch a message 295
CEEMRCR — move resume cursor relative to handle cursor 194
CEEMSG — get, format, and dispatch a message 295
CEENCOD — construct a condition token 271
CEEQCEN — query the century window 325
CEEQDTC — query locale, date, and time conventions 363
CEEQRYL — query active locale environment 363
CEERAN0 — construct a condition token 383
CEESCEN — set the century window 325
CEESCOL — compare string collation weight 363
CEESECI — convert seconds to integers 325
CEESECS — convert timestamp to number of seconds 325
CEESETL — set locale operating environment 363
CEESGL — signal a condition 194
CEESTXF — transform string into collation weights 363
CEETEST — invoke debug tool 383
getting started with 385, 388
guidelines for writing 561
invoking under assembler 476
calloc() function 172
calls
dynamic call
C++calling C++ under CICS 411
calls between COBOL and VS COBOL II, under CICS 411
external references resolved at run time when made 15
static call
external references resolved at run time when made 15
in CICS COBOL applications 411
casting, when using R1 and osplist macros 564
cataloged procedure 103, 116
AFHWL (link-edit a Fortran program) 107
AFHWLG (link-edit and run a Fortran program) 107
AFHWN (change external names in conflict between C and Fortran) 107
AFHWRL (separate and link-edit Fortran object module) 107, 143
AFHWRLG (separate, link-edit and run object module) 107, 143
AFHXFSTA (Fortran reentrancy program) 143
CBCC (compile a C++ program) 105
CBCCL (compile, prelink, and link-edit a C++ program) 105
CBCCLG (compile, prelink, link-edit, and run a C++ program) 105
cataloged procedure *(continued)*
CBCG (run a C++ program) 106
CBCL (prelink and link-edit a C++ program) 105
CBCLG (prelink, link-edit, and run a C++ program) 106
CEEWG (load and run an HLL program) 108
CEEWL (link-edit an HLL program) 108
CEEWLG (link-edit and run an HLL program) 109
CXXFILT (invoke the demangle mangled names utility) 106
data set names 104
EDCC (compile a C program) 105
EDCCL (compile and link-edit a C program)
comparison with other cataloged procedures 105
using with system programming facilities 580
EDCCLG (compile, link-edit, and run a C program) 105
EDCCLIB (compile and maintain an object library) 106
EDCCPLG (compile, prelink, link-edit, and run a C program) 105
EDCDLLRN (invoke the DLL rename utility) 106
EDCDSECT (invoke the DSECT conversion utility) 106
EDCLDEF (invoke locale object utility) 106
EDCLIB (invoke object library utility) 106
EDCPL (prelink and link-edit a C program) 105
IBM-supplied
EDCLIB 573
IEL1C (compile a PL/I program) 107
IEL1CG (compile, load, and run a PL/I program) 107
IEL1CL (compile and link-edit a PL/I program) 107
IEL1CLG (compile, link-edit, and run a PL/I program) 108
IGYWCG (compile, load, and run a COBOL program) 105
IGYWCL (compile and link-edit a COBOL program) 105
IGYWCLG (compile, link-edit, and run a COBOL program) 105
IGYWPL (prelink and link-edit a COBOL program) 108
introduction to 103
invoking 103
JCL and 72, 78
modifying 115
overriding and adding DD statements
nullifying parameters of 115
rules for 115
overriding and adding to EXEC statements 115
overriding default options 103
quick reference of 105
specifying runtime options in 82

cataloged procedure *(continued)*
step names in 103
unit names 104
CBCC cataloged procedure 105
CBCCL cataloged procedure 105
CBCCLG cataloged procedure 105
CBCG cataloged procedure 106
CBCL cataloged procedure 105
CBCLG cataloged procedure 106
CBLOPTS runtime option
VS COBOL II compatibility and 129
CBLPSHPOP runtime option
EXEC CICS PUSH and EXEC CICS POP commands and 408
CBLTDLI interface to IMS 415
list of DLI interfaces 559
CC CLIST
C370LIB parameter 575
CEE Facility_ID 308
CEE_RUNOPTS environment variable
specifying runtime options at invocation 120
CEE3ABD — terminate enclave with an abend
ABEND command and 476
CEE3CIB — return pointer to condition information block 194
CEE3CTY — set default country
examples using
CEE3CTY with CEEFMDT and CEEDATM 357, 360
CEE3CTY with CEEFMDT, CEE3MDS, CEE3MCS and CEE3MTS 358
CEE3DMP — generate dump
CESE transient data queue and 410
description 383
SNAP command and 478
CEE3GRN — get name of routine that incurred condition
examples using 262, 265
CEE3LNG — set national language
messages and 309
CEE3MCS — get default currency symbol
examples using 358
CEE3MDS — get default decimal separator
examples using 358
CEE3MTS — get default thousands separator
examples using 358
CEE3PRM and CEE3PR2— query parameter string 147
CEE3SPM — query and modify Language Environment hardware condition enablement
advisory note regarding 561
condition handling, XUFLOW runtime option and 199
examples using 262, 265
CEE3USR — set or query user area fields 383
CEEAUE_A_AB_CODES
description 431
specifying abend codes in 427
CEEAUE_A_CC_PLIST 431
CEEAUE_A_OPTIONS 431
CEEAUE_A_WORK 431
CEEAUE_ABND 430
CEEAUE_ABTERM 429
CEEAUE_DUMP 430
CEEAUE_FBCODE 432
CEEAUE_FLAGS
CEEAUE_ABND field of 430
CEEAUE_ABTERM field of 429
CEEAUE_DUMP field of 430
CEEAUE_STEPS field of 431
format 429
CEEAUE_FUNC 429
CEEAUE_LEN 429
CEEAUE_RETC
description 429
relationship to CEEAUE_ABND 429, 430
relationship to CEEAUE_RSNC 429, 430
CEEAUE_RSNC
description 429
relationship to CEEAUE_ABND 430
relationship to CEEAUE_RETC 430
CEEAUE_STEPS 431
CEEBINT HLL user exit
description 147
functions 422
interactions with CEEPIPI 487
interface to 436
languages it can be coded in 435
terminating enclave created by 436
user word parameter of, and CEEAUE_USERWD 436
when invoked 424
CEEBLDTX utility
error messages 302
using to create message files 296
CEEBXITA assembler user exit
abends and
requesting 426
specifying codes to be percolated 427
actions taken if errors occur within the exit 427
AMODE/RMODE considerations 427
application-specific 421
behavior of
during enclave initialization 422, 424
during enclave termination 425, 426
during process termination 426
description 147
EXEC CICS commands that cannot be used with 408
functions 421
IMS and 418
installation-wide 421
interactions with CEEPIPI 487
interface to
diagram of 427
modifications to, rules for making 427
PLIRETC and 409
specifying runtime options in 431
TRAP runtime option and 427
CEEBXITA assembler user exit *(continued)*
when invoked 424
work area for 431
CEECAA assembler macro
relationship to CEEENTRY 449
syntax description 453
CEECMI — store and load message insert data
assigning values to message insert 306
CEECXITA assembler user exit 409
CEEDATE — convert Lilian date to character format
examples using 346
CEEDATM — convert seconds to character timestamp
examples using
examples with CEE3CTY and CEEFMDT 357, 360
examples with CEESECS 336, 338
examples with CEESECS, CEESECI and CEEISEC 340
CEEDAYS — convert date to Lilian format
examples using 346
CEEDCOD — decompose a condition token
examples using 317
testing equivalent tokens 273
CEEDOPT
specifying runtime options for MVS 82
CEEDSA assembler macro
relationship to CEEENTRY 449
syntax description 453
CEEDSASZ label 454
CEEDYWK — calculate day of week from Lilian date
examples using 346
CEEENTRY assembler macro
relationship to CEECAA 449
relationship to CEEDSA 450
relationship to CEEPPA 449
relationship to CEETERM 449
syntax description 449
CEEFETCH assembler macro 459
CEEFMDA — get default date format 355
CEEFMDT — get default date and time format
examples using
examples with CEE3CTY and CEEDATM 357, 360
examples with CEE3CTY, CEE3MDS, CEE3MCS and CEE3MTS 358
CEEFMON — format monetary string
examples using 364, 365
CEEFMTM — get default time format 355
CEEFTDS — format date and time into character string
examples using 366, 368
CEEGMT — get current Greenwich mean time 326
CEEGMTO — get offset from Greenwich mean time to local time 326

CEEGPID — retrieve the Language Environment version and platform ID 383, 384
CEEGQDT — retrieve q_data_token
  examples using 259
CEEHDLR — register user condition handler 206
  assembler routines and 443
  condition handling example 217
  condition handling model and 205
  condition handling terminology 212
  examples using
    assembler example 265, 270
    examples with CEE3SPM, CEE3GRN and CEEMOUT 262, 265
    examples with CEEGTST, CEECZST and CEEMRCR 250, 253
    examples with CEESGL, CEEGQDT and CEEMRCR 259
  restrictions on using with various EXEC CICS commands 407, 476
  SETRP command and 476
  STAX command and 476
  syntax description of user-written condition handlers 236, 238
CEEHDLU — unregister user condition handler
  EXEC CICS HANDLE ABEND command and 476
  SETRP command and 476
  STAX command and 476
  syntax description of user-written condition handlers 236, 238
CEEISEC — convert integers to seconds
  examples using 340
CEELCNV — query locale numeric conventions
  examples using 369, 371
CEELOAD assembler macro 456
CEELOCT — get current local time
  examples using 327
CEELRR — initialize or terminate library routine retention 446
CEEMGET — get a message
  examples using 317
  relationship to condition tokens and other message services 272
CEEMOUT — dispatch a message
  examples using
    examples with CEEHDLR, CEE3SPM and CEE3GRN 261, 265
    examples with CEENCOD, CEEMGET, CEEDCOD and CEEMSG 317
  relationship to condition tokens and other message services 272
  WTO command and 478
CEEMRCR — move resume cursor relative to handle cursor
  examples using
    examples with CEEHDLR, CEEGTST and CEECZST 250, 253
CEEMRCR — move resume cursor relative to handle cursor *(continued)*
  examples using *(continued)*
    examples with CEEHDLR, CEESGL and CEEGQDT 259
  resume action and 206
CEEMSG — get, format, and dispatch a message
  examples using 317
  relationship to condition tokens and other message services 272
CEENCOD — construct a condition token
  examples using 317
CEEOPTS DD 70, 84
CEEOPTS DD statement
  restrictions 128
  using 127
CEEPPA assembler macro
  relationship to CEEENTRY 449
  syntax description 454
CEEQCEN — query the century window
  examples using 328, 331
CEEQDTC — query locale, date, and time conventions
  examples using 372, 374
CEEQRYL — query active locale environment
  examples using 377, 381
CEERELES assembler macro 467
CEEROPT
  description 119
  specifying runtime options for MVS batch 82
CEESCEN — set the century window
  examples using 328, 331
CEESCOL — compare string collation weight
  examples using 375, 376
CEESECI — convert seconds to integers
  examples using 340
CEESECS — convert timestamp to number of seconds
  examples using CEESECS
    C 332
    COBOL 333
    PL/I 335
  examples with CEEDATM
    C 336
    COBOL 337
    PL/I 338
  examples with CEESECI, CEEISEC and CEEDATM
    C 340
    COBOL 342
    PL/I 344
CEESETL — set locale operating environment
  examples using 369, 374, 377, 378
CEESGL — signal a condition
  ABEND command and 476
  description of signals 196
  examples using 259
  EXEC CICS HANDLE ABEND command and 476
  HLL-specific condition handlers and 198
CEESGL — signal a condition *(continued)*
  relationship to condition tokens and message services 272
  SETRP command and 476
  STAX command and 476
  TRAP runtime option does not affect 198
  user-written condition handlers and 198
CEESTART
  preinitialization and 481
CEESTXF — transform string into collation weights
  examples using 379, 381
CEETDLI interface to IMS 415
  list of DLI interfaces 559
CEETERM assembler macro
  relationship to CEEENTRY 449
  syntax description 452
CEETEST — invoke debug tool 383
  condition handling and 205
CEEUOPT
  CEEUOPT ASSEMBLE 120
  CEEXOPT macro and 126
  description 120
  specifying runtime options for MVS 82
CEEWG cataloged procedure (load and run a program) 108
CEEWL cataloged procedure (link-edit a program) 108
CEEWLG cataloged procedure (link-edit and run a program) 109
CEEXOPT macro
  description 126
  sample of CEEUOPT modified using 126
  usage notes for 126
CEEXPIT macro 483
CEEXPITS macro 484
CEEXPITY macro 484
CESE transient data queue
  CEEMOUT and CEE3DMP output directed here 403
  format 409
  message handling and 311
CHAP command 476
CICS
  callable service behavior under availability of callable services 403
  CBLPSHPOP runtime option and 408
  CESE transient data queue and 403
  CICS region 397
  CICS run unit
    behavior in nested enclave 527
    compared to Language Environment enclave 398
  COBOL parameter list formats 569
  coding main routines to receive parameters 138
  condition handling for 406, 409
  I/O restrictions in 398
  link-editing for 400
  list of interfaces to IMS that work from 559
  message and dump output file 403

CICS *(continued)*
message format 409
message handling for 409
multitasking for 399
OS/VS COBOL compatibility considerations 404
PLIRETC support 399, 409
PLIRETV support 399
PLIST and EXECOPS interactions 565, 568
processing program table (PPT) 398
program control table (PCT) 398
reentrancy and 141
relinking PL/I applications 25
required level of 397
run-time output file 409
specifying runtime options for 401
storage and 404
SYSTEM setting 571
terminology 397
transaction 397, 398
transaction rollback 409
translator 399, 408
CLISTs for TSO
case sensitivity of args when invoking a C routine with 569
CMOD 85, 87
CLOSE command 478
CMOD CLIST 85, 87
COBOL
building a linked list in 178
can choose between static and dynamic calls under 15
condition handling 219, 224
constructing and dispatching a message for the significance condition 262, 265
examples
CEE3CTY, CEEFMDT and CEEDATM 358
CEE3RPH, CEECRHP, CEEGTST, CEECZST, CEEFRST and CEEDSHP 184, 186
CEEDAYS, CEEDATE and CEEDYWK 346, 348
CEEFMON — format monetary string 364
CEEFTDS — format date and time into character string 366
CEEGTST and CEEFRST 178
CEEHDLR, CEE3SPM, CEE3GRN and CEEMOUT 261, 265
CEEHDLR, CEEGTST, CEECZST and CEEMRCR 253
CEELCNV and CEESETL 369
CEEMOUT, CEENCOD, CEEMGET, CEEDCOD and CEEMSG 319
CEEQCEN and CEESCEN 330
CEEQDTC and CEESETL 372
CEESCOL — compare string collation weight 375
CEESECS and CEEDATM 337
CEESECS, CEESECI, CEEISEC and CEEDATM 342
CEESECS, multiple calls to 333
CEESETL and CEEQRYL 377
COBOL *(continued)*
examples *(continued)*
CEESTXF and CEEQRYL 379
coding main program to receive inbound parameters 136, 140
GOBACK statement generates return code 154
interfaces to IMS from list of DLI interfaces 559
ISPF 593
non-CICS OS/VS COBOL programs supported in single enclave only 526
order of program arguments and runtime options 129
OS/VS COBOL under CICS 404
parameter list formats 569
parameter passing style in Language Environment 135
preinitialization services 488
RENT compiler option 142
run-time options, specifying from 119, 127
STOP RUN statement
CEEBXITA assembler user exit and 423
effect SVC LINK has on 480
preinitialized environment and 487
return codes and 154
SVC LINK considerations for RES routines 480
comma (,) 123
command
syntax diagrams xvii
command processor parameter list (CPPL)
coding a main routine to receive 136
PLIST, EXECOPS and 565, 567
COMMAREA
COBOL user-written condition handlers and 408
common anchor area (CAA)
writing assembler routines 441
common environment, introduction 4
compatibility
assembler 439
CICS 400
compatibility, downward 10
condition
callable service feedback code and 272, 273
definition 196
divide-by-zero
examples illustrating condition handling for 259
nested 527, 529
severity
CEEBXITA assembler user exit and 430
COBOL condition handling 220
condition token and 274
ERRCOUNT runtime option and 201
how to determine in a message 201, 308
condition *(continued)*
severity *(continued)*
TERMTHDACT runtime option and 204
unhandled conditions and 156
condition handler
C signal handlers
CEESGL callable service and 198
description 213
TRAP runtime option and 197
description 206
HLL semantics
percolation and 206
SORT and MERGE operations 588
TRAP runtime option and 198
PL/I ON-units
CEESGL callable service and 198
SORT and MERGE operations 590
TRAP runtime option and 197
user-written
accessing a q_data structure and moving the resume cursor from 259
C raise() function and 212, 213
C signal() function and 213
CEESGL callable service and 198
coding 235, 238
constructing message string when significance condition occurs 261
EXEC CICS commands that cannot be used with 407
in ILC applications 239
in nested condition handling 239
introduction to user-written condition handlers 205
registering with CEEHDLR callable service 205
registering with USRHDLR runtime option 238
role in Language Environment condition handling model of 205
sort and merge operations and 588, 590
syntax for 236
TRAP runtime option and 198
condition handling 272
assembler routines 443
basic condition handling scenarios 207, 211
C semantics 211, 217
default actions for C conditions 211
example of 215, 217
global error table and 211
scenario of 214
signal() function and 213
callable service feedback code and 272, 273
callable services for
examples using CEEHDLR, CEEGTST, CEECZST and CEEMRCR 250, 253

condition handling *(continued)*
callable services for *(continued)*
examples using CEEHDLR, CEESGL, CEEGQDT and CEEMRCR 259
usage scenario 249
CICS, under 407
COBOL
ON SIZE ERROR clause 219
semantics of 219, 224
coding 235, 238
default actions 220
examples 241, 270
Fortran 224, 225
global model provided by C 211
IMS, under 443
introduction to 193, 207
nested enclaves
created by C system() 530, 531
created by EXEC CICS LINK or EXEC CICS XCTL 527
created by SVC LINK 528
with a PL/I fetchable main 531, 532
PL/I 226, 228
sort and merge considerations 588
stack frame-based model provided by Language Environment
details of 207
overview 193, 194, 207
terminology 196
user exits and 409
user-written condition handler 205
using symbolic feedback code in 275, 280
when to use 193
condition manager
C signal handler and 217
percolating abends and 220
stack frame collapse and 224
symbolic feedback code and 276
thread initialization and 148
condition step 199, 201
condition token 271, 284
callable service feedback code and 272, 273
condition handling model and 193
messages and 308
constructed reentrancy 141
contact
z/OS 599
continuations 126
control block
CAA 441
COPY file 296
critical error message (severity 4) 308
cross system product (CSP) 564
csplist macro 564
ctdli() interface to IMS 415
CXIT control block
CEEAUE_A_AB_CODES field of 427
CEEAUE_A_CC_PLIST field of 431
CEEAUE_A_OPTIONS field of 431
CEEAUE_A_WORK field of 431
CEEAUE_FBCODE field of 432
CEEAUE_FLAGS field of
CEEAUE_DUMP field of 430
CXIT control block *(continued)*
CEEAUE_FLAGS field of *(continued)*
CEEAUE_STEPS field of 431
format of the 429
CEEAUE_FUNC field of 429
CEEAUE_LEN field of 429
CEEAUE_USERWD field of
user word parameter of CEEBINT and 436
CXXBIND EXEC 554
CXXFILT cataloged procedure 106
CXXMOD EXEC 554

D

data types
guidelines for, when writing callable services 561
database rollback
assembler user exit and DB2 413
assembler user exit and IMS 418
how CICS handles a 409
date and time
services, summary 325
TIME command and 478
DB2
AMODE/RMODE considerations 14
DD statement
data sets and
defining data sets for the linkage editor 72
defining data sets for the loader 80
overriding in cataloged procedures 115, 116
proper format in JCL 81
Debug Tool
C condition handling example of 217
CEEBINT and 436
CEEBXITA and 426
condition handling model and 205
debugging
ABPERC runtime option and 198
definition side-deck 58
DELETE command
EXEC CICS command 476
host service 478
DELETE service routine for preinitialization
components of 515
return/reason codes for 516
DEQ 476
dereferencing 563, 564
DETACH 476
DFHECI (EXEC CICS interface stub) 400
DFHELII (EXEC CICS interface stub) 400
DFHPL10I (replaced by DFHELII) 400
DFSORT (Data Facility Sort)
condition handling for 588, 591
native invocations of 587, 588
SVC LINK and 588
user exits associated with 588
DISPLAY statement
default file for 314
DL/I call 559
DLL code 44
DLLs (dynamic link libraries) 43
application 44
applications 44
binding a DLL 58
binding a DLL application 59
C or C++ example 46
calling explicitly 45
calling implicitly 45
COBOL/C example 49
complex 66
creating 66
creating 53
#pragma export 54
C 53
description 53
exporting functions 54
entry point 64
example 63
freeing 53
function 44
load-on-call 45
loading 51
managing the use of 51
performance 66
restrictions 64
sharing among application executable files 52
using 60
variable 44
downward compatibility 10
DSA (dynamic save area)
register 13 and 441, 442
dump
CEEBXITA assembler user exit and 426, 430
for CICS 404, 410
Language Environment
SNAP command and 478
dynamic call
C, under CICS 411
C++, under CICS 411
external references resolved at run time when made 15
VS COBOL II, under CICS 411

E

EDC facility ID 308
EDCC cataloged procedure 105
EDCCL cataloged procedure
comparison with other cataloged procedures 105
using in system programming C 580
EDCCLG cataloged procedure (compile, link-edit and run a C program) 105
EDCCLIB cataloged procedure (compile C program and invoke object library utility) 106, 573
EDCCPLG cataloged procedure (compile, prelink, link-edit and run a C program) 105
EDCDLLRN cataloged procedure 106
EDCDSECT cataloged procedure 106
EDCLDEF cataloged procedure (invoke locale object utility) 106
EDCLIB cataloged procedure (invoke object library utility) 106, 573

EIB (exec interface block)
calls within same HLL and 411
user-written condition handlers, EXEC CICS commands and 408
enablement
condition handling step
definition of exceptions 196
discussion of 197, 199
TRAP runtime option and 197
enclave
definition 164
HLLs and 164, 165
main routines and 164
management of Language Environment resources 165
multiple 165
nested
created by C system() function 525, 530
created by EXEC CICS LINK or EXEC CICS XCTL 525, 526, 527
created by SVC LINK 525, 528
DFSORT and SVC LINK 588
enclave with a PL/I fetchable main routine 531, 532
MSGFILE ddnames and 311
relationship with C main functions 164
relationship with COBOL run units 164
relationship with processes 163
role in Language Environment program management model 165
subroutines and 164
termination
behavior 157
with abend 430
with assembler routine 443
with HLL user exit 436
ENQ 476
Enterprise PL/I for z/OS
z/OS UNIX support same as for C++ 93
entry point
defining, when link-editing a fetchable load module 25
ENV runtime option
C interface to IMS 415
ENVAR runtime option 402
using to pass switches and tagged information into applications 402
environment, common 4
equality, testing a condition token for 273
equivalence, testing a condition token for 273
ERRCOUNT runtime option
condition handling model and 201
error message (severity 2) 308
ESD map of defined and longnames 545
ESTAE
sort and merge condition handling 589
EVENTS command 478
examples
building a condition token, in C 259
CALL command for TSO 87
examples *(continued)*
CEE3CTY — set default country
with CEEFMDT 357, 360
with CEEFMDT and CEEDATM 357, 360
with CEEFMDT, CEE3MDS, CEE3MCS, and CEE3MTS 358
CEEDATE — convert Lilian date to character format
with CEEDAYS and CEEDYWK 346
CEEDATM — convert seconds to character format
with CEE3CTY and CEEFMDT 357, 360
with CEESECS callable service 336, 338
with CEESECS, CEESECI, and CEEISEC 340
CEEDAYS — convert date to Lilian format
with CEEDATE and CEEDYWK 346
CEEDCOD — decompose a condition token
with CEEMOUT, CEENCOD, CEEMGET, and CEEMSG 262, 265
CEEDYWK — calculate day of week from Lilian date
with CEEDATE and CEEDAYS 346
CEEFMDT — get default date and time format
with CEE3CTY and CEEDATM 357, 360
CEEFMON — format monetary string 364, 365
CEEFTDS — format date and time into character string 366, 368
CEEHDLR — register user-written condition handler
calling from assembler 265, 270
with CEE3SPM, CEE3GRN, and CEEMOUT 261, 262
with CEEGTST, CEECZST and CEEMRCR 250, 253
with CEESGL, CEEGQDT, and CEEMRCR 259
CEEISEC — convert integers to seconds
with CEESECS, CEESECI, and CEEDATM 340
CEELCNV — query locale numeric conventions
with CEESETL 369, 371
CEEMGET — get a message
with CEEMOUT, CEENCOD, CEEDCOD, and CEEMSG 262, 265
CEEMOUT — dispatch a message
with CEEHDLR, CEE3SPM, and CEE3GRN 262, 265
with CEENCOD, CEEMGET, CEEDCOD, and CEEMSG 261, 262
examples *(continued)*
CEEMSG — get, format, and dispatch a message
with CEEMOUT, CEENCOD, CEEMGET, and CEEDCOD 262, 265
CEENCOD — construct a condition token
with CEEMOUT, CEEMGET, CEEDCOD, and CEEMSG 262, 265
CEEQCEN — query century window 328
CEEQDTC — query locale, date, and time conventions
with CEESETL 372, 374
CEEQRYL — query active locale environment
with CEESETL 377, 378
with CEESTXF 379, 381
CEESCEN — set century window 328
CEESCOL — compare string collation weight 375, 376
CEESECI — convert seconds to integers
with CEESECS, CEEISEC, and CEEDATM 340
CEESECS — convert timestamp to number of seconds
multiple calls to 332, 335
using CEEDATM with 336, 338
with CEESECI, CEEISEC, and CEEDATM 340
CEESETL — set locale operating environment
with CEELCNV 369, 371
with CEEQDTC 372, 374
CEESIMOD — perform modular arithmetic 392
CEESSLOG — calculate logarithm base e 393
CEESTXF — transform string into collation weights
with CEEQRYL 379, 381
ENTRY statement for MVS 579
INCLUDE statement for MVS
building freestanding MVS routine 580
including alternate initialization routines
MVS 579
invoking the prelinker
from TSO 551
LINK command 84
link-editing a fetchable load module 25
linking and running under TSO 83
LOADGO command 88
math services 392
overriding parameters in CEEWLG cataloged procedure 115
querying and setting the century window 328
relinking PL/I applications 24

EXCEPRTN service routine for preinitialization
components of 517
return/reason codes for 518, 519
exceptions
historical definition 196
Language Environment definition 196
EXEC CICS command
ABEND 407, 408, 430
DELETE 476
FREEMAIN 404, 478
GETMAIN 404, 478
HANDLE ABEND
assembler user exit and 408
CEEHDLR callable service and 476
CEEHDLU callable service and 476
CEESGL callable service and 476
table of equivalent Language Environment services 476
TRAP runtime option and 407
user-written condition handlers and 407
HANDLE AID
assembler user exit and 408
user-written condition handlers and 407
HANDLE CONDITION
assembler user exit and 408
user-written condition handlers and 407
IGNORE CONDITION 407, 408
LINK
assembler routines and 478
behavior of nested enclaves created by 526
C and 411
C++ and 411
OS/VS COBOLand 411
program management model and 398
run-time options and 527
LOAD 476
POP HANDLE
assembler user exit and 408
user-written condition handlers and 407
PUSH HANDLE
assembler user exit and 408
user-written condition handlers and 407
RETURN 411
XCTL
assembler routines and 478
behavior of nested enclaves created by 526, 527
C and 411
C++ and 411
OS/VS COBOLand 411
program management model and 398
run-time options and 527
EXEC statement for MVS
EXECOPS runtime option and 71
invoking linkage editor 72
EXEC statement for MVS *(continued)*
invoking loader 79
overriding, in cataloged procedures 115
syntax for executing an application 81
syntax for specifying runtime options 71
EXECOPS compiler option
MVS argument list format and 567
EXECOPS runtime option
CEENTRY macro and 451
considerations when specifying runtime options 129
EXEC statements in JCL and 71
MVS argument list format and 565
TSO LOADGO command and 89
EXECs, IBM-supplied
CXXMOD 554
executable files
invoking MVS executable programs from a z/OS UNIX shell 95
placing MVS load modules in the z/OS UNIX file system 95
running
from the z/OS UNIX shell 96
under batch 96
under MVS batch 97
EXHIBIT for OS/VS COBOL
default output file of 314
no support for, under CICS 314
EXIT PROGRAM statement 478, 480
exit() function 215
C condition handling scenario and 214
CEEBINT HLL user exit and 436
in a preinitialized environment 487
exporting functions 44
external data
constructed reentrancy and 141, 142
preinitialization and 485
scope of, in Language Environment program management model 164, 165
Extra Performance Linkage (XPLINK) 29

F

facility ID
each language component has a 307
part of condition token 274, 307
part of messages 308
feedback code
condition manager and 272
condition token and 272, 273
guidelines for writing callable services and 561
in callable services 272
omitting 273
symbolic feedback code in condition handling 275, 280
fetch
C fetching C 411
FETCH statement
fetchable main
discussion of 531, 532
reentrancy considerations of 532
FETCH statement *(continued)*
link-editing fetchable load modules 25
file
executable
placing MVS load modules in the z/OS UNIX file system 95
running 94
fix-up and resume action
compared to percolate, promote and resume actions 207
fork()
MSGFILE runtime option and 312
Fortran
AFHWL — link a Fortran program 112
AFHWLG — link and run a Fortran program 113
AFHWN — resolve Fortran and C name conflicts 114
AFHWRLK — Fortran library replacement tool 15
ARGSTR 130
condition handling 224, 225
error message unit and Language Environment 314
I/O statements, using 314
library module replacement tool 15
making Fortran programs reentrant 142
order of program arguments and runtime options 130
parameter passing style in Language Environment 130
replacing Fortran modules 15
resolving Fortran and C name conflicts 114
run-time options, specifying 119, 127
setting user return codes 155
vector instruction exceptions 224
fprintf function 313
FREEMAIN 478
freestanding application
alternate initialization routines for 579
building
MVS 580, 582
FREESTORE service routine for preinitialization
components of 517
return/reason codes for 517
freopen 313
function call for C 195
functions 44
exported 44
imported 44

G

genxlt
CLIST 91
utility
TSO 91
GET command 478
GETMAIN 478

GETSTORE service routine for
preinitialization
components of 516
return/reason codes for 517
global assembler user exit 421
global error table 211

H

HANDLE ABEND EXEC CICS command
assembler user exit and 408
CEEHDLR and 476
CEEHDLU and 476
CEESGL and 476
table of equivalent Language Environment services 476
TRAP runtime option and 407
user-written condition handlers and 407
handle cursor
promote action and 237
header files
stdlib.h and the __R1 and __osplist macros 564
symbolic feedback code files and 276, 278
heap pool
improving performance 174
heap pools
applications which should use 174
IBM-supplied defaults for CICS 402
IBM-supplied defaults for non-CICS 124
improve performance of heap storage allocation 174
tuning heap storage 176
heap storage
AMODE considerations of 176
callable services for
relationship to GETMAIN/FREEMAIN host services 476, 478
examples of HLL data stored in 172
heap element
heap storage model and 172, 173, 176, 187
heap increment
when allocated 173
heap storage model 172, 177
initial heap segment 173
heap storage model and 176
performance and 176
when allocated 173
leaks 174
lifetime of 172
program management model and 165
RPTSTG runtime option and 176
threads and 172
tuning 176
HEAPCHK runtime option
use to identify storage leaks 174
HEAPPOOLS
improving performance 174

I

IBM Facility_ID 308
iconv
CLIST 91
utility
TSO 90
IEL1C cataloged procedure (compile a PL/I program) 107
IEL1CG cataloged procedure (compile, load and run a PL/I program) 107
IEL1CL cataloged procedure (compile and link-edit a PL/I program) 107
IEL1CLG cataloged procedure (compile, link-edit and run a PL/I program) 108
IGYWPL cataloged procedure (prelink and link-edit a COBOL program) 108
IGZ facility ID
part of message 308
IGZERRE 481
ILBOSTP0 481
ILC (interlanguage communication)
benefits of Language Environment support 193
link-editing ILC applications 10
overlay programs and 443
IMS (Information Management System)
assembler calling PL/I under 416
C considerations 415, 564
CEETDLI interface 415
coding a main routine to run under 138
condition handling under 417
link-edit considerations 417
list of DLI interfaces 559
OPTIONS(BYADDR) and 416
OPTIONS(BYVALUE) and 416
PLIST considerations
PLIST and EXECOPS interactions 567
PLIST(IMS) 138
requirement for pre-loaded routines 141
SYSTEM(IMS) compiler option and 140, 416
how parameters are passed under 571, 572
table listing interfaces to 559
INCLUDE file 296
INCLUDE statement
for MVS
alternate initialization routines and 579
application-specific assembler user exit and 422
cannot use with loader 78
freestanding applications and 580
SYSLIB data set and 74
SYSLIN data set and 73
using linkage editor with 76
informational messages 308
initial heap
heap storage model and 176
initial stack segment
performance and 171
initializing 441
alternate initialization routines 579
initialization routines 7, 74
initializing *(continued)*
nested enclave
CEEBXITA's function code for 429
using CEEBXITA assembler user exit for
CEEBXITA behavior 422
function code for 429
input/output
CICS restrictions 398
Language Environment default message file attributes 310, 311
insert data, message
user-created
assigning values to 306
installation-wide assembler user exit 421
interface validation exit 17
interleaved
output 313
intrinsic functions 175
ISI (instance specific information)
callable service feedback code and 275
description 272
q_data_token 283
ISPF (Interactive System Productivity Facility) 587, 593
C/C++ AMODE/RMODE considerations 14

K

keyboard
navigation 599
PF keys 599
shortcut keys 599

L

L-names
LIBRARY control statement and 547
mapping to S-names 549
RENAME control statement and 548
UPCASE prelink option and 556
library call processing
data sets required by the linkage editor and 74
LIBRARY statement and 76
linkage editor options and 77
NCAL link-edit option and 74, 77
library module replacement tool, Fortran 15
library routine retention 444
Library Search Order 81
LIBRARY statement
cannot use with loader 78
prelinker and 547
using with linkage editor 76
Lilian date
calculate day of week from (CEEDYWK) 325
convert date to (CEEDAYS) 325
convert to character format (CEEDATE) 325
return current local date as a (CEELOCT) 325

Lilian date *(continued)*
return GMT as a (CEEGMT) 325
LINK command for TSO
example using 85
how handled by Language Environment 478
options for 89
syntax description 84
link-editing
application programs using c89 94
for MVS
CICS considerations 400
diagram of linkage editor processing 72
example of 74, 76
IMS considerations 417
input to the linkage editor 72
options 77
using AFHWL cataloged procedure to link a Fortran program 112
using AFHWLG cataloged procedure to link and run a Fortran program 113
using CEEWL cataloged procedure to link a program 108
using CEEWLG cataloged procedure to link and run a program 109
using INCLUDE statement to include additional modules as input 76
using LIBRARY statement to specify additional libraries to be searched 76
writing JCL for the linkage editor 72
for TSO
CMOD CLIST invokes LINK command 85, 87
CXXMOD EXEC prelinks and links 554
invoking the linkage editor using the LINK command 84
LINK-and-CALL method of processing 84
linkage editor
cross-reference variables 77
generate listing of control statements 77
generating a module map 77
input to 71
invoking with the CMOD CLIST (TSO) 85, 87
messages, where they go 77
module name 75
options for MVS
LIST | NOLIST 77
PRINT | NOPRINT 77
RENT | NORENT 77, 142
XREF | NOXREF 77
options for TSO
CALL | NOCALL 89
LET | NOLET 89
PRINT(dat_set_name) 89
RES | NORES 89
SIZE(integer) 89
writing JCL for 72
LOAD service routine for preinitialization
components of 515
return/reason codes for 515
LOADGO command for TSO
ALLOCATE command and 89
example using 89
EXECOPS runtime option and 89
options for 89
specifying runtime options in 88, 89
syntax description 88
loading
for MVS
diagram of loader processing 78
example of 80
input to the loader 77
options 79
standard data sets for 80
using CEEWG to load and run a program 108
writing JCL for the loader 79
for TSO
LINK command syntax description 84, 85
LOADGO command syntax description 89
necessary data sets 89
options 89
library call processing
data sets required by the loader and 80
local
data 164
locale callable services 363
LONGNAME compiler option 539
longname support 573
LPA (link pack area)
reentrancy considerations 143
RES loader option and 79, 90

M

macro
__csplist 564
__osplist 564
__pcblist 564
__R1 564
CEECAA
relationship to CEEENTRY 449
syntax description 453
CEEDSA
relationship to CEEENTRY 449
syntax description 453
CEEENTRY
relationship to CEECAA 449
relationship to CEEDSA 450
relationship to CEEPPA 449
relationship to CEETERM 449
syntax description 449
CEEFETCH 459
CEELOAD 456
CEEPPA
relationship to CEEENTRY 449
syntax description 454
CEERELES 467
CEETERM
relationship to CEEENTRY 449
syntax description 452
macro *(continued)*
CEEXOPT
sample of CEEUOPT modified using 126
usage notes for 126
CEEXPIT 483
CEEXPITS 484
CEEXPITY 484
main routine
assembler main
example of a simple 472, 473
example of main calling a sub 473
register values on entry to 441
determining 164
nested enclave considerations 525
position in Language Environment program management model 164
preinitialization of 482, 490, 491
management of resources 165
management, program 161, 165
map heading 576
mapping
L-names to S-names 549
math services
about 389
OS PL/I V2R3 26
member heading 576
MERGE (COBOL verb)
condition handling considerations 588, 591
overview 587
user exit triggered by 588
message
condition token and 307, 308
directing to an I/O device 311
example 308
facility ID 307
message prefixes 308
severity 308
codes and values 308
using in your application 311
message file
C stderr and stdout output and 313
CICS considerations 311
COBOL condition handling semantics and 220
FortranI/O statements 314
Language Environment's default destinations 310
nested enclave considerations 311, 535
PL/I I/O statements 316
specifying ddname of 311
using CEEBLDTX to assemble 296
message handling
CESE transient data queue and 409
relationship to fc parm of callable services 272, 273
specifying ddname of message file 311
message module table 296
models, architectural
program management 161, 165
MSGFILE runtime option 220
COBOL condition handling semantics and 220

MSGFILE runtime option *(continued)*
default destinations under different operating systems 311
different treatment under CICS 403
POSIX runtime option and 311
specifying ddnames across nested enclaves 311
under z/OS UNIX 311
MSGRTN service routine for preinitialization
components of 521
return/reason codes for 521
multiple
enclaves 165
processes 164
MVS (Multiple Virtual System)
running for
specifying runtime options for 82, 120
writing JCL to run an application 80, 81

N

NAB (next available byte)
assembler main routine and 441
assembler subroutine and 441
CEEENTRY macro and 450
name conflicts, resolving
between Fortran and C 17
between static common blocks 16
using AFHWN cataloged procedure 114
national language support (NLS)
message handling and 309
natural reentrancy 141
navigation
keyboard 599
nested conditions 239
nonoverrideable 431
Notices 603

O

object library utility 573
adding object modules 573
deleting object modules 573
example under MVS batch 573
listing the contents 573
under batch 573
under TSO 575
omitted parameter 273
condition manager reaction to 273
considerations when writing a callable service 561
ON EXCEPTION clause 219
ON SIZE ERROR clause 219, 224
OPEN command 478
OPTIONS(BYADDR)
assembler calling PL/I under IMS 416, 571
description 140
specifying with OPTIONS(BYVALUE) is an error 140
SYSTEM(CICS) and 571
when it is the default 140
OPTIONS(BYVALUE)
description 140
IMS considerations 416, 571
OPTIONS(NOEXECOPS) and 140
rules for specifying 140
specifying with OPTIONS(BYADDR) is an error 140
SYSTEM(CICS) and 571
when it is the default 140
OS ATTACH macro 478
osplist macro 564
overflow 199, 212, 224
condition
C SIGFPE condition and 211
COBOL ON SIZE ERROR clause and 224
overlay
programs 443
overrideable/nonoverrideable 431

P

parallel processing 165
parameter
list
accessing by using macros 563, 564
assembler 443
relationship to argument list 134
list format
effect of EXECOPS compiler option on 567, 568
effect of EXECOPS runtime option on 565, 567
how interaction of EXECOPS and PLIST compiler options affects 567, 568
how interaction of EXECOPS and PLIST runtime options affects 566, 567
PLIST runtime option and 565, 568
list pointer 135
nullifying in cataloged procedures 115
passing
by reference 134
by value 134
C passing styles 563
directly 134
indirectly 134
passing styles permitted by Language Environment 135, 561
PARM statement 77
pcblist macro 564
PCT (Program Control Table) 405
percolate action
C condition handling and 215
COBOL condition handling and 220
compared to promote and resume actions 206
condition handling model and 200
user-written condition handler syntax for 237
persistent C environment 583
PL/I
ALLOCATE statement 172
PL/I *(continued)*
BYADDR 571
functions 140
BYVALUE
functions 140
must be specified if SYSTEM(IMS) or SYSTEM(CICS) specified 571
condition handling 226, 228
Enterprise PL/I for z/OS
z/OS UNIX support same as for C++ 93
examples
CEE3CTY and CEEFMDT 186
CEE3CTY, CEEFMDT, CEEDATM 360
CEEDAYS, CEEDATE, CEEDYWK 348
CEEFMON — format monetary string 365
CEEFTDS — format date and time into character string 368
CEEGTST and CEEFRST 182
CEELCNV and CEESETL 371
CEEMOUT, CEENCOD, CEEMGET, CEEDCOD, CEEMSG 321
CEEQCEN and CEESCEN 330
CEEQDTC and CEESETL 374
CEESCOL — compare string collation weight 376
CEESECS and CEEDATM 338
CEESECS, CEESECI, CEEISEC, CEEDATM 344
CEESECS, multiple calls to 335
CEESETL and CEEQRYL 378
CEESTXF and CEEQRYL 381
coding main routines to receive inbound parm list 136, 140
FREE statement 172
guidelines for mixing PL/I and Language Environment storage services 172
interfaces to IMS from 559
list of DLI interfaces 559
link-editing fetchable load modules 25, 26
linked list, building 182
MSGFILE considerations 316
OS PL/I V2R3 math services, using 26
parameter passing style 135
PLIBASE has been replaced 26
PLITASK no longer supported 26
REFER option 172
run-time options, specifying from 119, 127
running in a non-IPT environment 99
SIBMBASE has been replaced 26
SIBMMATH library has been added 26
storage in PL/I AREA 172
sysprint 410
SYSTEM compiler option interactions with NOEXECOPS 571, 572
variables, where stored 172

PLIRETC subroutine
CICS support for 399, 409
PLIRETV intrinsic function
CICS support for 399
PLIST compiler option
argument list format and 567, 568
PLIST runtime option
argument list format and 565, 567
C interface to IMS 415
MVS setting and compatibility 565
POSIX 3, 309
assembler user exit and 422
asynchronous interrupts 230
communication
with COBOL or PL/I 230
condition token
for C-defined signals 282
for POSIX-defined signals 282
default signal action 153
EDC messages 297, 309
facility ID 309
IMS and 416
mapping
Language Environment abends to POSIX signals 219
S/370 exceptions to POSIX signals 218
messages 5201 to 5209 297
MSGFILE runtime option and 311
nested enclaves 525
position in Language Environment environment 4
process termination 152
running applications under Language Environment 3
signal handling
enabling or disabling signals 231, 232
handling, in the condition step 232
ILC considerations 230
signals that bypass condition handling 233
termination step for POSIX signals 233
synchronous interrupts 231
TERMTHDACT application 147
TERMTHDACT behavior under z/OS UNIX 233
using Language Environment services 3
POSIX runtime option 177
POST command 478
PPA (Program Prolog Area) 449, 454
PPT (Processing Program Table) 398
pragma
#pragma runopts
affecting argument list format with 565, 567
CICS and 401
IMS and 415
specifying runtime options with 129
syntax description 121
preinitialization facility
benefits of 482
preinitialization facility *(continued)*
CEEPIPI(add_entry)
function code for 482
return codes from 507
syntax description 507
CEEPIPI(call_main)
assembler user exits and 498
CEEPIPI(init_main) and 497, 498
COBOL STOP RUN and 498
function code for 482
return codes from 499
CEEPIPI(call_sub_addr) 501
function code for 482
return codes from 503
syntax description 502
CEEPIPI(call_sub)
CEEPIPI(init_sub) and 497, 500
CEEPIPI(term) and 506
COBOL STOP RUN and 500, 501
function code for 482
return codes from 501
syntax description 500
CEEPIPI(delete_main_entry) 508
function code for 488
return codes from 509
syntax description 508
CEEPIPI(end_seq) 504
function code for 482
return codes from 504
syntax description 504
CEEPIPI(identify_entry) 509, 510, 511
function code for 488
return codes from 510, 511, 512
syntax description 509, 510, 511
CEEPIPI(init_main)
CEEPIPI(call_main) and 497, 498
CEEPIPI(term) 506
function code for 482
return codes from 490, 492
specifying service routines in 490, 492
syntax description 490, 491
CEEPIPI(init_sub_dp) 495
function code for 482
return codes from 497
syntax description 496
CEEPIPI(init_sub)
CEEPIPI(call_sub) and 497, 500
CEEPIPI(term) and 506
function code for 482
return codes from 495
specifying service routines in 494
syntax description 494
CEEPIPI(start_seq) 504
function code for 482
return codes from 505
syntax description 505
CEEPIPI(term)
CEEPIPI(call_sub) and 506
CEEPIPI(init_main) and 506
CEEPIPI(init_sub) and 506
function code for 482
return codes from 506
syntax description 505
CEESTART 481, 483
CEEXPIT macro 483
CEEXPITS macro 484
preinitialization facility *(continued)*
CEEXPITY macro 484
IGZERRE (COBOL interface to preinitialization) 481
ILBOSTP0 (COBOL interface to preinitialization) 481
old C interface to preinitialization and PLIST(MVS) 565
PIPI table
add entry to 507
CEEPIPI(call_main) and 498
CEEPIPI(call_sub_addr) and 501
CEEPIPI(call_sub) and 500, 501
CEEPIPI(end_seq) and 504
CEEPIPI(init_main) and 490, 492
CEEPIPI(init_sub_dp) and 495
CEEPIPI(init_sub) and 494
CEEPIPI(start_seq) and 504
generate entry within 484
generate heading for 483
identify end of 484
introduction to 482
restrictions against nested routines in 508
service routines for 514
allocating storage for 516
AMODE/RMODE requirements of 514
freeing storage of 517
in CEEPIPI(init_main) 490, 492, 514
in CEEPIPI(init_sub) 494, 514
relationship to each other 514
trapping program interruptions and abends 517
vector format 514
prelinker
CEEXMOD EXEC and 554
constructed reentrancy 141, 142
freestanding MVS routine and 582
functions 540
how it maps L-names to S-names 549
INCLUDE statement and 547
invoking
for TSO 551
LIBRARY statement and 547
prelink options 556
prelinker map 543
RENAME statement and 548
when it has to be used 539
prelinking process 541
preserving in assembler 459
printf() function
default destination 313
interspersing messages into an application 312
process
assembler user exit for termination of 429
current support for 164
definition 163
relationship to enclaves 163
role in Language Environment program management model 166
termination of assembler routines and 443

Processing Program Table (PPT) 398
program
  link-editing using c89 94
  management model
    diagram of 165
    terminology of 163, 165
  placing MVS load modules in the z/OS UNIX file system 95
  running under z/OS UNIX 94
program argument
  specifying with runtime options 123
program interrupts
  abend codes and return codes 158
  condition handling and 196, 198, 199
  q_data for 286
  SORT/MERGE and 588
  under CICS 407, 409
  under SORT/MERGE 588
  user exits and 427
Program Prolog Area (PPA) 449, 454
program specification block (PSB) 415, 417
prolog 449, 454
promote action
  compared to percolate and resume actions 206
  condition handling model and 200
  user-written condition handler syntax for 238
PSB (Program Specification Block) 415
PUT command 478

Q

q_data
  abends 283
  arithmetic program interruptions 286
  descriptor 293
  math and bit-manipulation condition 289
  square-root exception 289

R

R1 macro 564
raise() function for C
  how C terminology differs from that of Language Environment 213
  how C terminology differs from the Language Environment version 213
  SIGTERM
    HLL user exit and 436
random number service CEERAN0 385
READ command 478
reason code
  CEEPIPI(call_main) and 499
  CEEPIPI(call_sub) and 500
  in user exits 427, 429
  summary of Language Environment codes 156
  under CICS 408
recursion
  allowed in user-written condition handlers 238
  Language Environment program management model and 164
reentrancy
  advantages of 141
  C routines and
    constructed reentrancy 141
    natural reentrancy 141
    procedure for generating reentrant load modules in 142
    reentrant routines split into two parts 142
  C Systems Programming Environment and 581
  CEEPIPI(call_main) and 484
  CICS routines and 141
  COBOL RENT compiler option and 142
  Fortranreentrancy separation tool 142
  IMS and 417
  making Fortran programs reentrant 142
  modified CEEBXITA must be reentrant 427
  MVS link pack area (LPA) and 143
  PL/I REENTRANT compiler option and 143
  pre-loaded IMS routines and 141
  prelinker and 141, 142
  routines that must be reentrant 141
region (CICS) 397
RENAME control statement
  how prelinkage utility maps L-names to S-names 549
  syntax and usage notes 548
RENT compiler option
  making C routines reentrant with 142
  making COBOL programs reentrant with 142
  prelinker must be used when C source file compiled with 539
resume
  action
    definition 206
    severity 2 or above IGZ conditions and 220
    user-written condition handlers and 220, 237
  cursor
    nested conditions and 239
return code
  calculation 154
  CEEAUE_RETC field of CEEBXITA and 429
  CEEPIPI(call_main) and 499
  CEEPIPI(call_sub) and 500
  Fortran considerations 154
  in user exits 429
  possible C enclave return code incompatibility 153
  RETURN-CODE special register 154
Return Code= nnn 304
Return Code=-1 302
Return Code=0005 302
Return Code=0006 302
Return Code=0007 302
Return Code=0008 302
Return Code=0009 302
Return Code=0010 302
Return Code=0011 302
Return Code=0020 303
Return Code=0021 303
Return Code=0028 303
Return Code=0040 303
Return Code=0044 303
Return Code=0048 303
Return Code=0052 303
Return Code=0056 303
Return Code=0060 303
Return Code=0064 303
Return Code=0068 303
Return Code=0072 303
Return Code=0076 304
Return Code=0080 304
Return Code=0084 304
Return Code=0088 304
Return Code=0092 304
Return Code=0096 304
Return Code=0098 304
Return Code=0100 304
Return Code=0104 304
Return Code=0108 304
Return Code=0112 304
return() 487
RMODE
  C/C++ considerations 14
root
  segment 443
RPTSTG runtime option 172
  storage report generated by
    using to tune the stacks 171
RTEREUS runtime option
  preinitialization and 481
run unit
  for CICS 398
  for COBOL
    relationship to Language Environment enclave 164
runtime environment, introduction 4
runtime options
  how nested enclaves get
    enclaves created by C system() 530
    enclaves created by EXEC CICS commands 526
    enclaves created by SVC LINK 528
  in the CEEPIPI interface to preinitialization 494, 498
  in the user exit 426, 431
  specifying 119, 127
    order of precedence 122
    with program arguments 123

S

S-names
  prelinker and
    how L-names are mapped to S-names 549
saved segments
  CEEPIPI and 490, 492, 494
SCEELKED link library
  automatic call library and 74

SCEELKED link library *(continued)*
cataloged procedures and
CEEWG 108
CEEWL 109
CEEWLG 109
changing library prefix of 116
MVS linkage editor procedures and 72, 74
MVS load procedures and 78, 80
TSO load/run procedures and 89
SCEERUN load library
CEEWG cataloged procedure and 108
CEEWLG cataloged procedure and 109
MVS load procedures and 78
TSO run procedures and 87
SCEESAMP sample library 409
search order
library for MVS 81
Search Order 81
sending comments to IBM xxi
service routines
allocating storage for 516
AMODE/RMODE requirements of 514
freeing storage of 517
in CEEPIPI(init_main) 490, 492, 514
in CEEPIPI(init_sub) 494, 514
relationship to each other 514
trapping program interruptions and abends 517
vector format 514
SETRP command
CEEHDLR callable service and 476
CEEHDLU callable service and 476
CEESGL callable service and 476
table of equivalent Language Environment services 476
severe
error message 308
severity
of a condition
CEEBXITA assembler user exit and 430
COBOL condition handling 220
condition token and 274
ERRCOUNT runtime option and 201
how to determine in a message 201, 308
TERMTHDACT runtime option and 204
unhandled conditions and 156, 201
short-on-storage condition 404
shortcut keys 599
SIGABRT
HLL user exit and 436
SIGTERM
HLL user exit and 436
slash (/)
specifying in PARM parameter 79
SNAP
CEE3DMP callable service and 478
table of equivalent Language Environment services 478
SORT/MERGE
condition handling within 588, 591
overview of sort/merge operations 587, 588, 589
user exits triggered by 588
stack
frame 169, 172
condition management model and 199
differentiated from Global Error Table model of condition handling 211
getting 195
HLL-specific condition handlers and 206
stack frame zero 200, 205, 220
user-written condition handlers and 205
storage
Language Environment program management model and 165
Language Environment stack storage model 170
RPTSTG runtime option and 171
tuning 171
stack and heap storage 169
STACK runtime option 171
using with RPTSTG to tune the stack 171
standard streams 313
static data 443
STAX command
CEEHDLR and 476
CEEHDLU and 476
CEESGL and 476
table of equivalent Language Environment services 476
stderr
default destinations of 312
STIMER command 478
STOP RUN
effect SVC LINK has on 478, 480
in a preinitialized environment 487
relationship to CEEPIPI(call_main) 498
STOP statement
for COBOL
CEEPIPI(call_sub) and 500, 501
in a preinitialized environment 487
storage
management model 169, 187
heap storage 172, 187
heap storage leaks 174
stack storage 170, 172
manager 169
operating system services for 476, 478
service routines for 514
STORAGE built-in functions 406
storage tuning user exit 120, 122
subroutine
assembler
examples using 473
register values of 441
position in Language Environment program management model 164
subroutine *(continued)*
preinitialization and 482
restriction regarding nested enclaves 525
success, testing a condition token for 272
summary of changes xxiii
Summary of changes xxiii
SVC LINK 478, 480, 525, 528
switching 459
symbol information 577
symbolic feedback code 275, 281
syntax diagrams
how to read xvii
SYSLIB
linkage-editor and 72, 74
loader and 78, 80
SYSLIN
linkage-editor and 72, 73
loader and 78, 80
SYSLMOD 72, 73
SYSLOUT
linkage-editor options and 77
loader and 79, 80
SYSOUT
default destinations of MSGFILE runtime option 310
SYSPRINT
linkage editor and 73
loader and 79, 80
SYSRCS 155
SYSRCT 155
SYSRCX 155
system programming facility, C 579, 583
benefits of 579
building freestanding applications 580, 582
persistent C environments 583
reentrant modules 581
summary of functions 583
system exit routines 583
user-server environments 583
SYSUT1 73

T

TCB
driven 422
initialization of first enclave 422
termination of first enclave 422
nested enclaves and 422
termination 204
causes under Language Environment 150
CEETERM macro and 452
enclave
as indicated in CEEAUE_ABND field of CEEAUE_FLAGS 430
as indicated in CEEAUE_ABTERM field of CEEAUE_FLAGS 430
CEEBXITA behavior during 426
CEEBXITA function codes for 429
terminating enclave created by an assembler routine 443
terminating enclave created by CEEBINT HLL user exit 436
preinitialized routines and 482

termination *(continued)*
process
CEEBXITA behavior during 426
CEEBXITA function code for 429
terminating process created by assembler routine 443
TERMTHDACT runtime option and 204
thread 203
termination imminent step
discussion of 202, 205
TERMTHDACT runtime option
condition message and 201
POSIX runtime option and 233
termination imminent step and 204
TEST runtime option
condition handling model and 205
thread
IMS and 416
role in Language Environment program management model 165
TIME command
Language Environment date/time services and 478
table of equivalent Language Environment services 478
trademarks 605
translator (CICS) 399, 408
TRAP runtime option
ABPERC runtime option and 199
CEEBXITA assembler user exit and 409
abends that occur in CEEBXITA and 427
using with CEEAUE_A_AB_CODES to percolate a list of abend codes 427
CICS condition handling and 407
errors occurring in CEEBXITA and 427
how CEEAUE_ABND is affected by 430
nested enclaves and
enclaves created by C system() 531
enclaves created by EXEC CICS LINK or EXEC CICS XCTL 527
enclaves with a C or assembler main, created by SVC LINK 528, 529
enclaves with a COBOL main, created by SVC LINK 529
enclaves with a PL/I fetchable main 531, 532
TSO (Time Sharing Option)
running for
ALLOCATE command and 87, 89
CALL command and 87, 88
LOADGO command and 88, 89
specifying runtime options for 87, 88, 89, 120

U

user
exit
assembler 427
for initialization 426, 486
for termination 425, 426, 486
HLL 435
system exits in C Systems Programming Environment 583
under CICS 429, 430
under SORT/MERGE 588
heap (initial heap)
heap storage model and 176
return code
C language constructs that generate 154
COBOL language constructs that generate 154
Fortran language constructs that generate 155
PL/I language constructs that generate 155
user comments 577
user interface
ISPF 599
TSO/E 599
user-server environment 583
user-written condition handler
allowing nested conditions in 239
as opposed to condition manager 205
C raise() function and 212, 213
C signal() function and
terminology differences between C and Language Environment 213
CEESGL callable service and 198
coding 235, 238
examples 241, 270
EXEC CICS commands that cannot be used with 407
in ILC applications 239
in nested condition handling 239
in SORT/MERGE condition handling 588
registering with CEEHDLR 205
role in Language Environment condition management model 205
syntax for 236
TRAP runtime option and 198
USRHDLR runtime option and 238
USRHDLR runtime option
description 238

V

variables 44
exported 44
vector instruction exceptions 224

W

WAIT command 478
warning error message (severity 1) 308
working storage 164
writable static
handled by prelinker 540
writable static *(continued)*
writable static map 543
WRITE command 478
WTO command
CEEMOUT callable service and 478
table of equivalent Language Environment services 478

X

XCTL command 478
XITPTR 427
XPLINK (Extra Performance Linkage) 29
CEEXR cataluged procedure 110
definition 29
downward-growing stack 31
glue code 31
guard page 31
how to enable 37
libraries 9
SCEEBIND 9
SCEELIB 9
non-XPLINK application 31
parameter passing 36
register conventions 35
runtime option 37
stack overflow 34
when it should be used 36
when it should not be used 36
XPLINK application 31
XPLINK environment 31
XPLINK stack 31
XPLINK stack frame layout 32
XUFLOW runtime option
using to manipulate the PSW 199

Z

z/OS UNIX 152, 153, 177
24-bit AMODE programs, restriction on using 95
c89 utility
-c option 94
-o option 94
using 94
environments supported 93
environments, application program
shells through MVS batch 95
TSO/E 95
link-editing
C applications 93
Fortran applications 93
linking and running, basic 93
MVS application program load module
placing in file system 95
shells through MVS batch 95
parent and child processes 152
PL/I MTF application support 101
PL/I support in a non-IPT environment 99
position in Language Environment environment 4
POSIX default signal action 153
POSIX process termination mapping 153

z/OS UNIX *(continued)*
prelinking under 93
process termination 152
running
applications under Language Environment 3
C application program for MVS batch 96
C applications 94
Fortran applications 93
from the z/OS UNIX shell 95
PL/Iapplications in a non-IPT environment 99
PL/IMTF applications 101
using BPXBATCH program 96
services 93
storage considerations 177
TERMTHDACT application 147
using Language Environment services 3

Product Number: 5650-ZOS

Printed in USA

SA38-0682-01